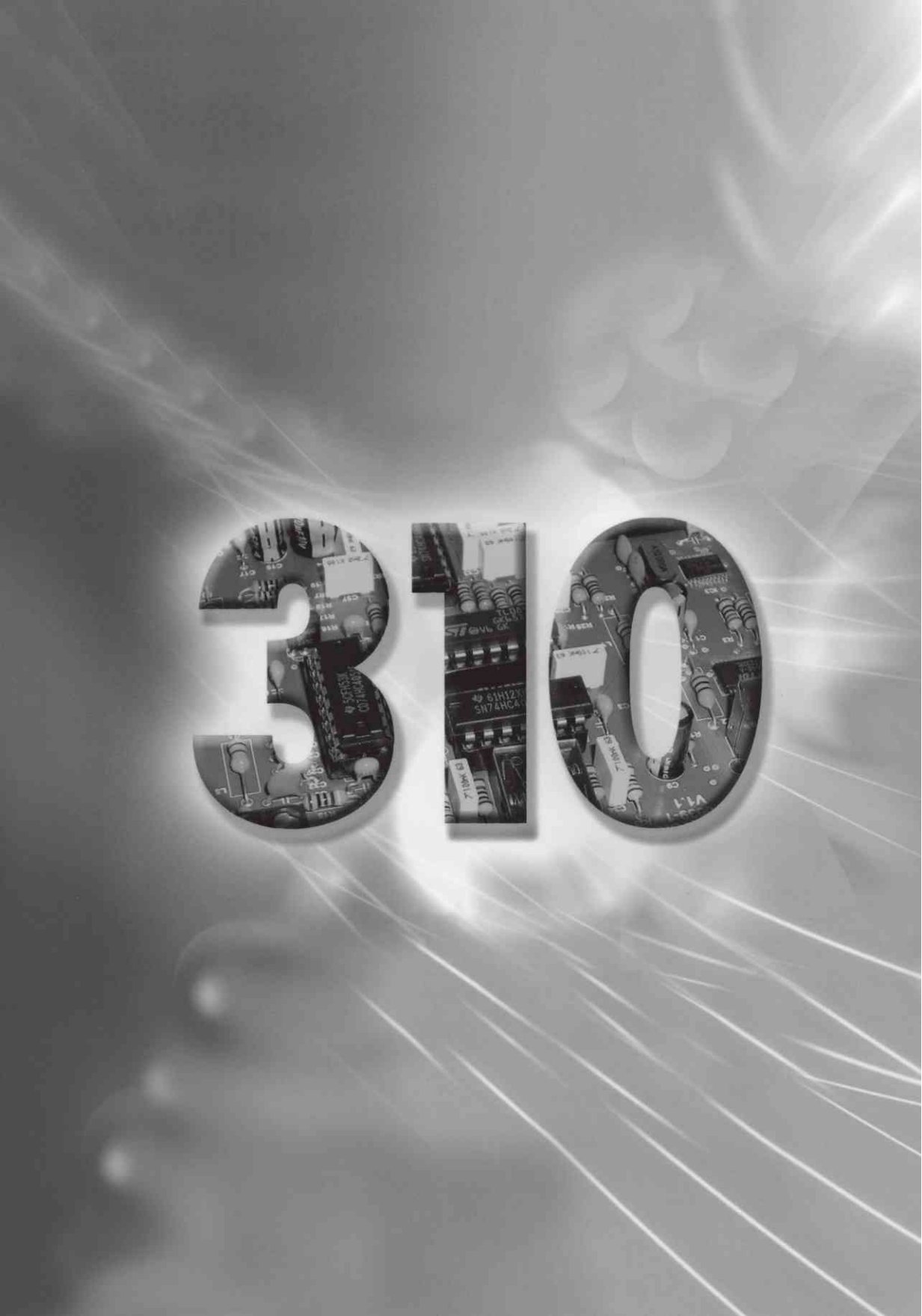
310

310 Circuits

creative solutions for all areas of electronics

Elektor International Media BV
P.O. Box 11
6114 ZG Susteren
The Netherlands
www.elektor.com

All rights reserved. No part of this book may be reproduced in any material form, including photocopying, or storing in any medium by electronic means and whether or not transiently or incidentally to some other use of this publication, without the written permission of the copyright holder except in accordance with the provisions of the Copyright, Designs and Patents Act 1988 or under the terms of a licence issued by the Copyright Licensing Agency Ltd, 90 Tottenham Court Road, London, England W1P 9HE. Applications for the copyright holder's written permission to reproduce any part of this publication should be addressed to the publishers.

The publishers have used their best efforts in ensuring the correctness of the information contained in this book. They do not assume, and hereby disclaim, any liability to any party for any loss or damage caused by errors or omissions in this book, whether such errors or omissions result from negligence, accident or any other cause.

British Library Cataloguing in Publication Data
A catalogue record for this book is available from the British Library

ISBN 978-0-905705-78-1

Prepress production: E. A. J. Bogers
First published in the United Kingdom 2009
Printed in the Netherlands by Wilco, Amersfoort
© Elektor International Media BV 2009

089018/UK

Table of Contents

Actuators

12 V Bidirectional Motor Control 341
3 Amp PWM DC Motor Controller 446
Catapult for Robots... or Other Uses 389
Complete Stepper Motor Driver 405
Controlling Servos 486
Driving Higher Power DC Motors 510
Driving Stepper Motors 530
Driving Stepper Motors: KISS 351
From Cassette Recorder to Robot Propulsion 515
MotoBox 424
PIC Indicator Relay 377
PIC12C508 Stepper Motor Controller 497
Robot Footballer 464
Servo to Motor Conversion 480
zBot: 10-A Power Stage 492

Audio, Video & Photography

Automatic S/PDIF Selector 142
Auto-off for Audio Gear 129
BBC Radio-MP3 for Seniors 85
Camera = Data Store 44
DC-coupled Audio Amplifier 49
Five-output Video Distribution Amplifier 104
Hybrid Headphone Amp 158
ISO Standard for Car Radios 234
Multimedia RIAA Preamplifier 34
Paraphase Tone Control 282
Phantom Supply for TV Antenna 40
Phono Splitter 224
Play the Guitar – Recycle Tip 68
Simple Audio Power Meter 196
Simple Hybrid Amp 204
Simple Slave Flash 281
Slave Flash trigger I 63
Slave Flash Trigger II 131
Stepped Volume Control 495
TV Muter 185
Video Isolator 231
Wireless Audio Transmitter 99

Communications

2.4 GHz Antenna for Robotics Vehicles 418
IR Communications using a UART 438
IR Remote Control with the R8C 346
Radio Remote Control for PDAs and Smartphones 401
Receiver for RC5 Remote Controls 483
Removed Pulse Detector 452
Robot Voice 384
zBot: Wireless Link 523

Computers & Internet

Assistance for BASCOM Programmers 315
Computer Off Switch 22
Delphi Floating Strings 338
Expansion for Universal Interface 155
Hard Disk Switch 114
Mobile Phone Data Cable = Interface Converter 125
Multicolour HD LED 304
SCSI Adapter 80
Serial to Bluetooth 82
Simulation Applets 265
Speed Pulse Generator for PC Fans 89
USB Fuse 210
USB Standby Killer 140
USB/RS232 Cable 61
USB Switch for Printers 262

Hobby & Modelling

123 game – all MCU-free 66
Automatic Windshield Washer Control 258
Bicycle Speedometer with Hub Dynamo 15
Binary Clock 307
Deluxe '123' Game 182
Design for Märklin Light Signals 264
Direction-sensitive Light Barrier 328
Discrete Robot 332
Fog Lamp Switch 303
Golf Tally 254
Intelligent Interface for 1 to 8 Servos 161
Intelligent Presence Simulator 163

Lamp in a Wine Bottle 238
LED Spinning Top 228
Logic Goats 293
Model Railway Turnout Control 77
Multi-colour Flashing LED 216
New KW1281 Interface 230
Pitch Meter for Model Helicopters 106
Preset Circuit for Servos 252
Programmable Servo Driver 145
Pseudo-random Glitter 90
PWM Control for Permanent Magnet Motors 239
Radio Control Signal Frame-rate Divider 193
RC Servo Tester/Exerciser 169
RC Switch 317
Reaction Race using ATtiny13 33
Rear Fog Lamp for Vintage Cars 197
Recycling Flasher Lights 313
RGB Lights 275
Servo Control 270
Simple One-wire Touch Detector 191
Simple Slave Flash 281
Smooth Flasher 171
Stepper Motor Controller 174
Tent Alarm 50
Tiny RGB 36
Tiny Simon 322

Home & Garden

Alternative Halogen Supply 87
Automatic Range Hood 208
Bell Alarm 88
Call Acknowledged! 255
Direction Sensitive Light Barrier 199
Earth Fault Indicator 310
Easy Home Remote Control 45
Environmentally-friendly Mosquito Repeller 215
Flowcode for Garden Lighting 11
FL Twilight Switch 273
Gentle Breeze 178
Hard-Wired Code Lock 172
Intelligent Presence Simulator 163
Laser Alarm 120
LED Phototherapy Unit 192
Light Gate with Counter 338
Lighting Governor 304
Mains Indicator 323
Mains Slave Switcher I 97
Mains Slave Switcher II 248
Modulated Light Barrier 236
On/off Infrared Remote Control 240
Outside Light Controller 251
Pipe Descaler 134
Post-box Monitor 35
Presence Simulator 32
Protection for Telephone Line 165
Put that Light Out! 111
RC Mains Sockets with Feedback 296
Remote Control Mains Switch 186
RFID Door Opener 152
Slug Repellent 71
Smart Chocolate Block 320
Solar Lamp using the PR4403 272
Solar Powered Automatic Lighting 212
Telephone Ringer 302
Temperature Sensitive Switch for Solar Collector 245
Temperature Switch 65
Tent Alarm 50
Thunderstorm Predictor 221
Toothbrush Timer 268
Tracking Solar Panel 95
Underwater Magic 56
Universal Thermostat 288
ZigBee Switching for Remote Control 301
ZigBee-based Wireless Motion Sensor 279

Mechanics

Antieu-robot 345
Babybot 383
Bolo 399
DIY Wheels 532
Hunter 413
Minimalist Motor 364
Robot MOPS 436
Torque is Cheap 467
Trembly 366
TriBot 450

Microcontrollers

84×48-pixel Graphics Display 276
89LPC9xx USB Programming 183
Contrast Control for LCDs 52
DTMF-controlled Home Appliance Switcher 19
E-blocks = cheaper PLC design 287
GPS Receiver 73
How to! connect your project to the PC 124

Low Cost USB Demo Board 393
LPC900 Programmer 407
Multitasking Pins 237
Optimised STK200/300 Programmer 505
Programmer Board for the R8C/13 41
Programming the Propeller IC 284
Propeller Prototyping Board for BoeBot 378
R8CKey 242
Reaction Race using ATtiny13 33
Satnav for Robots 430
Serial Interface for the Propeller 448
Servo Control from a PC 526
SimpleProg 209
Simple USB AVR-ISP Compatible Programmer 113
'TEAclipper' Postage-stamp Programmer 342
Tiny RGB 36
Turbo BDM Lite ColdFire Interface 223
Universal LCD Module 92
Universal Thermostat 288
Which Brain for my Robot? 353

Miscellaneous Electronics & Design Ideas

10,000× with One Transistor 227
A Robot with an Elephant's Memory 371
Attitude Sensor 327
Audible Flasher Warning 144
Automatic Windshield Washer Control 258
Chaotic LED Fireflies 348
Charlieplexing 39
Clap Controlled Switcher 385
Colour Tamer 420
Electronic Touch Switch 105
Fog Lamp Sensor 150
Football with Robots 528
Formula Flowcode Buggy 439
High-intensity LED Warning Flasher 25
Indicator for Weller Soldering Stations 83
ISO Standard for Car Radios 234
KiCad: a High-level Tool 533
Logic Goats 293
Magnetic Flip-Flop 160
Miller Capacitor 63
Mini High-voltage Generator 179
Multi-colour Flashing LED 216
Mysterious Self Charging 295
New Lego Mindstorms NXT Motor Block 403
Philips ME Construction Kits 469
Piezo-powered Lamp 48
PR4401/02 off the Beaten Track 176
PWM Control for Permanent Magnet Motors 239
Rear Fog Lamp for Vintage Cars 197
Recycling Flasher Lights 313
Simple Capacitive Touch Sensor 129
Simple LED Bike Light 247
Simple One-wire Touch Detector 191
SMD Crystal Adapter 139
SMD Soldering Aid 336
Smooth Flasher 171
Solar Lamp using the PR4403 272
Stepped Volume Control 495
Stroboscope with Trigger Input 119
The Gentle Touch 207
The OC171 Mystery (solved) 285
Thrifty 2-Hz Clock 333
Thrifty LED Protector 117
Walking Works! 455

Power Supplies, Batteries & Chargers

12V Fan Directly on 230 V 198
3-A Wide-input Adjustable Switching Regulator 343
48-V Microphone Supply 13
Adjustable Current Limit for Dual Power Supply 54
Alternative Halogen Supply 87
Automatic Car Battery Charger 78
Battery Discharge Meter 27
Battery Saver 271
Car & Motorcycle Battery Tester 300
Cheap 12 V/230 V Invertor 259
Cigarette-lighter Battery Charger 156
Deep Discharge Protection for Rechargeable Cells 449
Dimmable LED Light 203
Driver for 20 LEDs 141
Dual Battery 396
Earth Fault Indicator 310
Energy-efficient Backlight 244
Fast Charger for NiMH Batteries 493
Fuse Saver 180
Gratis Symmetrical Opamp Supply Voltages 306
High-voltage Regulator with Short Circuit Protection 126
Hyper-simple Battery Capacity Tester 250
LDO Regulator with Soft Start or Tracking 411

LED Switching Regulator 194
LiPo Manager 262
Lithium Charger 465
Low Loss Step Down Converter 266
Low-Voltage Step Down Converter 274
Measuring Battery Charge 319
Mini Bench Supply 166
Mini High-voltage generator 179
Mini Power Inverter 363
Multi-purpose NiCd & NiMH Charger 517
Paralleling LiPo Batteries 435
Phantom Supply for TV Antenna 40
Power MOSFET Bridge Rectifier 232
Power Supply for USB Devices 335
PR4401/02 off the Beaten Track 176
PWM Voltage Dropper 489
Quad Power Supply for Hybrid Amp 23
Simple Li-Ion Battery Charger 335
Solar Cell Array Charger with Regulator 16
Solar Cell Voltage Regulator 299
Solar Lamp using the PR4403 272
Solar Powered Automatic Lighting 212
Solar Powered Battery Charger 115
Solar Powered Uninterruptible PSU 188
Step Down Converter Controller 291
Switch-Mode 555 Supply 482
The Gentle Touch 207
Tracking Solar Panel 95
USB Converter 503
USB Fuse 210
Voltage Regulator Calculation 334
Voltage Stabiliser 382
zBot: Solar/Battery Power Supply 506

RF (radio)

Active Antenna 108
Antenna Height and Range 190
DCF77 Preamplifier 44
Detector with Amplification 226
DRM Receiver Upgrade 147
Harmonic Generator with Single Opamp 60
Opamp VHF FM Transmitter 17
Software-defined Valve Radio 133
Thunderstorm Predictor 221
Wireless Audio Transmitter 99

Sensors

A/D Converter for Robots 462
An Inclinometer for your Robot 386
An Obstacle Detecting Robot 374
A Robot that won't Lose its Bearings 421
Attitude Sensor 327
Bat's Ear 524
CMUCam1 Vision System 458
CO Sensor 496
Compass Sensor
for Lego Mindstorms NXT 478
Discrete Robot 332
IR Close Object Detector 349
IR Telemeter 507
Light-seeking Robot 520
Light Sensing with an LED 490
Overheat Detector Alarm/Switch 523
PIR Sensor 514
Positioning with Photodiode Arrays 501
Sensor for Line Following Robots 340
Simple D/A Converter for Robots 500
Sound Activated Switch 513
Stereo Robot Ears 471
Ultrasonic Distant Obstacle Detector 485
Whiskers on Robots 444
Wireless Pulse Sensor 404

Test & Measurement

1-Wire Thermometer with LCD 101
22-bit A/D Converters 241
Active Rectifier 121
Automatic Range Switching 257
Car & Motorcycle Battery Tester 300
Digital Rev Counter for (Older) Diesels 135
Discrete PWM Generator 173
Eight-channel Scope Input 111
Electronic Torricelli Barometer 26
Expansion for Universal Interface 155
Gas Flow Meter 201
Geiger Counter 150
Hyper-simple Battery Capacity Tester 250
Increased Range for DVM 12
IR Remote Control Tester 273
LED Tester 82
LED Thermometer 325
LM35 to ADC 311
Microlight Fuel Gauge 217
Minimalist Oscilloscope 53
Multimeter as Lightning Detector 128
New KW1281 Interface 230
Operating Hour Counter 37
Optical Pulse Generator 69
Portable Thermometer 294

Simple Audio Power Meter 196
Temperature Sensor
with 2-Wire Interface 297

Tips & Tricks

Balancing Robot 367
DIY Wheels 532
R8C Measures Negative Voltages 453

Appendices

A Electrical Safety 539
B Contents A...Z 541

001 Flowcode for Garden Lighting

HOME AND GARDEN

Jan Middel

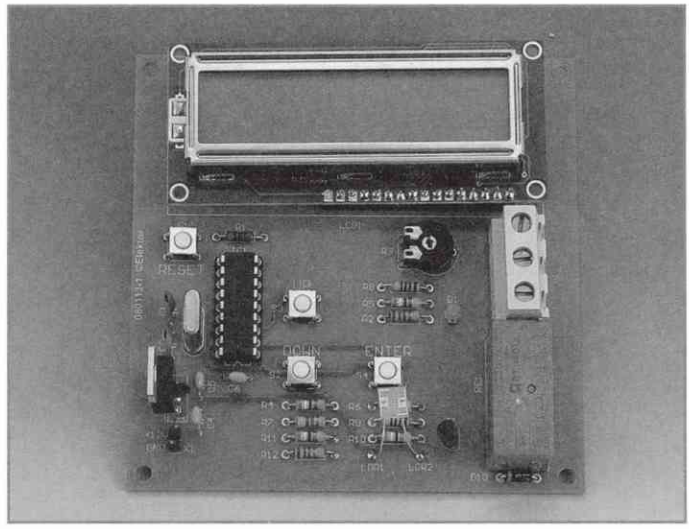

Flowcode is well known from the many 'Eblocks' projects that have been published by Elektor over the last few years. This year's Summer Circuits also has a project that is programmed using Flowcode. The circuit presented here uses a microcontroller programmed with Flowcode to turn garden lights on and off at user-definable times.

At the hart of the circuit is a PIC16F88 microcontroller. It uses a 2 line by 16 character display to show the settings. These can be adjusted using a set of three push buttons. Potentiometer P1 is used to adjust the contrast of the display. Output RA3 of the PIC is

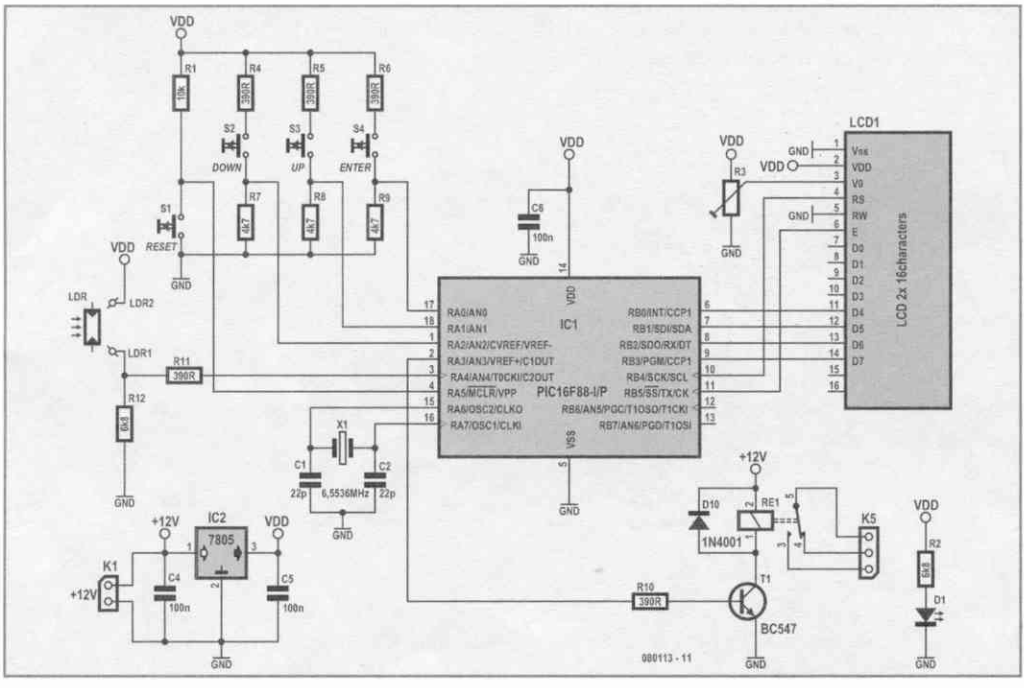

used to drive transistor T1, which in turn drives a relay that turns the lights on and off. The supply voltage is stabilised using a standard 7805 voltage regulator IC. S1 is the reset switch, which is connected to the MCLR input of the PIC. MCLR should be 'high' during normal operation (and 'low' for a reset). Hence this input has been connected to the positive supply voltage via pull-up resistor R1.

A program has been written in Flowcode that activates the relay when the following conditions apply:

- when it is later than 16:00;
- when the amount of light reaching the LDR is less than an adjustable threshold;
- during the morning between seven and eight o'clock;

At night the relay is turned off at 23:00 (except on Friday, Saturday or Sunday, when the lights stay on one hour longer).
During the day the display shows at what time the garden lights were last turned on.

The following procedure should be used to set the time: press the Reset switch; the program then shows a welcome message. Next, press the Enter switch. Use the Up and Down switches to set the correct value for the hours. Press the Enter switch to set the minutes (in the same way as for the hours). After pressing Enter again, you are asked for a value for the light threshold. This value is compared with the amount of light falling on the LDR. When the value of the LDR becomes less than the threshold the lights come on.
Another press of the Enter switch takes you to the day-of-week setting. This determines the days when the light stays on for longer at night. A final press of the Enter switch then starts the clock.

It is of course possible to modify the software in certain places. You could for example change the time at which the lights come on in the morning. This function could even be removed completely if you have no need for it.

(080113-I)

Downloads
The Flowcode (.fcf) file for this project, 080113-11.zip, is available on the Elektor website as a free download, as is the layout for the printed circuit board (080113-1.zip).

002 Increased Range for DVM

TEST AND MEASUREMENT

Voltmeter modules are readily available, both as LCD- and LED-versions. A disadvantage of these modules is the standard measuring range of 200 mV DC. So, with such a module you can only measure DC voltages up to 0.2 volts. Fortunately it is not difficult to increase the measuring range to higher voltages. In addition, it is also possible to measure current with these modules.



In order to measure higher voltages we have to reduce the voltage with a potential divider. For this purpose we add R1 and R2. R1 is connected in series with the + input of the module and R2 is connected in parallel with the inputs. In the table we can see the correct ra-

tios of R1 and R2. These modules typically have an input impedance of more than 10 MΩ. With the attenuator in front of it the input impedance reduces to 1 MΩ, still high enough for most measurements.

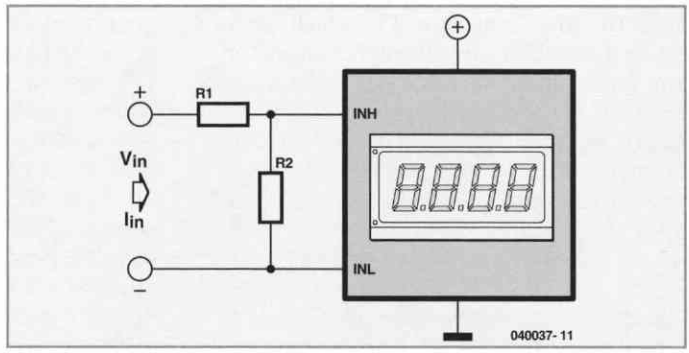

To measure current with a voltmeter we first have to convert the current into an equivalent voltage. Resistor values for doing this are also shown in the table.

	Range	R1	R2
V_{in}	2 V	910 k	100 k
	20 V	1 M	10 k
	200 V	1 M	1 k
	2000 V	1 M	100 Ω
I_{in}	200 μA	0 Ω	1 k
	2 mA	0 Ω	100 Ω
	20 mA	0 Ω	10 Ω
	200 mA	0 Ω	1 Ω

In contrast with the input impedance of a voltmeter, the input impedance of a current meter needs to be as low as possible. The input impedance of this circuit depends on the range and is practically identical to the value of R2. As a consequence, keep in mind that there is a voltage drop across the meter of up to 0.2 V. When making measurements you have to take into account that lethal voltages can be present in the circuit, particularly with the 200-V and 2000-V ranges.
In addition, the specifications of your ordinary, common or garden resistor do not permit these kinds of voltages. When measuring these high voltages suitable resistors need to be used.
(040037-1)

003 48-V Microphone Supply

POWER SUPPLIES, BATTERIES AND CHARGERS

Joseph Kreutz

48 V 'phantom' powering has become the standard for professional condenser microphones. The supply (or rather bias) voltage is applied over both wires of the balanced screened cable via two 6kΩ8 resistors (see reference [1]) – the absolute value is not critical, since a variation of ±20% is permitted, but they must be matched to an accuracy of 0.4% or better [2].

Many microphones are fitted with an output transformer, and derive their power from a centre tap on the secondary. If the currents supplied by the two wires of the balanced line, which flow in opposite directions through the two halves of the secondary winding, are not identical, the magnetic fluxes they induce in the core of the transformer do not cancel out properly, and spurious magnetization occurs, causing distortion and a reduction in the microphone's dynamic range.

With an output current of 0.4 A, the PSU described in this article can 'supply' at least 40 microphones. The mains voltage is applied to a 30 VA transformer which supplies 24 V_{rms}. Its secondary feeds a voltage doubling recti-

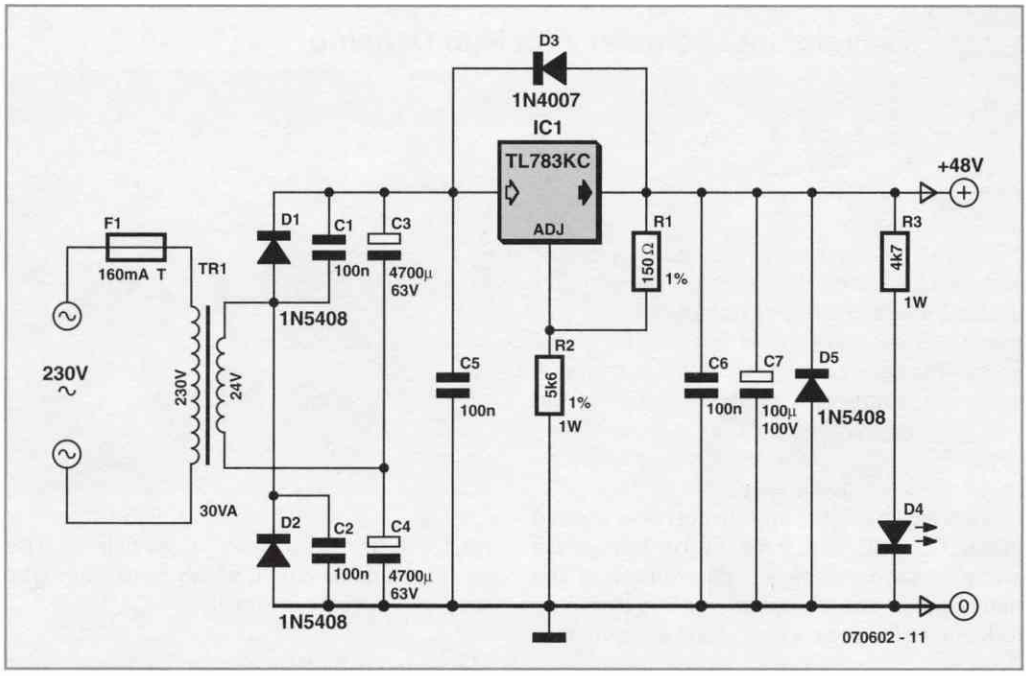

fier formed by diodes D1 and D2 and capacitors C3 and C4. Capacitors C1 and C2 suppress the switching noise produced by the rectifier diodes. This voltage-doubling rectifier provides around 72 VDC, and so offers an adequate margin to allow for ±10% fluctuations in the mains voltage.

Voltage regulation is taken care of by TL783KC regulator IC1 on which an abundant amount of information may be found at [3]. Basically, this is an adjustable regulator in a TO220 package that offers excellent residual ripple and low noise on its output voltage.

The TL783KC regulator includes a MOS series pass transistor and accepts an input voltage of up to 125 V, making it an ideal candidate for this application. Diodes D3 and D5 respectively protect the PSU against transients at switch-off and reversed polarity.

The output voltage is set by resistors R1 and R2 according to the formula:

$$V_{out} = V_{ref} \cdot \left(1 + \frac{R2}{R1}\right)$$

where reference voltage $V_{ref} = 1.27$ V.

These resistors should preferably have a tolerance of 1%, and R2 is likely to dissipate 0.5 W. Resistor R3 provides a minimum load that is vital for maintaining the PSU's off-load voltage at 48 V, and is also used to supply LED D4. If the LED is not used, R3 must without fail be connected to ground.

Last but not least, regulator IC1 must be mounted on a heatsink with a thermal resistance of less than 1.5 °C/W using the standard insulating kit: top-hat insulating washer, mica washer, and heat sink compound... make sure you use enough, but not too much!

(070602-I)

Bibliography and Web Links

[1] Microphone Essays, p. 83. Jorg Wuttke, *www.schoeps.de/E-2004/miscellaneous.html* (11 MB document in German, downloads via links at bottom of page)
[2] DIN EN 61938 standard
[3] *http://focus.ti.com/docs/prod/folders/print/tl783.html*
[4] *http://en.wikipedia.org/wiki/Phantom_power*

004 Bicycle Speedometer with Hub Dynamo

HOBBY AND MODELLING

Hans Michielsen



The idea for this circuit came when the author had problems with the wireless speedometer on his bicycle. Such a device consists of two parts: the cycle computer itself and a transmitter that is mounted on the front fork. A small magnet is attached to the spokes so that the transmitter sends out a pulse for every revolution of the wheel (as long as everything has been fitted properly).
Since the range of the transmitter is limited (about 75 cm), you'll be lucky if it works straight away. And when the voltage of the battery starts to drop you can forget it. The following circuit gets round these problems.

A Shimano NX-30 hub dynamo has 28 poles. This results in 14 complete periods of a 6 V alternating voltage per revolution (when loaded by a lamp; under no load the voltage is much higher). C1, C2, D1 and D2 double the voltage of the AC output. Regulator IC2 keeps the voltage to the transmitter and the divider IC at a safe level (12 V, the same as the original battery). The divider chip (IC1) divides the frequency of the signal from the dynamo by 14, so that a single pulse goes to the transmitter for every revolution of the wheel. This pulse enters the circuit at the point where the reed contact was originally.

The circuit is built inside the front light, since it has enough room and a cable from the dynamo is already present. The distance to the cycle computer is smaller as well in that case.
The following tip can be used if you want to save yourself a few components. In the author's prototype the counter divided by 16 and the setting for the size of the wheel was adjusted to 16/14th of the real size in the setup of the cycle computer. In that case you can leave out D4, D5 and D8.

(060166-1)

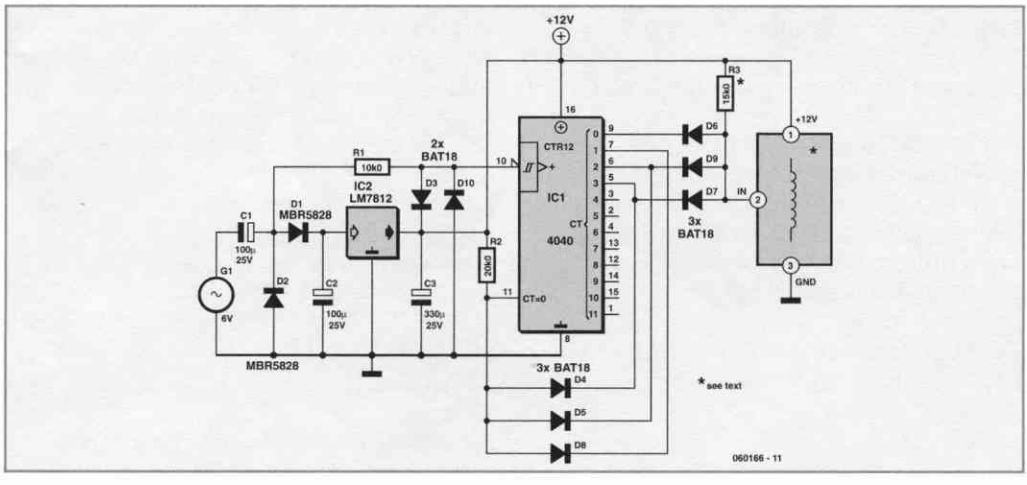

005 Solar Cell Array Charger with Regulator

Lars Näs

This simple circuit can be used to charge batteries from a solar cell array. The circuit consists of an oscillator, a DC-DC step-up or 'boost' converter and a regulator that provides regulation of the output voltage.

The oscillator is built around a hex Schmitt trigger inverter IC, the 40106B. One resistor, R1, is inserted between the input and the output of one of the gates in the 40106 to supply charge to C3. Depending on the values of resistor R1 and capacitor C3 you're using in the circuit, the oscillator will operate at different frequencies, but a frequency below 100 kHz is recommended.

By consequence, the oscillator frequency should not exceed the maximum ripple frequency of capacitor C2 connected on the output. C2 should be an electrolytic capacitor with a DC working voltage larger than the desired output voltage. Besides, it should have a low ESR (equivalent series resistance).
IC1A is used as a buffer, ensuring that the oscillator sees a light, fairly constant load and so guaranteeing that the output frequency remains stable (within limits, of course). V_{CC} of the Schmitt trigger can be connected directly to the battery charged, provided the charged battery voltage does not exceed the max. or min. limits of the Schmitt trigger's supply voltage. This ensures the Schmitt trigger can operate even if little power is obtained from the solar cell array.

When transistor T2 is turned on, (output from oscillator buffer IC1A is high), a collector current flows through inductor L1 which stores the energy as a magnetic field and creates a negative voltage V_{L1}. When transistor T2 is switched off, (output from oscillator buffer IC1A is low), the negative voltage V_{L1} switches polarity and adds to the voltage from the solar cell array. Consequently, cur-

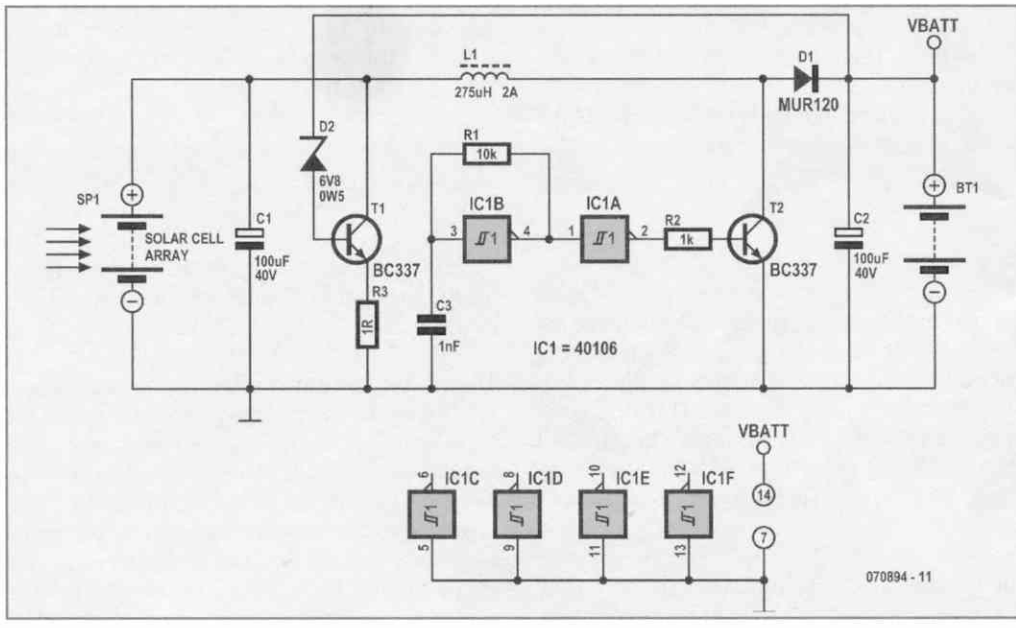

rent will now flow trough the inductor coil L1 via diode D1 to the load (capacitor C2 and possibly the battery), irrespective of the output voltage level. Capacitor C2 and/or the battery will then be charged. So, in the steady state the output voltage is higher than the input voltage and the coil voltage V_{L1} is negative, which leads to a linear drop in the current flowing through the coil. In this phase, energy is again transferred from the coils to the output. Transistor T2 is turned on again and the process is repeated.

A type BC337 (or 2N2222) is suggested for T2 as it achieves a high switching frequency. Inductor L1 should have a saturation current larger than the peak current; have a core material like ferrite (i.e. high-frequency) and low-resistance. Diode D1 should be able to sustain a forward current larger than the maximum anticipated current from the source. It should also exhibit a small forward drop and a reverse voltage spec that's higher than the output voltage. If you can find an equivalent Schottky diode in the junk box, do feel free to use it.

The most important function of the shunt regulator around T1 is to protect the batteries from taking damage due to overcharging. Besides, it allows the output voltage to be regulated. Low-value resistor R3 is switched in parallel with the solar cell array by T1 so that the current from the solar cell array flows through it. Zener diode D2 is of course essential in this circuit as its zener voltage limits the output voltage when T1 should be turned on, connecting the solar cell array to ground via R3. In this way, there is no input voltage to the boost converter and the battery cannot be overcharged.

Sealed lead-acid (SLA) batteries with a liquid electrolyte produce gas when overcharged, which can ultimately result in damage to the battery. So, it's important to choose the right value for zener diode D2. Special lead-acid batteries for solar use are available, with improved charge-discharge cycle reliability and lower self-discharge than commercially-available automotive batteries.
Finally, never measure directly on the output without a load connected – the ripple current can damage your voltmeter (unless it's a 1948 AVO mk2).

(070894-I)

Web Link
www.electronicia.se

006 Opamp VHF FM Transmitter

RF (RADIO)

Gert Baars

ICs that in the past were far too expensive for the hobbyist tend to be more favourably priced these days. An example of this is the AD8099 from Analog Devices. This opamp is available for only a few pounds. The AD8099 is a very fast opamp (1600 V/ms) and has high-impedance inputs with low input capacitance.

The bandwidth of the opamp is so large that at 100 MHz it still has a gain of nearly 40. This means that this opamp can be used to create an RC oscillator. The circuit presented here realises that.

The circuit has a few striking characteristics. Firstly, unlike normal oscillators that contain transistors this one does not have any inductors. Secondly, there is no need for a varicap diode to do the FM modulation.
The opamp is configured as a Schmitt trigger with only a small amount of hysteresis. The output is fed back via an RC circuit. In this way, the trimmer capacitor is continually be-

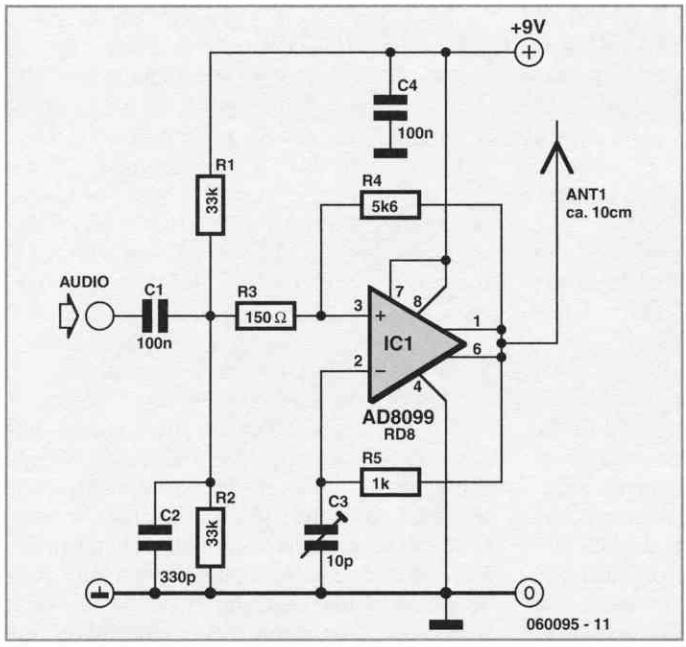

The package for the opamp is an 8-pin SOIC (provided you use the version with the RD8 suffix). The distance between the pins on this package is 1/20" (1.27 mm). This is still quite easy to solder with decent tools. If SMD parts are used for the other components as well then the circuit can be made very small. If necessary, a single transistor can be added to the circuit to act as microphone amplifier.

The power supply voltage may not be higher than 12 V, because the IC cannot withstand that. The current consumption at 9 V is only 15 mA.

ing charged and discharged when the voltage reaches the hysteresis threshold. The output continually toggles as a consequence. This results in a square wave output voltage. With a 10-pF trimmer capacitor the frequency can be adjusted into the VHF FM broadcast band 88-108 MHz). The frequency of the oscillator is stable enough for this. The output voltage is about 6 V_{pp} at a power supply voltage of 9 V. The transmitter power amounts to about 50 mW at a load of 50 Ω. This is about 20 times as much as the average oscillator with a transistor.

With a short antenna of about 10 cm, the range is more than sufficient to use the circuit in the home as a test transmitter. Because the output signal is not free from harmonics the use of an outdoor antenna is not recommended. This requires an additional filter/adapter at the output (you could use a pi-filter for this).

The FM modulation is achieved by modulating the hysteresis, which influences the oscillator frequency. An audio signal of about 20 mV_{pp} is sufficient for a reasonable output amplitude.

As with all free-running oscillator circuits, the output frequency of this specimen is also sensitive to variations of the power supply voltage. For optimum stability, a power supply voltage regulator is essential.

As an additional design tip for this circuit, we show an application as VCO for, for example, a PLL circuit. When the trimmer capacitor is replaced with a varicap diode, the frequency range can be greater than that of an LC oscillator. That's because with an LC oscillator the range is proportional to the square root of the capacitance ratio. With an RC oscillator the range is equal to the entire capacitance ratio. For example: with a capacitance ratio of 1:9, an LC oscillator can be tuned over a range of 1:3. With an RC oscillator this is 1:9.
For the second tip, we note that the circuit can provide sufficient power to drive a diode mixer (such as a SBL-1) directly. This type of mixer requires a local oscillator signal with a power from 5 to 10 mW and as already noted, this oscillator can deliver 50 mW. A simple attenuator with a couple of resistors is sufficient in this case to adapt the two to each other.

(060095-1)

007 DTMF-controlled Home Appliance Switcher

MICROCONTROLLERS

Hesam Moshiri

This circuit can be called using your mobile or a regular telephone set (with DTMF keys) and after passing some procedures, you can control DC-powered appliances installed in your home. Examples include the front door latch and the pump of a plant watering system.

Features
- Controls 6 high-power DC devices
- Five digits password security
- User-defined password
- Feedback to user by sounds
- Password and device status retained in EEPROM
- Device status on LED panel

You call the circuit and after three rings, it will answer your call and you will hear two little beeps. Next you enter your password. The default password for the circuit is: **12345**. Finish the password number with a hash (**#**) character. If your password is correct, you will hear two short beeps and you can control your devices or change a password. If you push the character * you will enter the password menu. Enter a new password using numbers (0-9) and with five digits length. Close off with a # at the end of the new password (e.g. 54321#). You will hear one long beep indicating that your new password is stored in memory and the circuit will disconnect the phone connection. If you do not push *, you can control your devices by entering pre-assigned numbers. For example, the number '**1**' is for home front or rear door and every time you push it the door will open. Numbers **2-6** are for controlling five other devices. With every key push you change a device status and you will hear appropriate sounds that relate to the device status. After every command, the new device status will be stored in EEPROM. Once all devices have been controlled, simply hang up.

If the circuit is called but the user doesn't enter any numbers, the circuit will hang up after 7 seconds. In all of these procedures, when you enter any number, the circuit will acknowledge reception with one short beep. Please wait briefly for

COMPONENTS LIST

Resistors
R1 = 68 kΩ
R2, R4 = 1 kΩ
R3 = 330 Ω
R5 = 10 kΩ
R6 = 100 kΩ
R7 = 220 kΩ
R8...R15 = 220 Ω

Capacitors
C1, C2, C3, C5, C9...C12, C15 = 100nF
C4 = 2μF2 40V radial
C13 = 1000 μF 40V radial
C14 = 100 μF 40V radial

Semiconductors
B1, B2 = B40C1500 (80Vpiv, 1.5A)
D1...D8 = LED, low current, 3mm
D9 = zener diode 4V7 400mW
D10...D15 = 1N4001
T1 = BD139
IC1 = Atmega8-16PC, programmed, Elektor Shop #080037-41
IC2 = MT8870
IC3 = 7805
IC4 = ULN2004

Miscellaneous
RE1...RE6 = 12V coil, e.g.V23057
X1 = 3.5795 MHz quartz crystal
K1 ,K2, K3 = 10-way boxheader
K4 = PCB terminal block, lead pitch 5mm
K5...K10 = PCB terminal block, lead pitch 7.5mm
K11 = RJ11 connector, PCB mount, Hirose TM5RE1-64 (Digikey # H11257-ND)
J1, J2 = 3-way SIL pinheader with jumper

PCB, ref. 080037-1 from *www.thepcbshop.com*

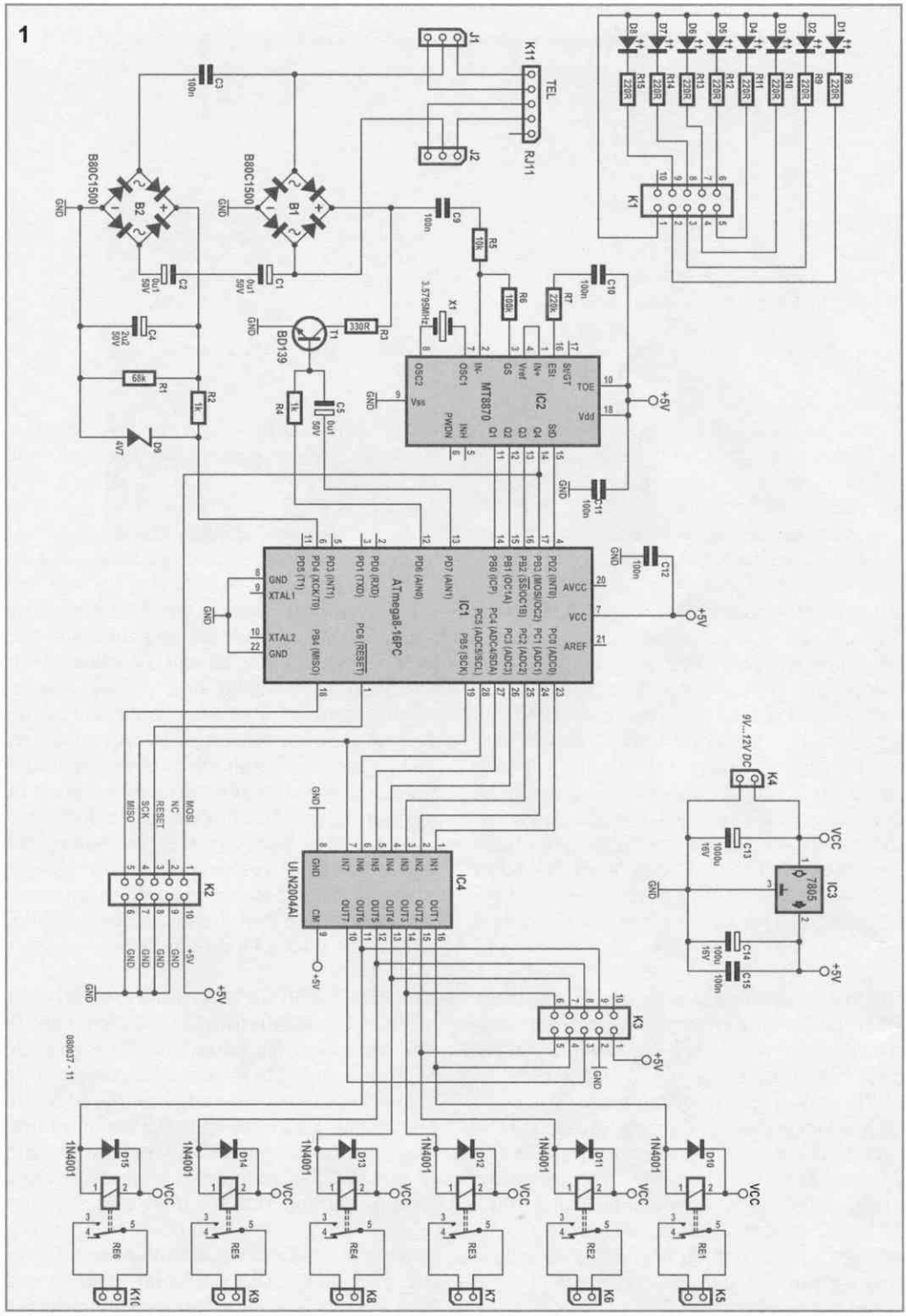
1
J1
J2
K11
TEL
RJ11
C3
100n
B80C1500
B2
B1
GND
C2
0u1
50V
C1
C4
2u2
50V
R1
68k
R2
1k
D9
4V7
C9
100n
R5
10k
R6
100k
R7
220k
C10
100n
X1
3.5795MHz
T1
BD139
R3
330R
R4
1k
C5
0u1
50V
IC2
MT8870
OSC2
OSC1
IN-
IN+
Vref
GS
Vss
PWDN
INH
Q1
Q2
Q3
Q4
StD
Vdd
TOE
ESt
StGT
+5V
C11
100n
C12
100n
IC1
ATmega8-16PC
PD5 (T1)
PD4 (XCK/T0)
PD3 (INT1)
PD1 (TXD)
PD0 (RXD)
PD6 (AIN0)
PD7 (AIN1)
PB0 (ICP)
PB1 (OC1A)
PB2 (SS/OC1B)
PB3 (MOSI/OC2)
PD2 (INT0)
PC0 (ADC0)
PC1 (ADC1)
PC2 (ADC2)
PC3 (ADC3)
PC4 (ADC4/SDA)
PC5 (ADC5/SCL)
PB5 (SCK)
PC6 (RESET)
PB4 (MISO)
XTAL1
XTAL2
AVCC
VCC
AREF
K1
D1
D2
D3
D4
D5
D6
D7
D8
R8
R9
R10
R11
R12
R13
R14
R15
220R
K2
MISO
SCK
RESET
NC
MOSI
IC4
ULN2004AI
IN1
IN2
IN3
IN4
IN5
IN6
IN7
OUT1
OUT2
OUT3
OUT4
OUT5
OUT6
OUT7
CM
K3
K4
9V...12V DC
C13
1000u
16V
C14
100u
16V
C15
100n
IC3
7805
VCC
1N4001
D10
D11
D12
D13
D14
D15
RE1
RE2
RE3
RE4
RE5
RE6
K5
K6
K7
K8
K9
K10
080037 - 11

2

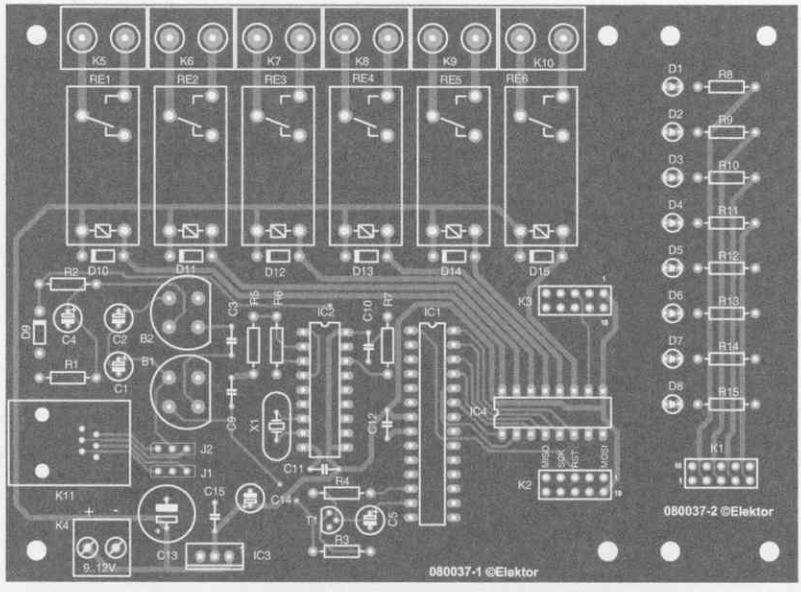

75%

the circuit to receive and process the number pressed.
A maximum of three wrong password entries is accepted. With every wrong password you enter, you will hear one long beep and if you enter a wrong password thrice, you will hear one long beep again and the circuit will hang up on you. The circuit shows the status of all devices by its LED panel. D1 indicates the circuit power, D2 the answer status (ON: phone line is busy; OFF: phone line is free). The other LEDs indicate the status of the controlled devices (LED ON: device = ON, LED OFF: device = OFF).

The schematic diagram **Figure 1** has these main parts: power supply, ring detector, answering circuit, tone decoder, microcontroller, output relays and LED panel driver. The power supply includes IC3, C6, C7 and C8 producing the +5 V supply voltage for the circuit. The ring detector comprises B2, C1-C4, R1, R2 and D9. C1, C2 and C3 pick up the ring (AC) voltage of between 80 V and 100V, 25 Hz. B2 converts the ring voltage to DC. C4 serves for noise reduction and R1, R2 and D9 create a suitable voltage level at the PD4 pin of the microcontroller.

When you call the circuit, one +5 V ring pulse appears at the cathode D9. The answer circuit includes B1, C5, R4, R3 and T1. If you want the circuit to answer to one ring, put one resistor in parallel with the telephone line, reducing the line voltage to approximately 15 V_{DC} and passing about 20 mA through the resistor. Answering the call implies driving T1 into saturation. Therefore the telephone line current will pass through R3. To hang up, T1 is switched off. The function of C5 is to inject a sound produced by the microcontroller. The DTMF tone decoder circuit includes R5, R6, R7, C9, C10, C11, X1 and IC2.

IC2 (an MT8870) is a DTMF tone decoder IC. It receives the DTMF tones via R5, R6 and C9. The corresponding binary data of each code appears on the Q1-Q4 pins. An incoming code is indicated by a rising edge on the STD pin. The event is fed to the INT0 pin of the microcontroller. A High level on the TOE pin of the MV8870 enables the outputs Q1-Q4. Here it is strapped to the +5 V rail.

The micro is an ATMega8 from Atmel. The final stage has a ULN2003 high voltage and high current Darlington transistor array IC,

that easily copes with the relay and LED panel currents. Each output pin of this IC can drive up to 500 mA. The LED panel includes D1-D8 that indicate circuit activity and status of all devices. Caps C11 and C12 are included for noise reduction and it is to use multilayer capacitors ceramic for this purpose.

The PCB for the controller is shown in **Figure 2**. One PCB section comprises the main circuit the other is for the LED panel. The two PCBs are interconnected with a 10-way (2×5) IDC connector. Once the circuit has been built up, the micro has to be programmed with the firmware hex file from free download archive **080037-11.zip** found on the Elektor website. The source code is also available: it was produced using MikroC from MikroElektronika.

Table 1: ATmega8 programming settings	
CKSEL0	0
CKSEL1	0
CKSEL2	1
CKSEL3	0
CKOPT	1
1: Unprogrammed, 0: Programmed	

Connect the 9-12 V_{DC} mains adapter to J1. Next, program the microcontroller by means of the ISP socket, K2. Select an 8-MHz internal clock source for the micro by setting the fuse bits per **Table 1**. Don't forget to program both the Flash (filename.hex) and the EEPROM (filename.eep) file! Connect your electrical appliances to the circuit observing all relevant electrical safety precautions. The EEPROM in the circuit ensures that settings are not lost after a reset or when a mains power interruption occurs.

Finally, we can calculate the security of the system. With a five-digit password, we have a 1 in 100,000 probability of hitting the correct code by chance, which seems adequate for such a simple system.

Caution. This circuit is not approved for connection to the public switched telephone network (PSTN).

Caution. Observe electrical safety precautions when connecting mainsoperated loads to the circuit.

(080037-I)

008 Computer Off Switch

COMPUTERS AND INTERNET

Uwe Kardel

How often does it happen that you close down Windows and then forget to turn off the computer? This circuit does that automatically. After Windows is shut down there is a 'click' a second later and the PC is disconnected from the mains.

Up to now there were no mains switches available with a magnetic coil to turn off the power supply voltage, but now one is available from Conrad Electronics , with the article number 70061 for a price of 12.95 Euro (approx. £ 9.00). Surprisingly enough, this switch fits in some older computer cases. If the circuit doesn't fit then it will have to be housed in a separate enclosure. That is why a supply voltage of 5 V was selected. This voltage can be obtained from a USB port when the circuit has to be on the outside of the PC case.

A PCB design is available for the electronics part, but not for the high voltage part. It is best to solder the mains wires straight onto the switch and to insulate them with heat shrink sleeving.

C8 is charged via D1. This is how the power supply voltage for IC1 is obtained. A square wave oscillator is built around IC1a, R1 and

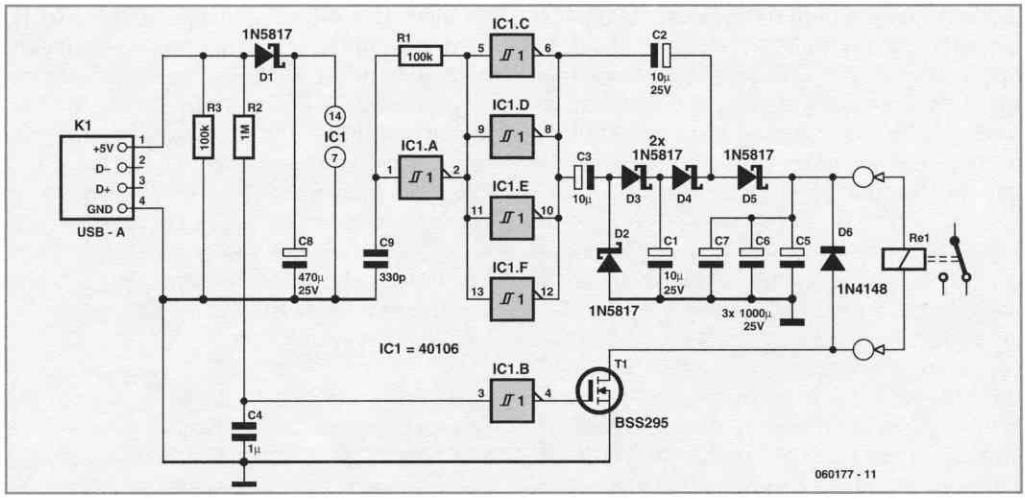

C9, which drives inverters IC1c to f. The frequency is about 50 kHz. The four inverters in parallel power the voltage multiplier, which has a multiplication of 3, and is built from C1 to C3 and D2 to D5. This is used to charge C5 to C7 to a voltage of about 9 V. The generated voltage is clearly lower than the theoretical $3 \times 4.8 = 14.4$ V, because some voltage is lost across the PN-junctions of the diodes. C5 to C7 form the buffer that powers the coil of the switch when switching off.

The capacitors charge up in about two seconds after switching on. The circuit is now ready for use. When Windows is closed down, the 5-V power supply voltage disappears. C4 is discharged via R2 and this results in a '0' at the input of inverter IC1b. The output then becomes a '1', which causes T1 to turn on. A voltage is now applied to the coil in the mains switch and the power supply of the PC is turned off. T1 is a type BSS295 because the resistance of the coil is only 24 Ω.

When the PC is switched on, the circuit draws a peak current of about 200 mA, after which the current consumption drops to about 300 µA. The current when switching on could be higher because this is strongly dependent on the characteristics of the 5-V power supply and the supply rails in the PC.

There isn't much to say about the construction of the circuit itself. The only things to take care with are the mains wires to the switch. The mains voltage may not appear at the connections to the coil. That is why there has to be a distance of at least 6 mm between the conductors that are connected to the mains and the conductors that are connected to the low-voltage part of the circuit. Also refer to the Electrical Safety page elsewhere in this book.

(060177-1)

009 Quad Power Supply for Hybrid Amp

POWER SUPPLIES, BATTERIES AND CHARGERS

Ton Giesberts

This power supply was designed for use with the 'Simple hybrid amp' published on page 204 in this book. It is of course suitable for use in other applications as well. We've used a cascade generator for the 170 V, a switch mode supply for the 16 V, a series regulator

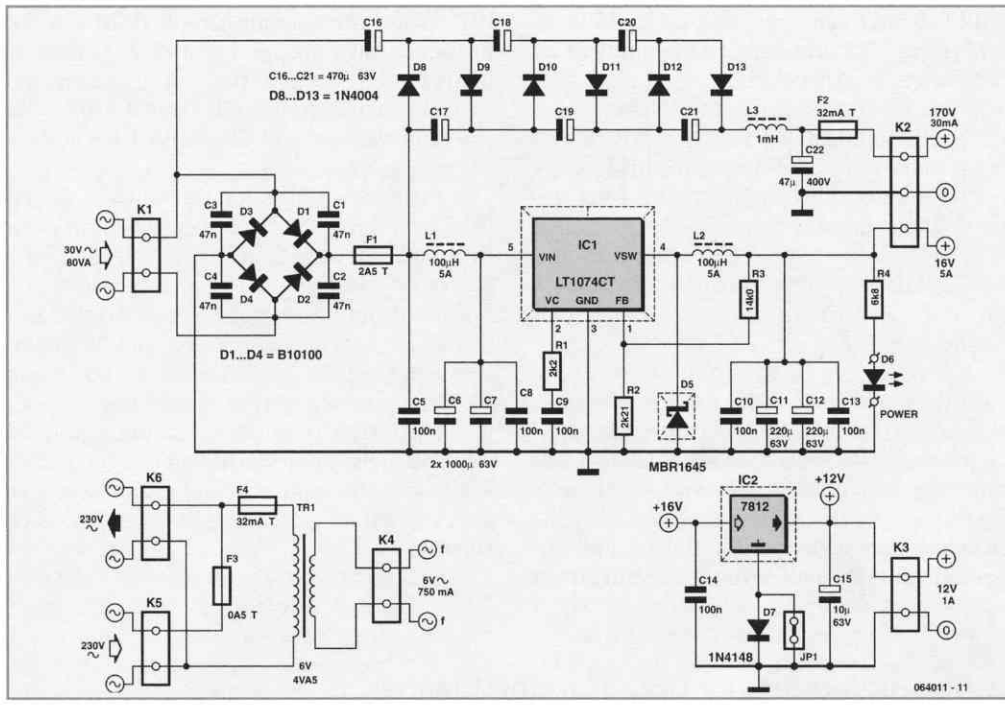

for the 12 V and a separate transformer for the 6.3 V filament supply.

We've chosen an LT1074CT (IC1) for the regulator, which means that the circuit can be built with relatively standard components and will have a high efficiency. The power loss is less with this device compared to a linear voltage regulator. This allows us to use a higher transformer voltage and a smaller cascade section to generate the 170 V (which is required for the SRPP stage in the amplifier).

The lower input current also results in smaller losses in the bridge rectifier (D1 to D4). A standard 12 V regulator (IC2) turns the 16 V into a stabilised voltage for the buffer stage. When an ECC83 (12AX7) is used in the hybrid amp we could use this 12 V to power the filaments in the valve as well, although we really need 12.6 V. The current taken by the valve is about 150 mA, which means that the 12 V regulator needs to be fitted with a heatsink. This can be a small version of an SK129 heatsink from Fischer (38.1 mm, 6.5 K/W). To increase the voltage by 0.6 V we've added diode D7 to the ground connection of the regulator. If an output voltage of 12 V is required you should close JP1, which shorts D7.

IC1 and D5 require a little more cooling and for this the 63.5 mm version of the SK129 will suffice (4.5 K/W). Both components can be mounted on opposite sides of the heatsink. You have to make sure that they are electrically isolated from each other and the heatsink! You should take a look at the website of Linear Technology and take note of the layout recommendations regarding the use of an LT1074 (*www.linear.com*).

You can use standard chokes for L1 and L2, rated at 5 A. If you want to remove more of the residual 100 kHz switching frequency you could always add an extra LC filter at the output. The diodes in the bridge rectifier are B10100's. These are Schottky rectifiers, which have a low forward voltage drop (only 0.7 to 0.8 V at 10 A). We have chosen diodes with a reverse voltage rating of 100 V so we have the option of using an LT1074HVCT instead. This can work with an input voltage of up to 60 V, which means we could use a 40 V_{AC} transformer. The same cascade circuit can then easily generate 220 V_{DC}. The stan-

dard LT1074CT can cope with up to 45 V, so we're using IC1 fairly close to the limits of its specifications in this circuit.
A cascade circuit generates the HT supply for the valve. It would also have been possible to use a separate transformer with a bridge rectifier and smoothing capacitor to generate this voltage. But then we'd have to find a 4.5 VA transformer with a 40 V secondary and connect it the 'wrong' way round. As this isn't exactly a standard transformer we dropped that idea.
The source for the cascade generator is now an 80 VA transformer. The capacitors in the cascade circuit have higher values than are strictly necessary. This makes it easier to calculate the expected output voltage. In our case this is $4 \times 30 \times \sqrt{2}$ V for the no-load voltage, which comes to nearly 170 V. L3 and C22 filter out any HF interference coming from IC1. When the cascade supplied 20 mA the output voltage dropped to 140 V. At heavier loads we recommend that you use a smaller cascade circuit and a higher transformer voltage (and also use an LT1074HVCT because of the higher input voltage).
The filament voltage for the valve is generated by a 4.5 VA transformer, which in practice had an output a bit above 6 V and therefore came closer to the required 6.3 V. Another solution is to use a special transformer or a stabilised 6.3 V_{DC} supply. Any of these will work, so it's down to your own preference which of these you'll use.
It is in principle possible to use the supply for two channels. However, if you use the ECC88 in the amplifier you may find it's necessary to use a separate cascade generator for each channel.

(064011)

010 High-intensity LED Warning Flasher

MISCELLANEOUS ELECTRONICS AND DESIGN IDEAS

Jose Luis Basterra

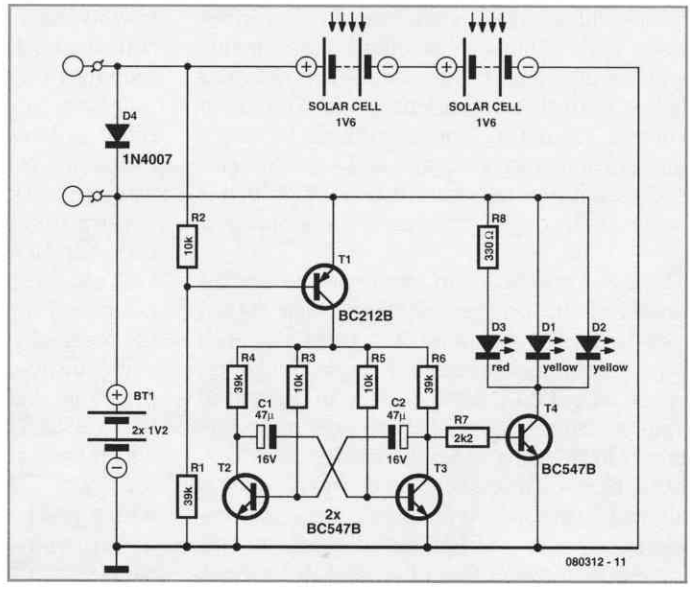

This circuit was designed as a warning flasher to alert road users to dangerous situations in the dark. Alternatively, it can act as a bicycle light (subject to traffic regulations and legislation).
White LEDs only are recommended if the circuit is used as a bicycle front light (i.e. for road illumination) and red LEDs only when used as a tail light.
During the day, the two 1.6-V solar cells charge the two AA batteries. In darkness, the solar cell voltage disappears and the batteries automatically power the circuit. The flash frequency is about one per second and the LED on-time is about 330 ms. The duty cycle should enable the batteries to power the circuit over night.

The circuit is composed of three parts. Under normal daylight conditions the batteries are charged through diode D4. In darkness, pnp transistor T1 is switched on, supplying battery current to the second part, a low-frequency oscillator comprising T2 and T3.
The third part is the LED driver around T4. It conducts and switches on the LEDs D1-D2-D3 when the collector voltage of T3 swings high. Two LEDs (D1, D2) are 20,000-30,000 mcd high-brightness yellow types and one (D3) is a normal 3-mm red LED for control purposes. Of course it is possible to increase the number of LEDs to obtain higher brightness. However you will run into limitations regarding the maximum collector current of transistor T4. For really high power applications a MOSFET transistor is suggested instead of the common or garden BC547B.

(080312-I)

011 Electronic Torricelli Barometer

TEST AND MEASUREMENT

Christian Tavernier

Although it does not have the same charm as real mercury barometers with long glass tubes on pieces of carved and polished wood, the Torricelli barometer discussed here is a functional equivalent and electronic replica of the Torricelli barometer. Actually, rather than displaying the atmospheric pressure on the traditional digital displays, we preferred to reproduce the general look of this respected predecessor of electronic barometers. The mercury tube is, of course, replaced by a simple LED scale which, if not as beautiful, is still less toxic for the environment in case of breakage.
As indicated on the drawing, the pressure sensor utilized is a Motorola MPX2200AP. This circuit is adapted for measuring absolute pressure and has a range well suited for atmospheric pressure. Without entering too deep into the technical details, such sensors deliver an output of voltage proportional not only to the measured pressure but, unfortunately, to their supply voltage as well. Hence they must be powered from a stable voltage

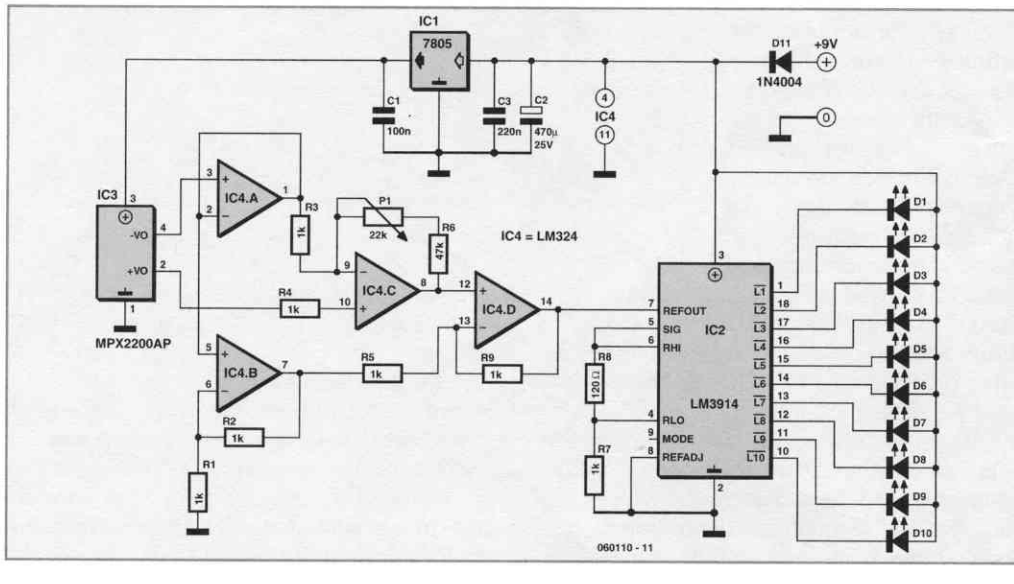

which is ensured here by the use of IC1. Since the output of the MPX2200 is differential and at a very low level, we had to resort to the use of four operational amplifiers IC4.A to IC4.D, contained in one LM324, to obtain levels that can be processed easily. As long as potentiometer P1 is adjusted correctly, this group of operational amplifiers delivers a voltage of 1 volt per atmospheric pressure of 1,000 hPa to the LM3914. Since the atmospheric pressure will be within the range 950 to 1040 hPa at sea level, we need to make an expanded-scale voltmeter with this LM3914 in order to better exploit the 10 LEDs that it can control. That is the role of resistors R7 and R8 which artificially raise the minimum voltage value the chip is capable of measuring.

Consequently, we can 'calibrate' our LED scale with one LED per 10 hPa and thus benefit from a measurement range which extends from 950 hPa to 1040 hPa. In principle, you should not have a need to go beyond that in either direction.

The circuit may be conveniently powered from a 9-volt battery but only if used very occasionally. Since this is usually not the case for a barometer, we advise you to use a mains adaptor instead supplying approximately 9 volts.

Calibration basically entails adjusting the potentiometer P1 to light the LED corresponding to the atmospheric pressure of your location at the time. Compare with an existing barometer or, even better, telephone the closest weather station. They will be happy to give you the information.

(060110-1)

After Evangelista Torricelli, 1608-1647, Italian physician who proved the existence of atmospheric pressure and invented the mercury barometer.

012 Battery Discharge Meter

POWER SUPPLIES, BATTERIES AND CHARGERS

Christian Wendt

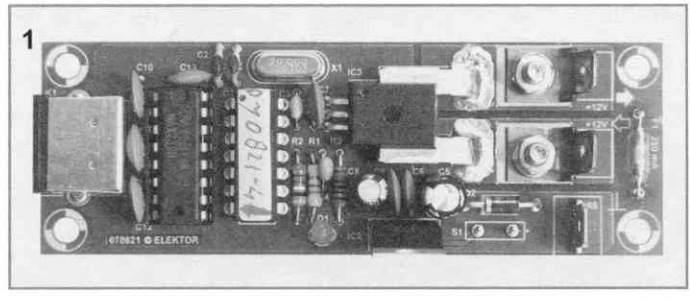

Men like their hobbies. The author is a particular fan of fishing, and like many anglers is the proud owner of not only a fishing rod, but also a boat: and this is where the electronics comes in. The author's boat has an electric outboard motor, and with his mind wrapped up in his sport it can easily happen that the battery is allowed to run down, leaving the not very enticing prospect of a long paddle home.

Simple approaches, such as computing the optimal point to stop and turn round, are not really satisfactory, as angling involves the boat making a relatively large number of short hops. The author therefore decided to go back to first principles and find an electronic solution.

Energy measurement

In order to estimate and show the energy stored in the battery we need an LCD panel, a microcontroller and suitable sensors. In theory we need to measure time (easy enough) and voltage (also easy) as well as current. Energy dissipated in measurement should be

minimised (trickier). The product of the three measured values gives electrical energy.

Time measurement is straightforward on a microcontroller. Modern devices have an integrated analogue-to-digital converter which is accurate enough for measuring the battery voltage. It is harder to measure current as the current drawn by the outboard motor is large and it is difficult to avoid dissipating a few percent of the power delivered by the battery in heating up the shunt resistor.

Fortunately there are current sensors available for just this kind of application. The ACS750 [1] is essentially a thick piece of wire with accompanying Hall-effect sensor and conditioning circuitry. The series resistance is 130 $\mu\Omega$ and so the voltage dropped across the sensor is very small. The IC requires a 5 V supply and in the quiescent state (no current flow) has an output voltage of 2.5 V. When a current flows this voltage will rise or fall, depending on the direction of flow. The version used here, the ACS750SCA-050, is linear from –50 A to +50 A with a transfer characteristic of 1 V per 25 A, ideal for feeding into the analogue-to-digital converter in the microcontroller.

In this application voltage measurement is not so critical. The voltage should be monitored in case a fault (such as a bad connection) causes it to drop rapidly. Typically, however, the voltage remains fairly constant and it is adequate to display the charge used in amp-hours (Ah), the unit normally used to express battery capacity.

The capacity of the battery is best determined experimentally: charge the battery, do a few laps of a lake until the battery is completely flat, and let the circuit tell you the capacity in Ah. Make a note of this value. It would be possible to extend the meter to allow the battery capacity to be entered, in order to provide a 'petrol gauge' display calibrated in percent.

The circuit's 'user interface' consists of a single button which is used (among other things) to reset the Ah counter. If the button is held

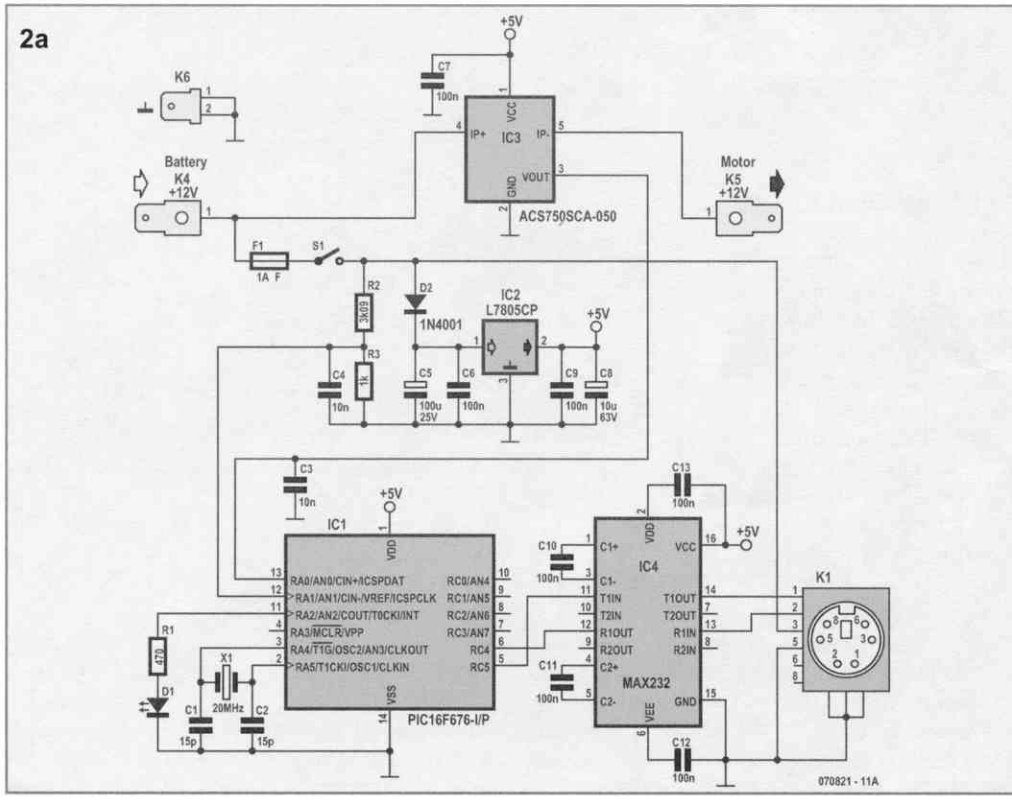

down when the meter is turned on the counter will be reset to zero; if the button is not held down when the meter is turned on, it will start from the most recent stored value.

Circuit(s)

In the interest of reliable operation the circuit of the battery meter is divided into two parts. The normal arrangement is that the battery and motor are at the stern of the boat, while the captain is looking forward. A couple of meters of cable are therefore required between the two parts. Data transfer between the two parts of the circuit must be resilient to noise (even that generated by electric eels!).

The author decided to use a microcontroller both in the measurement part of the circuit and in the display part, with an RS-232 serial link between the two. Conversion to standard voltage levels is done using a MAX232 at each end, as shown in the combined circuit diagram (**Figure 1**).

On the sensor side of the system a PIC16F676 is used. It has analogue inputs with a resolution of 10 bits, which, taking into account the effect of the voltage divider formed by R2 and R3, gives a resolution of 20 mV for the battery voltage measurement. LED D1 is an undervoltage alarm, lighting when the battery voltage falls below 10.6 V. RA0 of IC1 is connected directly to the output of current sensor IC2, giving a current resolution of approximately 125 mA. The measurement results then flow out of the serial port and via the MAX232 over the RS-232 link to the display.

A PIC16F628 drives the display, polls pushbutton S2 and jumper J1, and receives serial data from the measurement unit. Contrast is adjusted using P1, and T1 switches the backlight on and off. With the suggested values for R6 and R8 the backlight current in the prototype was 38 mA. If more brightness is required, lower resistor values can be used as long as the maximum rating for the display (150 mA) is not exceeded.

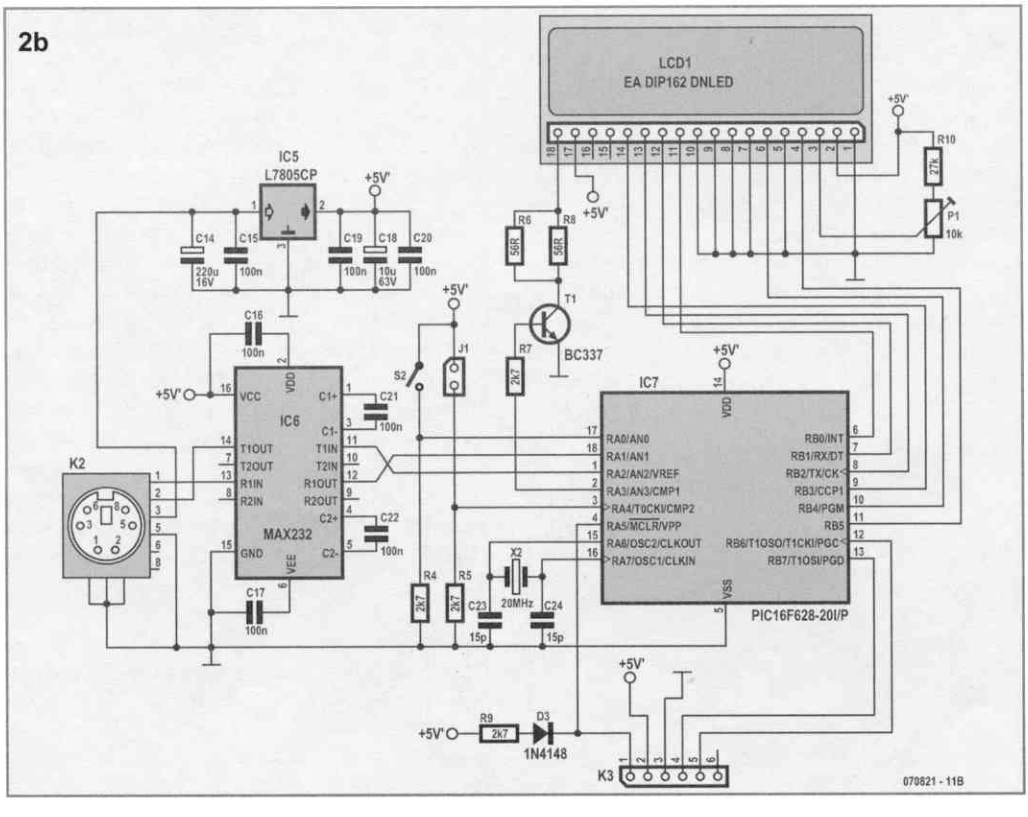

3

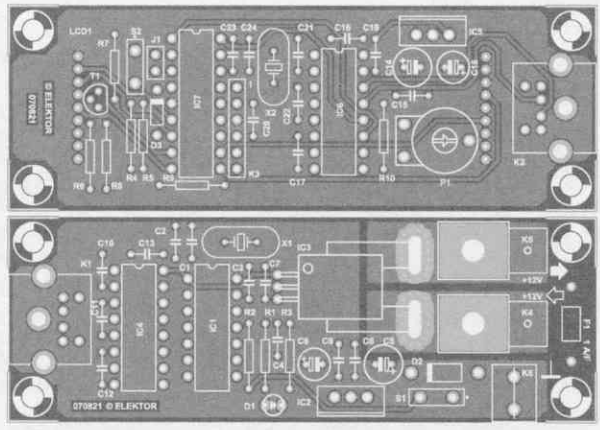

85%

Each part of the circuit has its own regulated 5 V supply to improve overall reliability. The current consumption of the sensor part is approximately 20 mA, and the display part draws approximately 17 mA with the backlight off.

Circuit board

A printed circuit board has been designed for each half of the circuit, making two small modules that can be connected together using a cable. The only unusual component on the sensor module (**Figure 3**) is the current sensor. The copper tracks that run to it are wide and the tags are fixed to the board with assistance from plenty of solder tinning. Other slightly unusual sights are the miniature fuse with solder connections to the right and the six-pin PCB-mount mini-DIN socket to the left. This socket allows ready-made six-way cables to be used, and the miniature plugs also are conveniently able to pass through small holes. Cables with four-way plugs will of course not fit in six-way sockets.

4

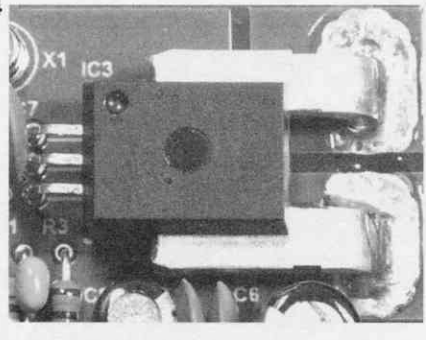

If you wish to use a different sort of connector, then you should of course dispense with the mini-DIN sockets. The important thing is to ensure that the 12 V supply is provided on the cable along with ground and the RxD and TxD signals.

The LCD panel is fitted directly to the solder side of the display module circuit board (see Figure 4). It is therefore best to leave soldering the display until last.

Pin 1 of the display is marked 'LCD1' on the component side of the circuit board. As long as care is taken to observe this, nothing should go wrong with mounting the display.

It is well worth fitting the two microcontrollers in sockets in case you should want to alter the program at a later date. The display board is equipped with a six-way connector K3 to allow in-circuit programming of the microcontroller.

The software for each processor is as always available as source code (for Microchip's MPLAB) and as object code for free download from the Elektor website [2].

Operation

When the unit is switched on using S1 the display will briefly show:

Accu Control
WEN May 07

COMPONENTS LIST Sensor module

Resistors
R1 = 470 Ω
R2 = 3kΩ09
R3 = 1 kΩ

Capacitors
C1, C2 = 15 pF ceramic, lead pitch 5mm
C3, C4 = 10 nF ceramic, lead pitch 5mm
C5 = 100 µF 25V radial, diameter 6.3mm
C6, C7, C10...C13 = 100 nF ceramic, lead pitch 5mm
C8 = 10 µF 25V, radial, lead pitch 2.5mm
C9 = 100 nF ceramic, lead pitch 5mm

Semiconductors
D1 = LED, red
D2 = 1N4001
IC1 = PIC16F676-20I/P, programmed, Elektor Shop # 070821-41
IC2 = 7805
IC3 = ACS750SCA-050
IC4 = MAX232 (DIP16)

Miscellaneous
K1 = 6-way mini-DIN socket, PCB mount
K4,K5,K6 = spade terminal
2 M3 screws and nuts
F1 = miniature fuse, 1A, fast, for solder mounting
S1 = on/off switch
Mini DIN cable with moulded 6-way plugs
X1 = 20MHz quartz crystal, parallel resonance
PCB, ref. 070821-1, from *www.thepcbshop.com*

COMPONENTS LIST Display module

Resistors
R4, R5, R7, R9 = 2kΩ7
R6, R8 = 56 Ω
R10 = 27 kΩ
P1 = 10 kΩ preset

Capacitors
C14 = 220 F 16V radial, lead pitch 2.5mm, ∅ 6.3mm
C15...C17,C19...C22 = 100 nF ceramic, lead pitch 5mm
C18 = 10µF 25V radial, lead pitch 2.5mm
C23, C24 = 15 pF ceramic, lead pitch 5mm

Semiconductors
D3 = 1N4148
T1 = BC337
IC5 = 7805
IC6 = MAX232 (DIP16)
IC7 = PIC16F628-20/P, programmed, Elektor Shop # 070821-42

Miscellaneous
J1 = 2-way header and jumper
S2 = pushbutton
K2 = 6-way mini-DIN socket, PCB mount
K3 = 6-way pinheader, lead pitch 2.54mm
LCD1 = LCD, 2x16 characters, e.g. EA DIP162 DNLED
X2 = 20MHz quartz crystal, parallel resonance
PCB, ref. 070821-2, from *www.thepcbshop.com*

and then subsequently:

for reset press switch... 7

whereupon a seven-second countdown will start.
The current state of the battery will then be displayed: its terminal voltage, instantaneous current, and the remaining battery charge.
If jumper J1 is fitted the zero point of the current sensor can be calibrated by up to ±10 units in the least significant digit.
Every ten seconds the remaining charge value is stored in the EEPROM of the display microcontroller. The display backlight is only enabled while the motor is running or by a brief press of the button. In his prototype the author used a waterproof 'vandal resistant' pushbutton.

Something fishy

No angler is properly equipped to go about his hobby without special glasses that include a polarisation filter to reduce the effect of light reflections from the water. As a result it is possible that the display can appear to be unstable and flickery: sometimes legible, sometimes not. When he first saw this effect the author suspected a fault in the electronics or software and it was some time before he realised that the operation of LCDs depends on polarised light, and that the problem was right under (or rather over) his nose.

(070821-I)

Web Links
[1] *www.allegromicro.com/en/Products/Part_Numbers/0750/*
[2] *www.elektor.com*

013 Presence Simulator

Christian Tavernier

Among the many anti-theft devices that are available, presence simulators have a special role to play. In fact, while an alarm system generally reacts the instant the intrusion is detected, or sometimes a little afterwards, in all cases the damage has already occurred. The purpose of the presence simulator is to stop intrusions beforehand by making crooks think that someone is at home. Working from the principle that the majority of home burglaries, with break-in, happen particularly at night, a properly designed presence simulator turns on the lights as evening falls, then turns them off a few hours later, causing an observer with bad intentions to believe that the premises are occupied.

Creating such a function with a microcontroller is certainly very easy and has already been done many times in the past, but the project we are proposing now is intended for those among you who do not want to, or who cannot program this type of circuit. As a result, our diagram only includes very common logic circuits from the CMOS 4000 family, with quite respectable results.

Ambient light is measured using the LDR R3 and, when it goes below a threshold determined by the adjustable potentiometer (P1) setting, like when night falls, it drives the IC1.A gate output to a low level. This has the effect of triggering triac T3 through gates IC1.C, IC1.D and transistors T1 and T2. At the same time, this clears the reset input from IC2 which is none other than the classic 4060 in CMOS technology.
Considering the values of C2, R4 and P2, the internal continuous oscillator in IC2 functions at a frequency on the order of 5 Hz. Consequently, its output Q12 (pin 2) changes state at the end of approximately one to two hours (depending on the P2 setting) while Q13 (pin 3) does the same, but in two to four hours.

Depending on whether a link has been installed on S1 or on S2, gate IC1.B output thus changes state after one to four hours, having

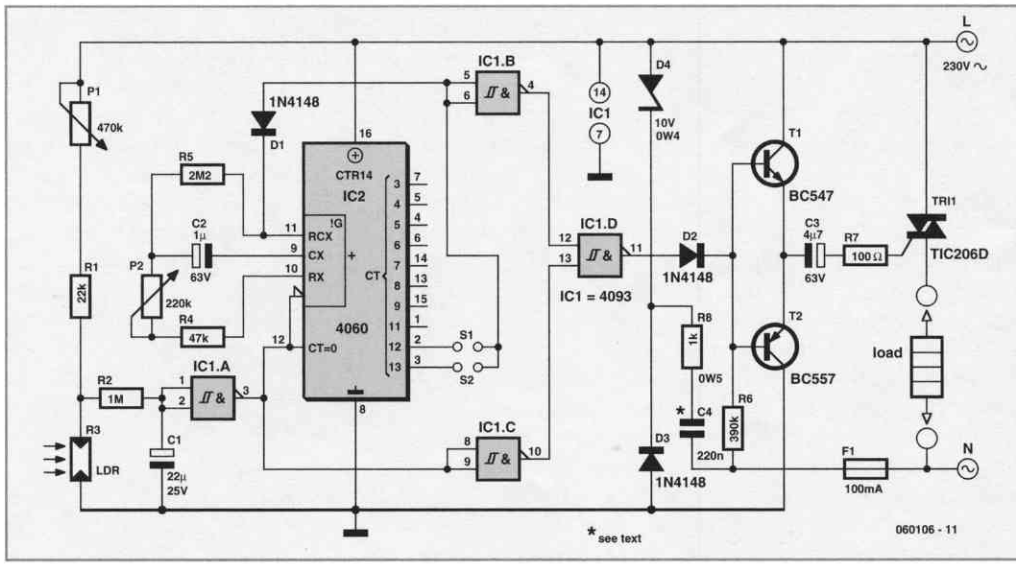

the effect of blocking triac TRI1 through IC1.D, T1 and T2. Simultaneously, diode D1 blocks the oscillator contained in IC2 and, therefore, the assembly stops in this state. It is dark, the light was lit for one to four hours, according to the setting of P2 and the wiring of S1 or S2, and it just went out. A return to the initial state can only happen after IC2 is reset to zero, which occurs when its input from reset to zero (pin 12) goes to high level, in other words at dawn and LDR R3 detects lights again.

Thanks to its low consumption, this circuit can be directly powered by the mains using capacitor C4. The latter must be a class X or X2 model, rates for 230 V_{AC}. Such a model, called a self-healing capacitor, is actually the only type of capacitor we should use for power supplies that are directly connected to the mains supply.

To ensure proper operation, we should pay careful attention to the placement of the LDR, to prevent the device being influenced not only by light from the house to be protected, but also by potential street lights, or even headlights of passing cars. Finally, since it is directly connected to the mains, the assembly must be mounted in an insulating housing, for obvious safety reasons.

www.tavernier-c.com (060106-1)

014 Reaction Race using ATtiny13

HOBBY AND MODELLING

Stefan Hoffmann

This is a reaction timer game between two players, red and green. Each player has a pushbutton in front of him that he must press at just the right moment: not too early and not too late. The aim is to be the first to press the button. The 'right time' is indicated by a multi-colour LED.

Each round of the game runs as follows: after a welcome pattern (flashing red and green, playing two tones), the LED starts to blink red slowly. A player who presses during this phase (too early) is 'punished' by a low-pitched tone and the lighting of the LED in his colour.

After a random time period the LED turns yellow. The first to press during this period is the winner and is rewarded by a rapid flashing of the LED. If the LED goes out again before either player has pressed his button, it is too late and another round of the game starts.

As a glance at the well-commented source code for the microcontroller software shows, the sequence of events and their timing can easily be adjusted as required. Source and object code files are as usual available for free download from the Elektor website (*www.elektor.com*). Ready-programmed microcontrollers are also available.

(080118)

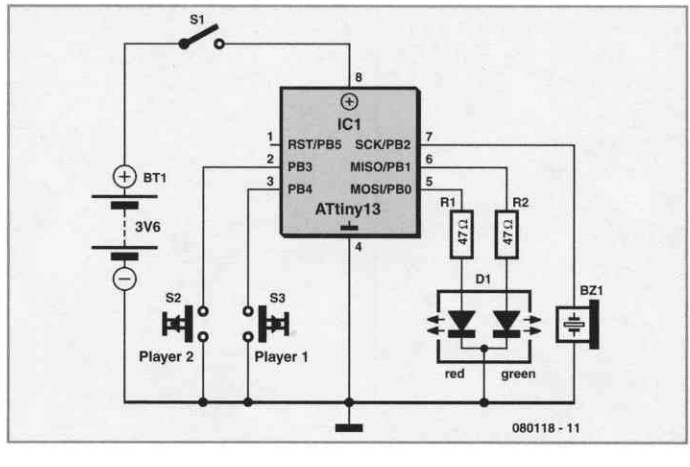

015 Multimedia RIAA Preamplifier

Christian Tavernier

Even if a large number of album titles once available on vinyl are now, little by little, being proposed as CDs, not all are available and far from it. You may have treasures in your collection that you would like to burn on CDs. From a point of view of software and PCs, converting from vinyl to CD is not a problem. A large number of programs, whether paid for freeware, are available to re-master vinyl records with varying degrees of success and to eliminate pops, crackles and other undesirable noises. All of these programs work with the sound card of your PC and that, admittedly, is where the problem starts.

Most high-quality turntables are equipped with a magnetic cartridge which typically delivers just a few mV. The cartridge signal requires a correction of a specific frequency, called RIAA correction.

For mechanical reasons related to the vinyl engraving procedure, high-boost frequency correction is carried out while respecting a very precise curve defined a long time ago by the RIAA (*Recording Industry Association of America*).

Reversing the correction is the role of to the preamplifier for the magnetic cartridge. Since this correction boosts the lowest frequencies, such a preamplifier is very sensitive to all undesirable noises, hums, including, of course, the one coming from the 50-Hz (or 60-Hz) mains power supply. It is important to take that into account while making this project which must be done carefully with respect to grounding and shielding.

The schematic of our preamplifier is very simple because it uses a very low-noise dual operational amplifier. Here the NE5532 is used, whose response curve is modelled by R7, R8, C8, and C9 (or R14, R15, C13, and C14 respectively) in order to match the RIAA correction as closely as possible.

The input has an impedance of 47 kΩ, which is the standardized value of magnetic car-

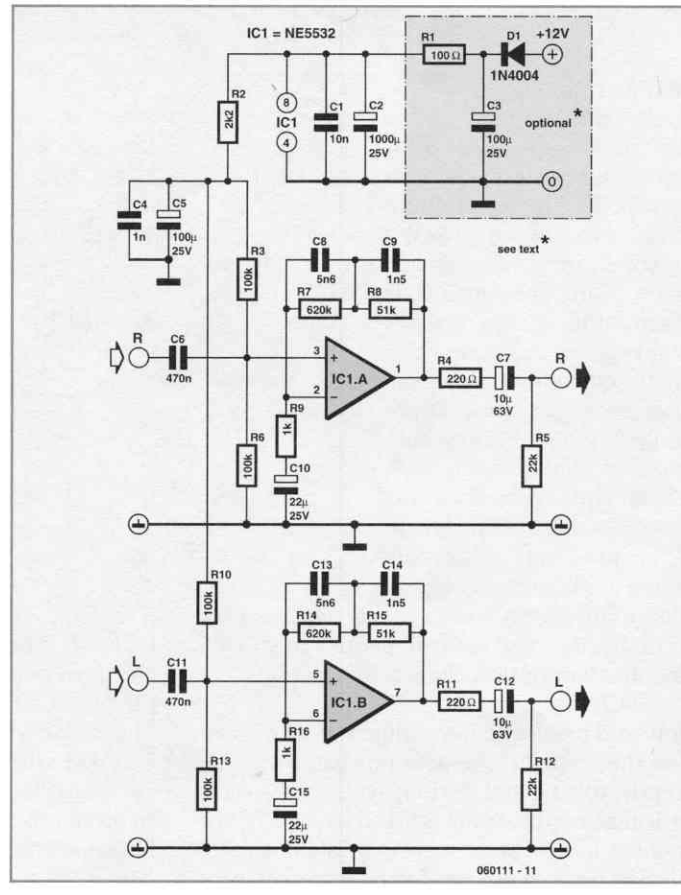

tridges, and its 1,000-Hz gain is 35 dB which allows it to supply an output level of a few hundred mV typically required by for the line input of a PC sound cards.
The connection between the cartridge and the input of the amplifier requires shielded wiring to avoid the hum problems discussed above. Likewise we recommend fitting the assembly in a metal housing connected to the electric ground. With respect to the power supply, three solutions are proposed: If you are a purist and you want to rule out any noise whatsoever, you will utilize a simple 9-V battery. Then, the components outlined with a dotted line will not be useful. Since the circuit only uses a few mA, such a solution is acceptable unless your collection of vinyls is impressive...
If you desire a more elegant technical solution, you may want to wire up the components within in the dotted lines and you can steal the 12 V positive voltage available from your PC. A Y-connector inserted on the power supply of one of the internal drives or peripherals will work very well for that.
Finally, you may also use a mains adapter set to 12 V and connect it to the +12-volt point of the drawing in order to benefit from additional filtering, which is not a luxury for some.

(060111-1)

016 Post-box Monitor

HOME AND GARDEN

Mathieu Coustans

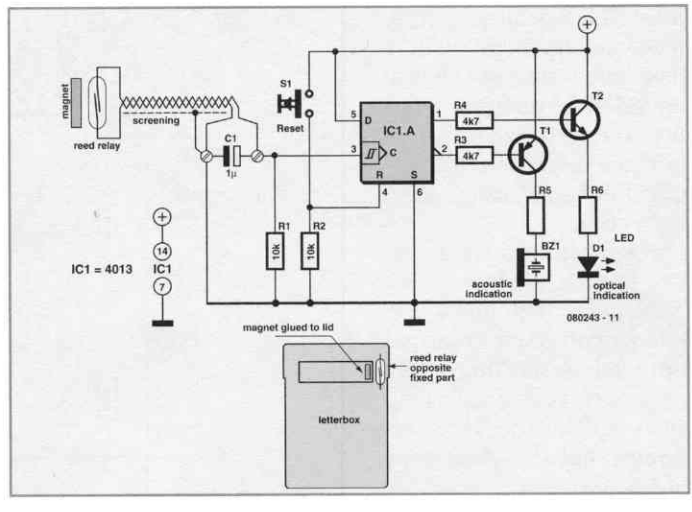

Or "Has the postman been yet?" This project was born out of the idea of avoiding having to go out to the post-box on a rainy day to see if the postman has been. Whereas in the UK the letterbox is often a slot in the front door, very remote road-side post-boxes are common in other countries.
Of course, it rains a lot less in summer, but it does still happen — and always just when you're expecting an important letter; what's more, not everyone is on holiday, and loads of people go straight indoors without checking their post-box.

It would be nice to have some way of displaying the status of the post-box. Until very recently, this type of (luxury) accessory was the privilege of private villas fitted with CCTV systems, the rest of us mere mortals not really feeling the need to spy on the postman using a CCTV camera. So the author decided to build a little circuit which is ridiculously cheap to build – in its most basic version, it ought not to cost more than about £ 3.
The author's project was built on prototyping board (perfboard) and uses only very standard components, the object of the exercise being to produce a simple but effective circuit. In its basic version, the circuit in question remembers if the postman has been (it doesn't actu-

ally detect the postman, but any kind of post slipped into the post-box by lifting the flap protecting the opening) and can indicate this 'event' visually (an LED) or audibly (buzzer or vocal alarm based on the ISD25xx). However, that the author soon ruled out the latter option because of the noise pollution it generates and the noticeably higher current consumption compared with just an LED.

Those readers who are keen to provide their system with a vocal-type alarm at any cost can take a look at the author's website, where he describes the system he used from the following supplier, before abandoning it. Conrad Electronics sell a module the size of a chewing-gum leaf for around £ 6 [1].
A glance at the circuit shows how staggeringly simple it is. The central component is a CD4013 logic IC (sequential logic), a D-type flip-flop with reset and priority set to '1', active high. You can find the truth table for the flip-flop in the inset. It's more complicated than it seems at first sight (CL = Clock, D = Data, R = Reset, S = Set, Q = Q output and $\overline{Q}$ = $\overline{Q}$ output).
You can see that this is only triggered once on a rising edge.
This edge is generated by the magnetic leaf switch, since the latter is sensitive to any significant variation in the magnetic field: the simple fact of opening the hinged flap of the post-box to put the post in can be used to produce a change of state in the reed switch. The diagram illustrates the respective positions of the reed switch and magnet.

CD4013 truth table					
CL	D	R	S	Q	$\overline{Q}$
Low>High transition	0	0	0	0	1
Low>High transition	1	0	0	1	0
High>Low transition	x	0	0	Q	Q
Immaterial	x	1	0	0	1
Immaterial	x	0	1	1	0
Immaterial	x	1	1	1	1

The author has all sorts of potential developments in mind for his circuit. If the subject intrigues you, why not drop by his blog [2] from time to time, to see how things are developing? — a basic knowledge of French is required, though.

(080243-I)

Web Links
[1] Author's website:
http://ludvol.free.fr/articles.php?lng=fr&pg=211
[2] Author's blog:
http://lespace-electronique.blogspot.com

017 Tiny RGB

HOBBY AND MODELLING

Tobias Flöry

This circuit is a good example of a microcontroller design using the absolute minimum of external components. The ATTiny15L microcontroller from Atmel has three of its outputs connected to an RGB LED (or three individual red green and blue LEDs) and produces changing colour patterns.

There are of course multicolour LEDs with a controller already built-in on the market but where would be the fun in the ready-built ver-

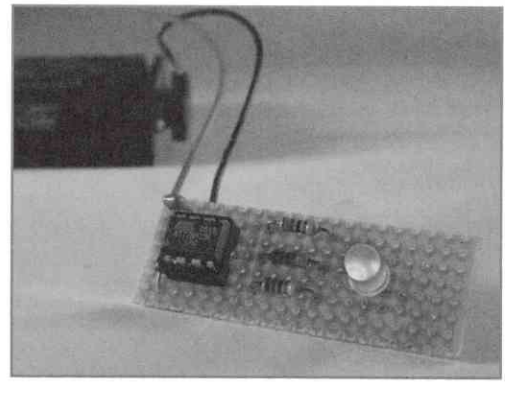

sion? You will certainly learn much more by building and programming the design yourself.

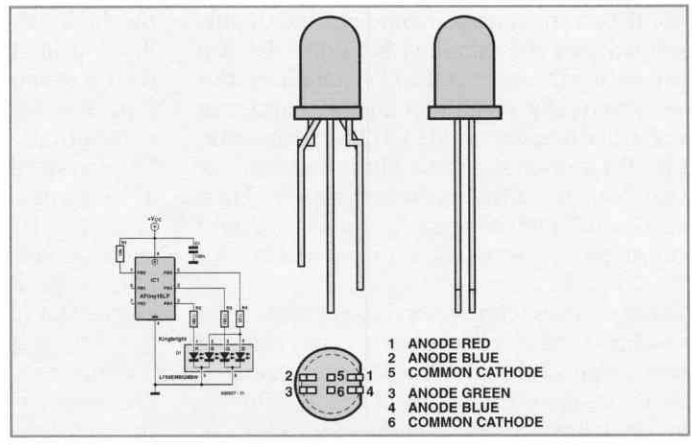

The brightness of each LED is controlled using Pulse Width Modulation (PWM). This is accomplished in software and the source code is available to download from *www.elektor.com* free of charge as file no. **050027-11.zip**. A pre-programmed controller (part no. **050027-41**) can also be ordered from the online shop at the same address.
The Kingbright RGB LED used in this circuit actually contains one red, one green and two blue LEDs. This helps compensate for the poorer output from the blue LEDs and for the relative insensitivity of our eye to the blue end of the spectrum. The light output thus can produce a better white colour balance.

The forward voltage drop of the blue LEDs (4.5 V) is also quite a bit higher than green (2.2 V) or red (2.0 V) so the value of the series resistor (R4) needs to be almost ten times smaller than the series resistors R2 and R3 used for the other LEDs to maintain a similar drive current.

Maximum current consumption of the circuit is approximately 35 mA but the average will be around 25 mA. More information on this design together with some other interesting designs can be found on the author's website at *www.floery.net* and look for 'tobi's corner'. (050027-1)

018 Operating Hour Counter

TEST AND MEASUREMENT

Thomas Rudolphi

These days there are all kinds of power/energy meters available which can measure the power consumption and the operating costs of mains powered appliances. A prerequisite is that the appliance has a mains plug. However, if the power consumption is known then the energy use of the appliance can also be determined in a much easier way.

The operating hour counter for mains appliances (230 V_{AC}) described here can measure the following, even in difficult to access places:

1 Number of times that it is switched on and off (up to 99999)

2 How long the load (lamp, fan, etc.) has been switched on (up to 99999:59:59 hours, resolution 1 s).

Because the power consumption of the load is known and using the information from the PIC, the energy consumption can then easily be determined using a Microsoft Excel file.

The whole circuit is built around an 8-pin PIC12F682 processor. The circuit draws very little current, so that it can be powered di-

rectly from the mains via two series resistors of 68k each (R1, R2). Zener diode D1 limits the positive voltage to 5.6 V and the negative voltage to –0.6V. At the node R2/ D1 there is therefore a, more or less, square wave voltage. D3 and C1 provide a filtered voltage for the PIC processor. D2 ensures that at input GP2 with internal weak pullup there is a square wave voltage of 5 V with a frequency of 50 Hz.
The data is sent every second via IrDA using an IR LED and at a baud rate of 38k4. With R3 the current during the short pulse is limited to about 35 mA.
With J2 the accumulated data can be reset (counter and time back to 0). To do this, the jumper has to be installed before the circuit is turned on, and it's removed again after the circuit is switched off.
The software has been written with the freeware 'SourceBoost' C compiler (see web links). It has the following functions:

- initialisation of the processor (init())
- writing the data to the internal EEPROM
- deriving time information from the 50 Hz zero-crossings (Realtime())
- sending of the IrDA data via an IR-LED (HandleIrDaCommunication())
- power-down detection after which the time information is written to the internal EEPROM.

In the Init() routine the processor is initialised and the ON/OFF counter is incremented by one and the value is saved in EEPROM. It also clears the data in the EEPROM if the jumper is in place.
The main loop (for(;;)) waits for the zero-crossing detection in the CheckZeroCross() routine. As soon as this arrives the time information is updated in Realtime(), which also sends part of the IrDA data every 100 ms. Only a small part of the data is sent to the IR-diode each time to prevent C1 from being discharged too much (relatively large current through the LED).
The CheckZeroCross() routine also checks whether the zero-crossing arrives every 20 ms. If not, then is the power has been switched off and the data has to be saved to the internal

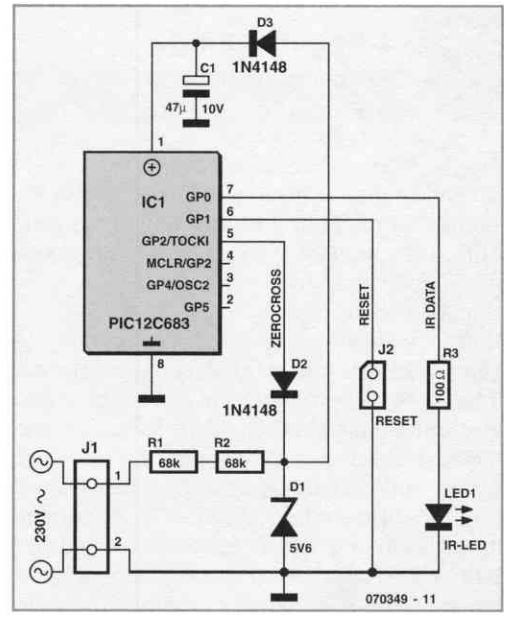

EEPROM as quickly as possible (before C1 discharges too deeply).
With a Pocket PC (PDA) (always fitted with an IrDA port as standard) and a terminal program (for example Zterm/PPC, see web links) the data can be very easily read out. The (ASCII-) output is in the form:

C=00000
H=00000:00:00

The circuit can easily (temporarily) be mounted inside, for example, a lamp fitting and must be connected in parallel with the load.

(070349-I)

Downloads
The source and hex code files for this project are available as a free download from *www.elektor.com*; file #070349-11.zip.

Web Links
Freeware C-compiler:
www.sourceboost.com/CommonDownload/Binaries/SourceBoostV6.85/sourceboostv685.zip
Terminal program for PDA:
www.coolstf.com/ztermppc

019 Charlieplexing

Do you think it is possible to drive an 8-digit, 7-segment display with only nine (9) connections? Yes certainly, and here we show you how it's done.

Normally speaking, a 7-segment display has eight LEDs (including the decimal point) that have to be controlled with eight inputs and one common output. The corresponding segments of all the displays are connected together and only one display is activated at a time because each display has its own common anode (or cathode) connection. This requires 8 + 8 = 16 connections, as shown in **Figure 1**. But it is certainly possible to do this with only nine connections, provided the multiplexing is done a little smarter. The notable feature in **Figure 2** is that the common output of each display is also connected to a segment (but each to a different segment). In addition it is necessary that the drive electronics is capable of both sourcing current and sinking current. This works as follows:

To keep things simple we've drawn only two displays in **Figure 3**. CC0 drives both a segment (of display 1) as well as a common cathode (of display 0). When this line is logic zero, the segments from display 0 can be illuminated when they are supplied with current. The segments of display 1 would also like to light up, but there is nowhere for their current to flow. This current has to flow via a segment (the leftmost one in this case) but that

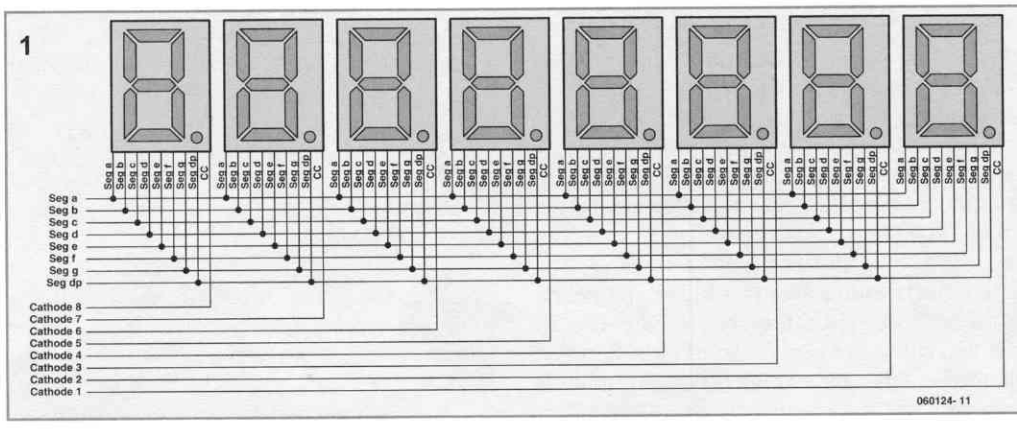

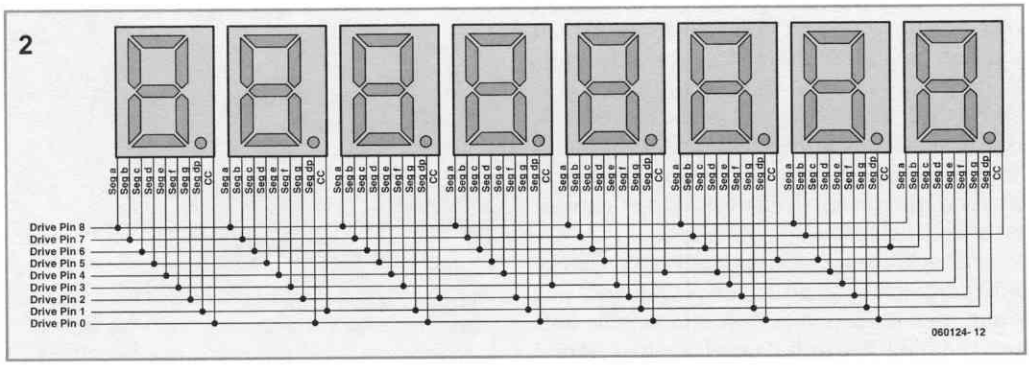

segment is connected in the reverse direction! Display 1 remains dark therefore and the same applies to the other six displays.
In **Figure 4** you can see what the path of the current is when CC1 is logic low. The segments from display #1 can now be illuminated.

(060124-1)

You can find more information in application note 1880 from Maxim:
www.maxim-ic.com/appnotes.cfm/appnote_number/1880

3

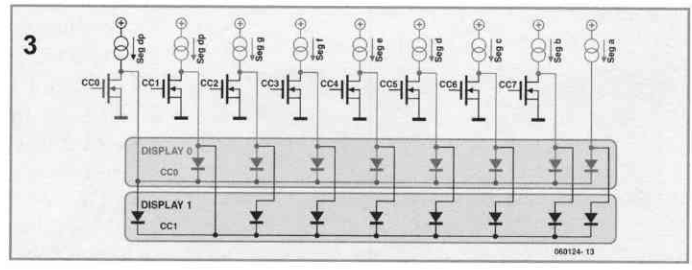

4

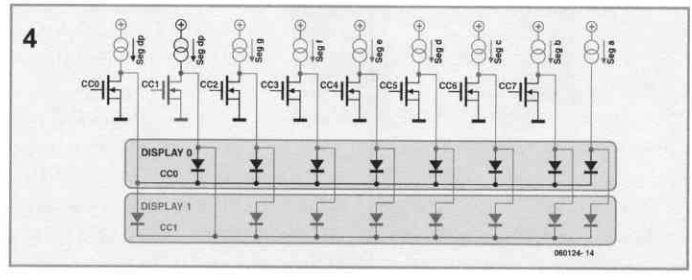

020 Phantom Supply for TV Antenna

POWER SUPPLIES, BATTERIES AND CHARGERS

Dr. Thomas Scherer

The author gave his father-in-law a USB TV stick as a present. After experimenting with it for a little while, they concluded that the performance of the device when used with a passive antenna was very poor. An active antenna, unfortunately, requires an extra power supply, which is not really practical when used with a laptop. Reason enough, then, to solve the problem properly; and in any case the author wanted to try to shake off his unwanted reputation with his fatherin-law as an amateur engineer!

The author took the USB stick home with him, with the idea of somehow or other adding the needed phantom power output to the device. Fortunately things turned out considerably simpler than he had expected.
As **Figure 1** shows, the stick is held together by a few screws, and so getting it apart is straightforward. So how does a phantom power supply work? Normally the antenna input is decoupled, as far as DC is concerned, from the main electronics by a capacitor. If we can somehow get 5 V onto the input in

1

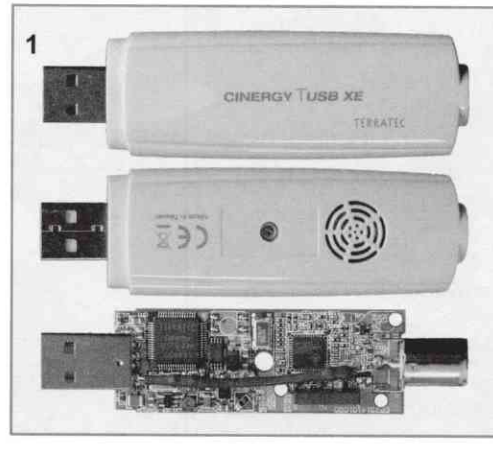

2

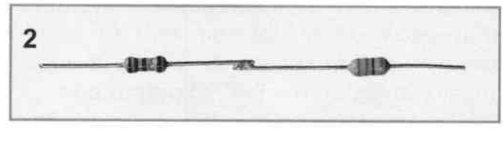

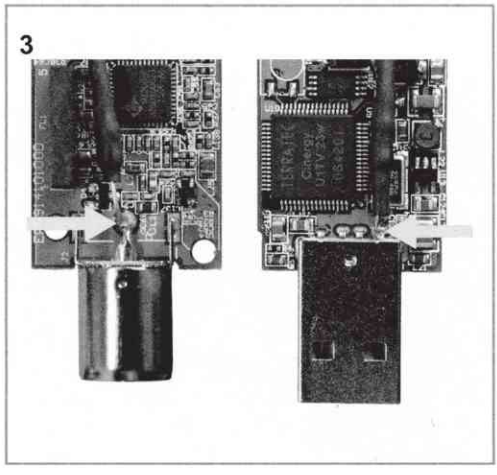

such a way that it does not short out the HF signal, we can provide a power supply to an active antenna. The current consumption of the amplifier in such an antenna is typically between 20 mA and 50 mA. This current (at +5 V) can easily be sourced from the computer's USB connector.
If we connect this supply via a coil to the antenna input the problem is solved: the coil will present a high impedance to the high frequencies in the TV signal.

In order to make the antenna input shortcircuit proof it is a good idea to add a 10 Ω metal film resistor in series with the coil. Using this type of resistor has the advantage that it will fail to an open circuit if overloaded for a prolonged period, and thus acts as a kind of fuse. The author used a 220 μH fixed inductor (any value above about 10 μH will do) with a DC resistance of 5.6 Ω. At a measured current draw of 30 mA the total voltage drop is around 0.5 V, which is entirely acceptable.
The two components were simply soldered together (**Figure 2**) and shrouded in heat-shrink tubing. The 'module' was then soldered into the USB stick: the arrows in **Figure 3** show where the solder connections were made. The 5 V pin of the USB plug is opposite the ground pin, which in turn is easy to identify as it is electrically joined to the shield of the plug. The final construction is shown at the bottom of Figure 1.

The modification should work with all types of USB TV sticks: analogue tuners can benefit as much as digital tuners from an active antenna.

(080503-I)

021 Programmer Board for the R8C/13

MICROCONTROLLERS

Jean Brunet

This board is a spin-off of the 10-pound 'R8C Tom Thumb' project published in the February 2006 issue of *Elektor Electronics*.
The author has added an LED behind the 5-V regulator and three small connectors (ground (0V); +5 V on the bottom left) to supply power to potential daughterboards. Connectors are linked to the R8C/13 output ports.
The layout of components has been selected in order to ensure easy manipulation. The connections are arranged in the upper area of the board, while the Reset button and Mode switch are found in the lower area. Enough space has been left at around module board so that it is easier to extract it without a special tool.
Following the advice of specialists on Elektor's R8C Forum, the author opted for a 7805 regulator.

Installation of components

The component type codes and characteristics can be found in the component list; a glance the overlay for the components, on the next page lets you identify everything.
Do not forget to install the wire links and resistor R5 between the links for the R8C module before plugging in the latter.

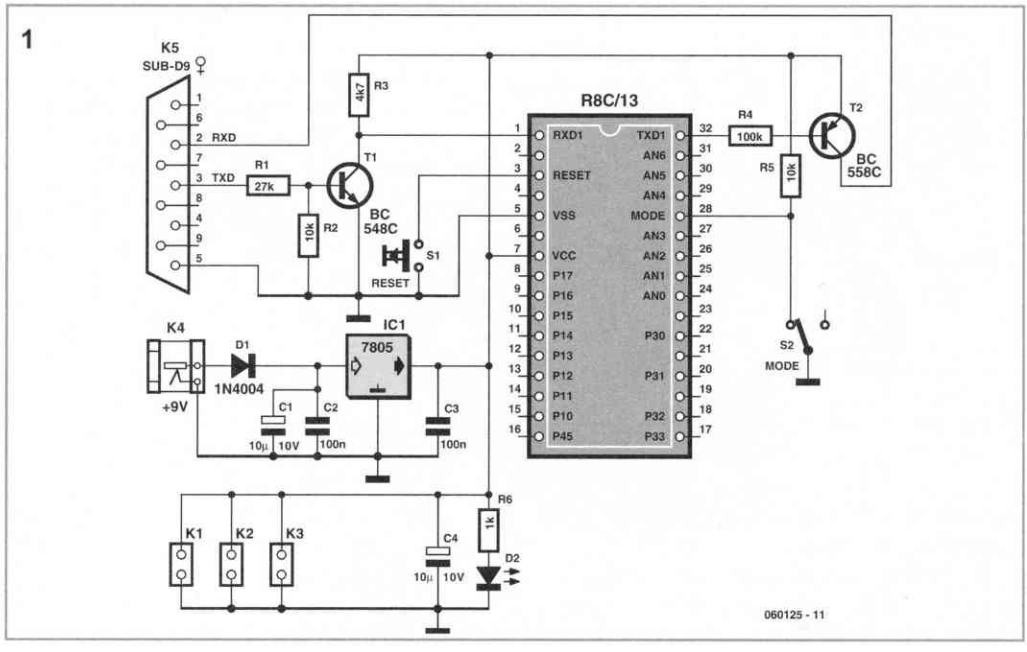

The reset pushbutton is found on the bottom, slightly shifted to the left, and the programming switch is found on the right.

Connectors linked to the R8C module are male but there is nothing to stop you from using female connectors, even though the male connectors seem to be sturdier. For the Tom Thumb module, use IC socket strip that can be sectioned.

The component overlay and other PCB artwork (Proteus format) are available on the author's web page devoted to this project. Lots of other information on the project may be

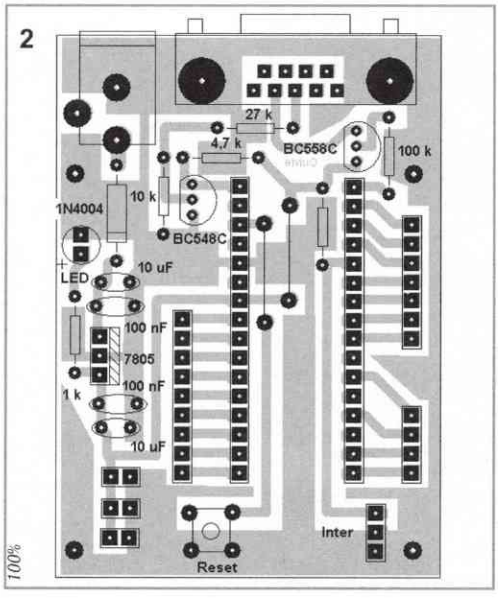

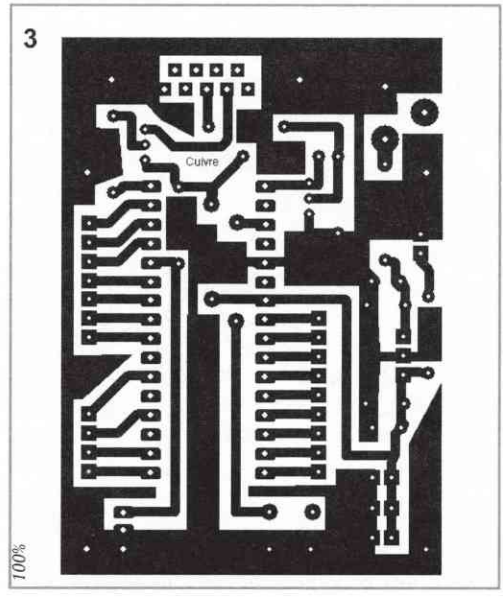

COMPONENTS LIST

Resistors
R1 = 27 kΩ
R2, R5 = 10 kΩ
R3 = 4kΩ7
R4 = 100 kΩ
R6 = 1 kΩ

Capacitors
C1, C4 = 10 µF/10V
C2, C3 = 100 nF

Semiconductors
D1 = 1N4004
D2 = LED, red, ∅3 or 5 mm
T1 = BC548C
T2 = BC558C
IC1 = 7805

Miscellaneous
S1 = pushbutton (reset)
S2 = slide switch, lead pitch 2.5 mm
K1, K2, K3 = 2-way pinheader
K4 = mains adaptor socket
K5 = 9-way sub-D socket (female), PCB mount
2 lengths of 16-way IC socket strip (for R8C module socket)

found on the R8C Service Page at *www.elektor.com*. There the artwork is reproduced in a slightly different form from what you are used to, but it works very well for making your own board.
In the file download, this diagram is a mirror image so that the ink comes into contact with the copper, which is preferable during UV illumination. If you are using the diagram printed in the magazine, you should mirror it to obtain the same result.
The author uses an inkjet printer and stacks three transparencies.

To utilise this board, all you need to do is insert the R8C/13 module in its socket, making sure the quartz crystal is turned toward the RS-232 base, as in the photo. Connect the RS-232 cable to the computer and then apply the supply voltage (adaptor supplying between 9 and 12 V).

Testing the board

To test the board, load the program *toggle_all.mot* or

Programmalisting toggle_all.mot

```
#include "sfr_r813.h"
long t;
void main(void)
{
/* Change on-chip oscillator clock to Main clock */
prc0 = 1;      /* Protect off */
cm13 = 1;      /* Xin Xout */
cm15 = 1;      /* XCIN-XCOUT drive capacity select bit
                  : HIGH */
cm05 = 0;      /* Xin on */
cm16 = 0;      /* Main clock = No division mode */
cm17 = 0;
cm06 = 0;      /* CM16 and CM17 enable */
asm("nop");    /* Waiting for stable of oscillation */
asm("nop");
asm("nop");
asm("nop");
ocd2 = 0;      /* Main clock change */
prc0 = 0;      /* Protect on */
prc2 = 1;      /* Protect off to write on pd0 */
pd0 = 0xFE;    /* bits 1 à 7 sur p0. an0 = p0_7,
                  an1 = p0_6 ... an6 = p0_1. p0_0 is not
                  present in the device. */
pd1 = 0xFF;    /* Set Ports be used for output */
pd3 = 0x0F;    /* just p3_0 ... p3_3 */
pd4 = 0x20;    /* just p4_5 */
while (1)      /* Loop */
  {
  p0 = 0xFE;
  p1 = 0xFF;
  p3 = 0x0F;
  p4_5 = 0x01;
  for (t=0; t<50000; t++);
  p0 = 0x00;
  p1 = 0x00;
  p3 = 0x00;
  p4_5 = 0x00;
  for (t=0; t<50000; t++);
  }
}
```

compile the program in the listing, whose purpose is to make all of the R8C/13 ports blink.
Now you are fully equipped to better discover the possibilities of the R8C/13 module and to conjure up super applications from this minimal configuration.

Programming
To program the module, all you need to do is to move switch S2 toward the bottom and press the pushbutton to reset the module. Start the FDT Simple interface. In the menu, as an option, check *Autodisconnect* and *Erase device before program*. Load *toggle_all.mot* and click on program flash. After confirming programming, move the Mode switch up and press S1 (reset). With the help of an LED and a 1-kΩ resistor in series, verify the operation of the R8C outputs one by one. If one of them does not produce LED flashing, you should verify the soldering.
The author, who contributed to a series of pages in the R8C section on the French Elektor site, has his own website at the following address:

http://perso.wanadoo.fr/asnora/R8C/platine_de_programmation.htm.

(060125-1)

022 Camera = Data Store

AUDIO, VIDEO AND PHOTOGRAPHY

Stefan Hoffmann

Actually this is a travel tip, not a circuit. If you own a digital camera, then you've got a memory card for computer data as well. Camera memory cards are primarily for storing pictures of course but they are also ideal for backing up data you might need on a journey. Cameras are not fussy about data formats and with today's memory capacities of typically 2 GB on a cheap SD card, these memory cards provide more than enough storage for photos. This makes memory cards ideal for storing all kinds of emergency information such as details of your reservations, handy addresses, PDF copies of air tickets, travel permits and loads more.
If you prefer this data to be independent of the camera you could also keep a separate SD card with this information in your pocket in case your luggage is lost, your briefcase is stolen or your wallet goes walkies. These memory cards are so compact that you could even keep one below a padded insole inside your shoe...

(080152-I)

023 DCF77 Preamplifier

RF (RADIO)

Rainer Reusch

A popular project among microcontroller aficionados is to build a radio-controlled clock.

Tiny receiver boards are available, with a preadjusted ferrite antenna, that receive and demodulate the DCF77 time signal broadcast from Mainflingen in Germany. DCF77 has a range of about 1,000 miles.
All the microcontroller need do is decode the signal and output the results on a display. The reception quality achieved by these ready-made boards tends to be proportional to their price. In areas of marginal reception a higher quality receiver is needed, and a small

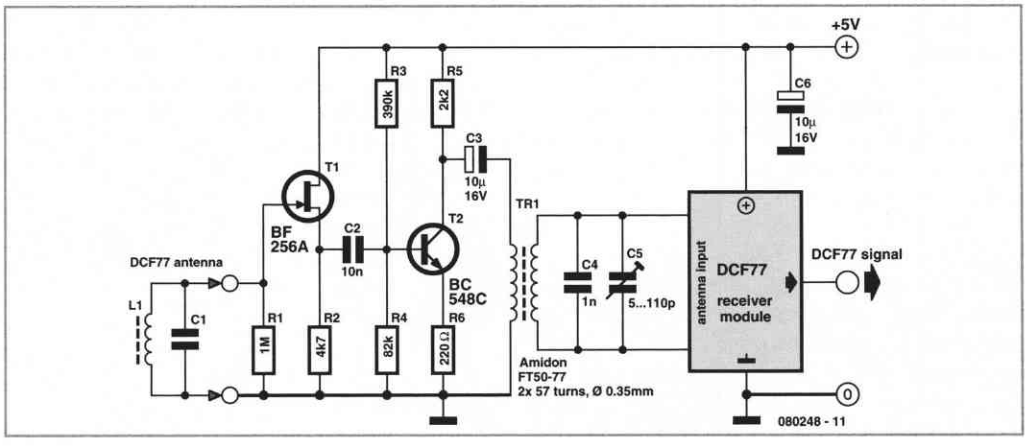

selective preamplifier stage will usually improve the situation further.

The original ferrite antenna is desoldered from the receiver module and connected to the input of the preamplifier. This input consists of a source follower (T1) which has very little damping effect on the resonant circuit. A bipolar transistor (T2) provides a gain of around 5 dB. The output signal is coupled to the antenna input of the DCF77 module via a transformer. The secondary of the transformer, in conjunction with capacitors C4 and C5, forms a resonant circuit which must be adjusted so that it is centred on the carrier frequency.

An oscilloscope is needed for this adjustment, and a signal generator, set to generate a 77.5 kHz sine wave, is also very useful. This signal is fed, at an amplitude of a few millivolts, into the antenna input. With the oscilloscope connected across C4 and C5 to monitor the signal on the output resonant circuit, trimmer C5 is adjusted until maximum amplitude is observed.

It is essential that the transformer used is suitable for constructing a resonant circuit at the carrier frequency. Our prototype used a FT50-77 core from Amidon on which we made two 57-turn windings. It is also possible to trim the resonant frequency of the circuit by using a transformer whose core can be adjusted in and out. In this case, of course, the trimmer capacitor can be dispensed with.

(080248-I)

024 Easy Home Remote Control

HOME AND GARDEN

Carlos Ferreira

Happens to everyone! You're comfortably installed on your sofa watching TV and then all of a sudden you need to get up to turn the lights on or off, or to draw the curtains.

Many living rooms these days have a double head-up ceiling light, a floor lamp and an electric window/curtain control. The idea is to control all these devices, and more, with the TV remote control.

The circuit designed for maximum indolence in front of the telly is built around the PIC16F84. The 'F84 was chosen mainly because of its internal EEPROM, which is necessary to store the user-programmable infrared codes. To control such devices as mentioned above, four relays are used, working together

with lamp switches in a two way configuration.

Looking at the circuit, the DIP switch block and the associated resistor array connected to microcontroller port A are used to program the IR codes and to select the operation mode for all the outputs (described further on). The IR sensor is connected to port line RB7 on the PIC. The lower nibble (set of 4 bits) of port B is used to control the output relays via 1-k resistors and BC547 transistors. It is also used to control multifunction indicator LED D1 on port line RB6.

Components C1, C2 and X1 generate the microcontroller clock signal while C3 helps to keep the supply voltage as clean as possible. The circuit should be powered by a 5-V regulated supply capable of providing enough current for the four relay coils (approximately 140 mA per relay) plus a few mA for microcontroller, IR sensor and LED.

The circuit is designed to respond to infrared commands coded to the Philips RC5 protocol. The protocol consists in a frame of 14 bits. The first two bits, always at '1', are used to start the frame. The third bit is the flip bit, this bit indicates when a key is pressed repeatedly. The next five bits are used to identify de system which the message is sent. The last six bits represent the sent command.

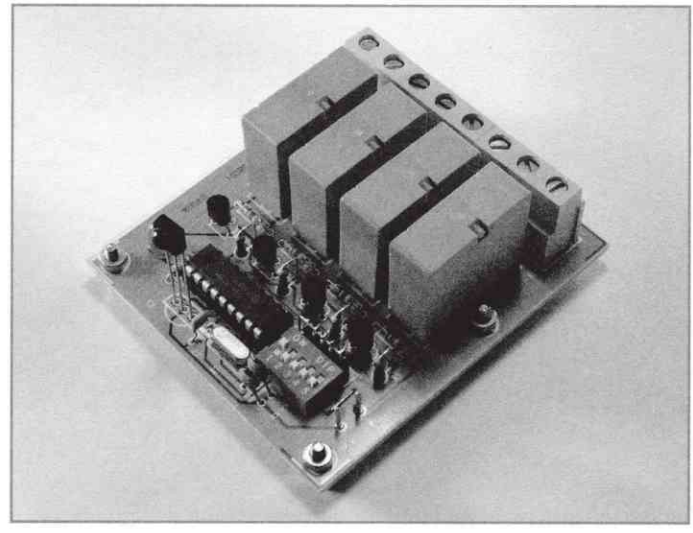

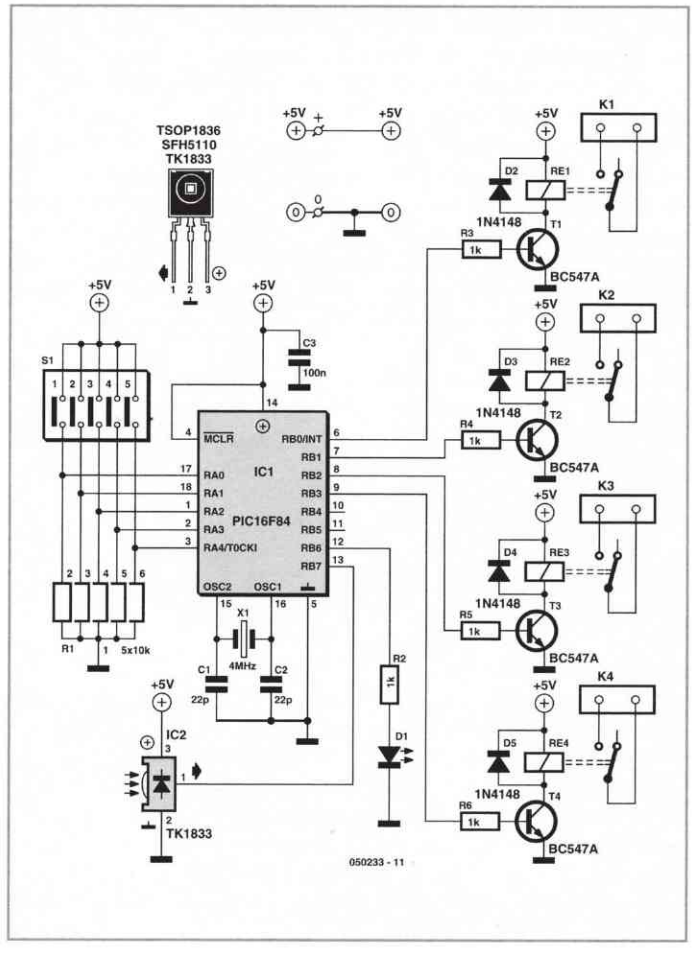

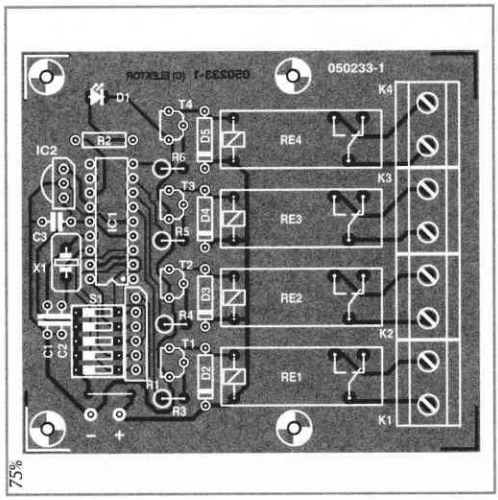

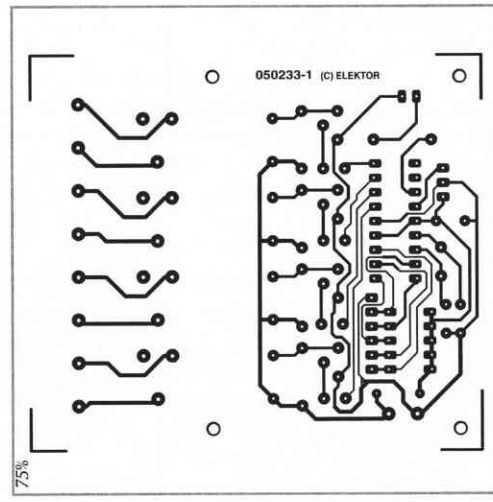

Note that in RC5 speak a logic '1' is a transition from 0 V to Vcc, and logic '0' is a transition from Vcc to 0 V, where the period of one bit is 1.7778 ms. Many articles on RC5 have appeared in Elektor Electronics.

The software developed for the project is stored in the PIC microcontroller. It allows four different RC5 codes to be saved and used to control the four outputs.

COMPONENTS LIST

Resistors
R1= 5-way 10 kΩ SIL array
R2-R6 = 1 kΩ

Capacitors
C1, C2 = 22 pF
C3 = 100 nF

Semiconductors
D1= LED, low current
D2-D5 = 1N4148
IC2 = IR receiver module, e.g. TSOP1836, SFH5110 or TK1833
T1-T4 = BC547

Miscellaneous
X1 = 4MHz quartz crystal
IC1 = PIC16F84, programmed, order code 050233-41 (see Elektor Shop pages or website)
PCB, ref. 050233-1 from The PCB Shop
Re1-Re4 = PCB mount relay, 5V coil, 140mA

Table 1: Programming Mode		
DIP switch ON (S1)	**DIP switch OFF (S1)**	**Set code for**
#1	#2, #3, #4	relay 1
#2	#1, #3, #4	relay 2
#3	#1, #2, #4	relay 3
#4	#1, #2, #3	relay 4
#1, #2	#3, #4	all relays OFF
Note: LED blinks 1 second after code set.		

Table 2: Working Mode		
DIP switch (S1)	**OFF = Toggle Mode**	**ON = Pulse Mode**
#1	toggle relay 1	1-second pulse at relay 1
#2	toggle relay 2	1-second pulse at relay 2
#3	toggle relay 3	1-second pulse at relay 3
#4	toggle relay 4	1-second pulse at relay 4
Notes: Led blinks 1 second after any action on relays. Fast blinking of the LED means bad RC5 reception or correct RC5 code but no action associated with it.		

For example, your TV remote may be able to control five systems: TV (default), VCR, DVD, AMP, SAT. If, for example, you do not have VCR then the relevant IR codes are available for Easy Home Control. If your remote control is not compatible with RC5 codes, you can buy a cheap universal remote control to do the job.

To avoid the relays changing state owing to a power cut in your home, the state of the relays is saved in the microcontroller EEPROM and retrieved every time the PIC re-initialises. The actuation of electric curtains differs from lamps as it's necessary to send a short pulse to the relays.

To make the home control more versatile it is possible to control all relays (configurable by the DIP switches) in one of two modes:

- toggle between ON and OFF positions with memory for lamps;
- output pulse for other devices like electric windows-curtains.

If you're a keen energy saver, it is also possible to program an IR code to turn off all the relays (and save 5 V·140 mA = 0.7 watts per relay).

The Easy Home Remote Control is configured as follows.

1 Switch the circuit on with all DIP switches set to OFF.
2 Flip ON switch #5 (switch connected to RA4/TOCK1) to enable programming mode. Using **Table 1**, set the other switches as required to save desired IR codes in EEPROM.
3 Flip OFF switch #5 to select working mode. Using Table 2, configure the other switches to select the desired relay mode.

In working mode a fast-blinking LED (D1) means reception of IR codes with no associated function; 1-second blink means programmed IR code was received and corresponding action was performed. In programming mode, the 1-second blink means the IR code was saved in the microcontroller EEPROM.

The assembly code file for the PIC used in this project is available as a free download from the Elektor Electronics website. File number **050233-11.zip** may be found by clicking on Magazine → 2006 → July/August.

The PIC is also available ready-programmed from the Publishers as order code **050233-41**.

(050233-1)

Warning
Screw contacts on K1-K4 and PCB tracks to the relay contacts may carry the mains voltage. All relevant precautions must be observed in respect of electrical safety.

025 Piezo-powered Lamp

MISCELLANEOUS ELECTRONICS AND DESIGN IDEAS

Burkhard Kainka

Energy is becoming ever more expensive, and some fresh ideas are needed. There are already human-powered devices on the market, most of which employ a dynamo to generate power. It is also possible to recover energy from a piezo crystal of the sort found, for example, in the loudspeakers in greetings cards. Making use of this device is relatively straightforward.
Piezo crystals can generate voltages of many tens of volts when given a firm enough prod with a finger to bend the baseplate. The

charge moved, however, is relatively small and the crystal is effectively a capacitor with a capacitance of only around 20 nF to 50 nF. This means that we need larger-scale storage in the form of an electrolytic capacitor.
The piezo crystal can be treated as an alternating current source. We therefore need a rectifier and a reservoir capacitor. Pressing the metal surface of the transducer ten or twenty times with a finger will charge the electrolytic in steps to the point where it has enough charge to drive a LED. The circuit is a 'charge pump' in the full sense of the term.
When the button is pressed the electrolytic discharges into the LED, which emits a brief, but bright, flash of light.

(080385-I)

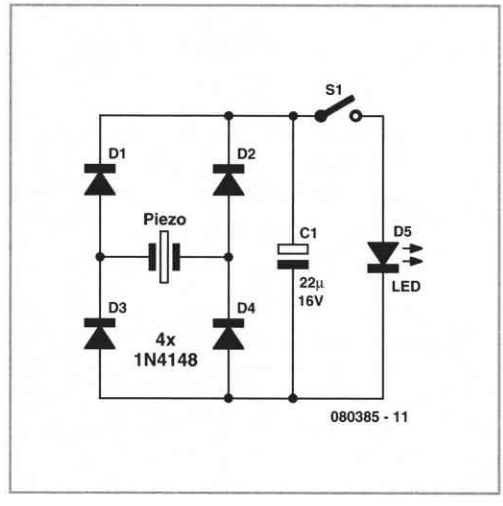

026 DC-coupled Audio Amplifier

AUDIO, VIDEO AND PHOTOGRAPHY

Peter Bitzer

Designs for audio amplifiers with DC coupling to the load are not often encountered these days, even though they offer definite advantages. One advantage is that there is no need for the complication of a second (symmetric) power supply; another is good frequency and phase response. Also, no special electrolytic capacitors are needed for voltage stabilisation, and switch-on 'thump' is much reduced.

To try to rescue this class of circuit from obscurity the author has designed a headphone amplifier working along the lines illustrated in **Figure 1**. It consists of a voltage divider, a voltage follower and the loudspeaker in the headphones, whose other side is connected to the junction of two electrolytic capacitors, providing the virtual earth. The potential at this point is, of course, half the supply voltage. All we need to do now is suitably couple in the audio signal to be amplified.

Figure 2 shows a practical realisation of this idea in the form of a stereo headphone amplifier. The amplifier itself consists of IC1 and

1

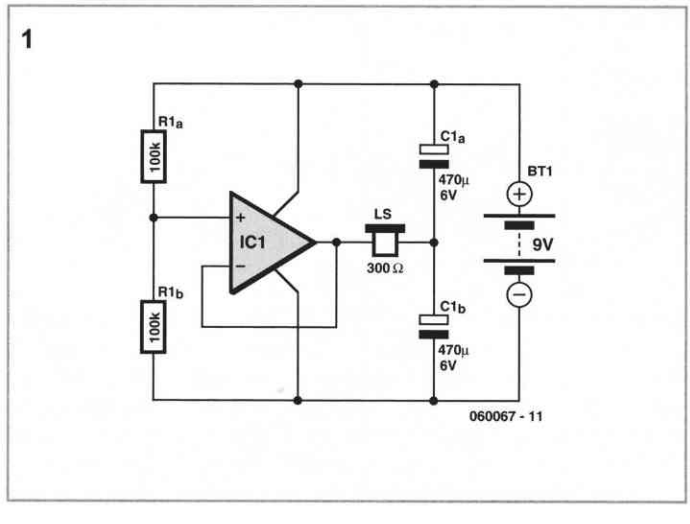

P1, R3 and R4 (giving a gain of 11). This part of the circuit demands no further explanation, and the same goes for the voltage divider mentioned above, formed by R1a and R1b. The signal is coupled in via the potentiometers.

C2 and R2 have a special purpose: C2 connects the bottom end of the potentiometers (ground for the input signal) to the virtual earth. However, this capacitor creates a feedback path which can lead to oscillation of the amplifier under some circumstances.

R2 damps this tendency to oscillate. It is possible to calculate suitable values for these components, but it is better to determine them by experiment. C2 must be sufficiently large that stray electric fields do not cause unacceptable hum at the output. R2 must be sufficiently large that the voltage at the amplifier's virtual earth stabilises quickly enough after switch-on.

The polarity of the electrolytic is unimportant as no significant voltage appears across the network. It is possible to try the circuit out with the C2/R2 network shorted and observe the behaviour of the circuit at switch-on using an oscilloscope.

Depending on the degree of asymmetry in the circuit, the voltage at the virtual earth point can take a considerable time to stabilise.

(060067-1)

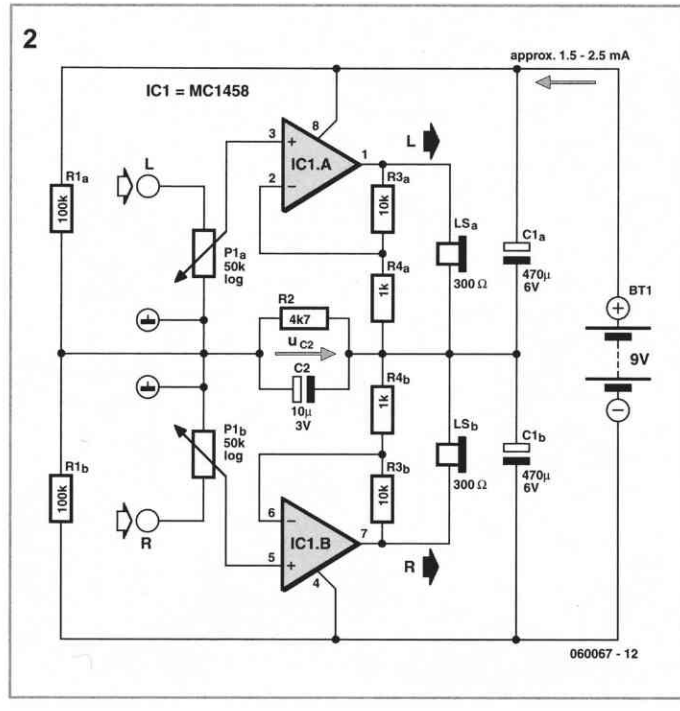

027 Tent Alarm

HOBBY AND MODELLING

Stefan Hoffmann

Although this alarm is designed to protect valuables left in a tent, it can also be used as a baggage alarm (either on or in one's bags) and in similar situations.

The tent alarm can be triggered by many different sensors. One is a current loop, connected to pin PB4 of an ATtiny13 microcontroller: this could be a thin wire which would be broken by a prospective pilferer caught off his guard. Alternatively, it can be a reed switch contact normally held closed by a magnet, arranged so that the budding burglar will accidentally move the magnet and thus open the contact. This could be used to protect a door or a zip fastener securing a tent.

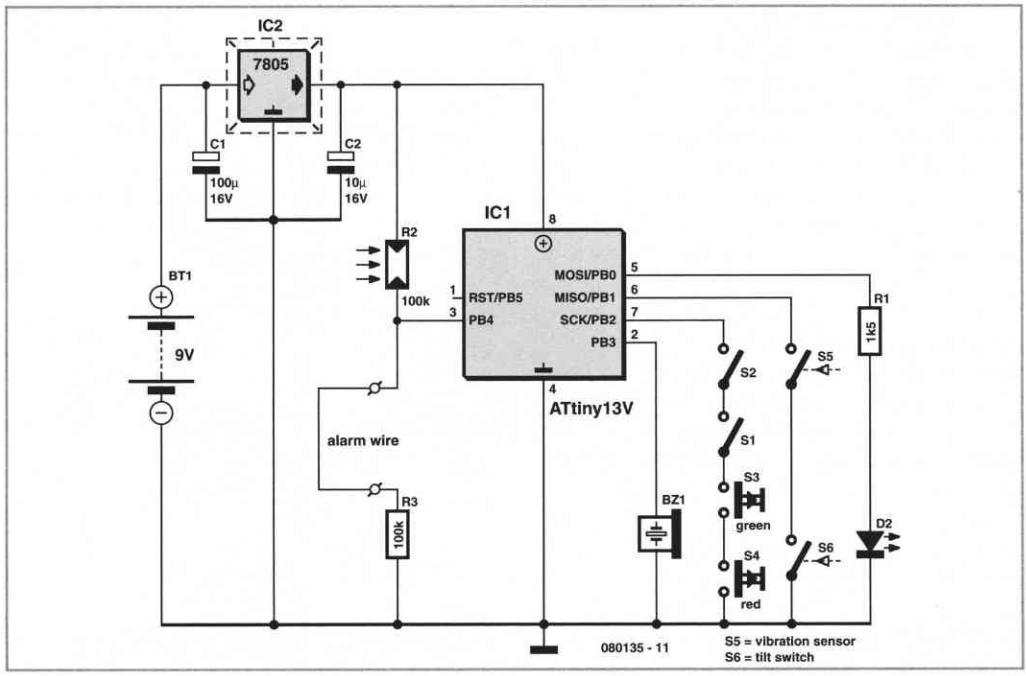

Another sensor connected to PB4 is an LDR (light dependent resistor). If the LDR is left in a dark place (such as under a sleeping bag) the thief will trigger the alarm if he moves the bag to expose the sensor to light. The resistance of the LDR is about 100 kΩ in the dark and just a few ohms in the light. If only the light sensor is to be used, the alarm wire (or reed contact) socket can be shorted using a jumper. If the LDR is not to be used, it can either be (temporarily) taped over to exclude light from it or (more permanently) replaced by a 100 kΩ resistor.

A third sensor which can trigger the alarm is a vibration detector (S6), which is wired in series with a tilt sensor. The tilt sensor allows the vibration sensor to be disabled when the alarm unit is left upside-down. When the tilt sensor contacts are open, PB1 cannot be pulled low and so no alarm can be triggered. The unit also features a number of push-buttons and switches connected to PB2. The arrangement and labelling of these buttons and switches is described below.
On the left of the device lies switch S1 with the (deliberately misleading) legend 'Power on/off'. Of course, this does not turn the alarm on and off. On the right of the device is switch S2 with the legend 'Speaker on/off', which, naturally, does nothing of the sort. As you have probably already guessed, the red and green buttons also have nothing to do with arming or disarming the alarm.

These decoys should be enough to annoy and delay all but the most resourceful of robbers. Naturally, once the alarm has been triggered by uncovering the LDR, it will not turn off again if the LDR is then covered.

The only way to disable the alarm is to set S1 and S2 in the correct positions (namely, 'Power on' and 'Speaker on') and hold down the two buttons simultaneously for five seconds. More complicated deactivation procedures can be programmed into the software, in case you are worried that some light-fingered Elektor reader (not that such a person exists) will be able to steal your valuables after having seen this article.

The circuit requires a supply voltage of between 3.6 V and 5 V. In the circuit diagram we

show a power supply made using a 9 V battery and a 5 V voltage regulator.
The ATtiny13 microcontroller belongs to Atmel's AVR family, and can be programmed using BASCOM. Source and object code files, including fuse settings, are available in a ZIP archive that is available for free download from the Elektor website. The source code can be modified to suit your own application and then recompiled using the free version of BASCOM. The software arranges matters so that the processor enters sleep or power-down mode when the alarm is correctly deactivated; there is no other way to turn the device off. To wake the device up the switches must be set correctly (both to 'on') and the unit shaken briefly. The LED blinks twice to confirm that the device has woken up; after a brief delay of approximately three seconds the alarm is armed. This state is indicated by three flashes of the LED. While the alarm remains in the armed state the LED blinks briefly once every few seconds.
When the alarm is triggered the red LED lights immediately. If it is not disarmed, the alarm sounds after a short pause.

To disarm the unit, both switches again need to be in the 'on' position as described above and both buttons must be pressed. After a double flash, whether the LED is on or off indicates whether the buttons must then be pressed again or not.

stefankhoffmann@yahoo.de (080135-I)

028 Contrast Control for LCDs

MICROCONTROLLERS

Heino Peters

The adjustment control for the contrast of an LC-Display is typically a 10-k potentiometer. This works fine, provided that the power supply voltage is constant. If this is not the case (for example, with a battery power supply) then the potentiometer has to be repeatedly adjusted. Very awkward, in other words.

The circuit described here offers a solution for this problem.

The aforementioned potentiometer is intended to maintain a constant current from the contrast connection (usually pin 3 or V_o) to ground. A popular green display with 2×16 characters 'supplies' about 200 μA. At a power supply voltage of 5 V there is also an additional current of 500 μA in the potentiometer itself. Not very energy efficient either.

Now there is an IC, the LM334, which, with the aid of one resistor, can be made into a constant current source. The circuit presented here ensures that there is a current of 200 μA to ground, independent of the power supply voltage. By substituting a 2.2-kΩ potentiometer for R1, the current can be adjusted as desired. The value of R1 can be calculated as follows:

$$R1 = 227 \cdot 10^{-6} \times \frac{T}{I}$$

Where T is the temperature in Kelvin and I is the current in ampères.

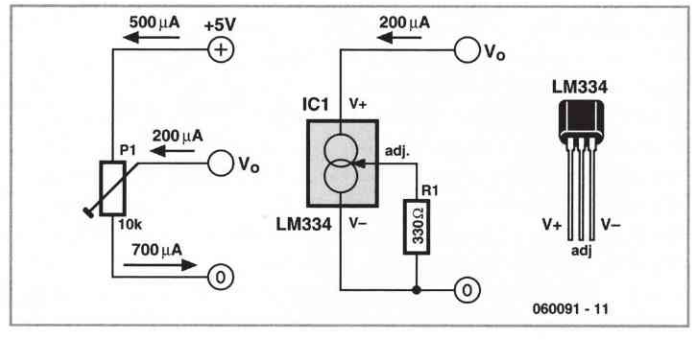

In our case this results in:

$$R1 = 227 \cdot 10^{-6} \times \frac{293}{200 \cdot 10^{-6}} = 333\,\Omega$$

Note that the current supplied by the LM334 depends on the temperature. This is also true for the current from the display, but it is not strictly necessary to have a linear relationship between these two. Temperature variations of up to 10° will not be a problem however. This circuit results in a power saving of over 25% with an LCD that itself draws a current of 1.2 mA. In a battery powered application this is definitely worth the effort! In addition, the contrast does not need to be adjusted as the battery voltage reduces.

When used with LCDs with new technologies such as OLED and PLED it is advisable to carefully test the circuit first to determine if it can be used to adjust the brightness.

(060091-1)

029 Minimalist Oscilloscope

TEST AND MEASUREMENT

Burkhard Kainka

If you are the proud owner of an old oscilloscope tube, you may be interested in using it once more for its original purpose. All you need are the right voltages on the right pins: in practice you may need to peer closely inside to find out which pins on the base correspond to the acceleration and deflection electrodes, in particular if there is no part number to be seen on the tube. The tube we had for experimental purposes was a 7 cm model of unknown provenance.

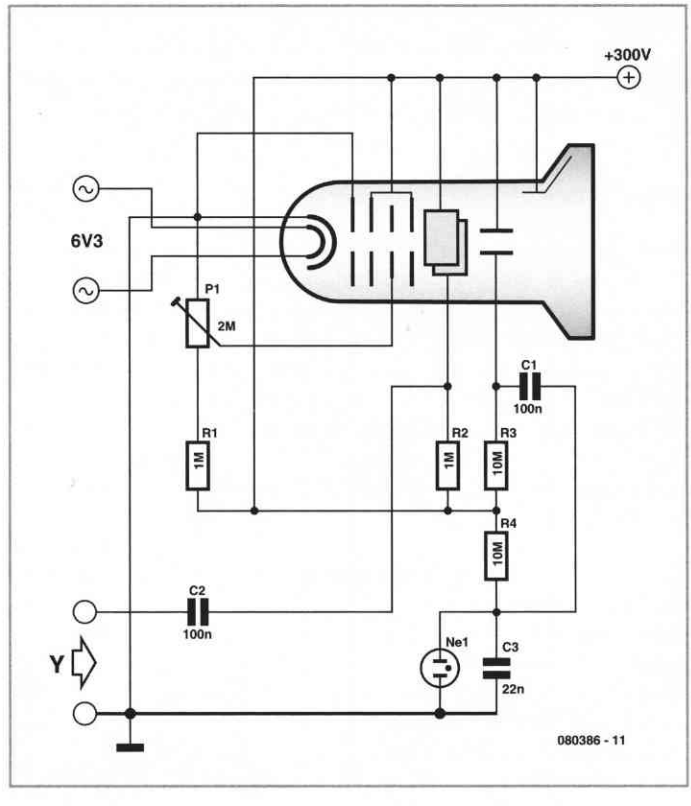

So the first step is to establish which pins correspond to the heater, cathode, grids, deflection plates, and anode. With this done we can make our simple oscilloscope as follows: connect the Y input via a suitable capacitor to one of the Y deflection plates; for X deflection we use a neon lamp oscillator to generate a timebase; and with a focus regulator circuit we have a complete oscilloscope. Operation of the horizontal deflection oscillator is visible as the gentle flickering of the neon lamp. Whenever the voltage across the parallel-con-

nected capacitor reaches the strike voltage of the lamp, it is discharged with a brief pulse of current. It is hard to imagine a simpler way to generate a sawtooth waveform.

The supply voltage of 300 V is adequate for simple experiments, even if the tube is rated for operation at 1000 V or even more. Now, if a signal is applied to the Y input, we should be able to see the waveform on the screen. It must be admitted that the design's sensitivity, linearity, trace size, bandwidth and triggering facilities leave a little to be desired.

Nevertheless we have shown how little circuitry is required to make a real working oscilloscope.

(080386-I)

030 Adjustable Current Limit for Dual Power Supply

POWER SUPPLIES, BATTERIES AND CHARGERS

Malte Fischer

This current-limiting circuit, shown in this example as part of a small bench power supply, could in principle be used in conjunction with any dual-rail current source. The part of the circuit to the left of the diagram limits the current at the input to the dual voltage regulator (IC4 to IC7) so that it is safely protected against overload.

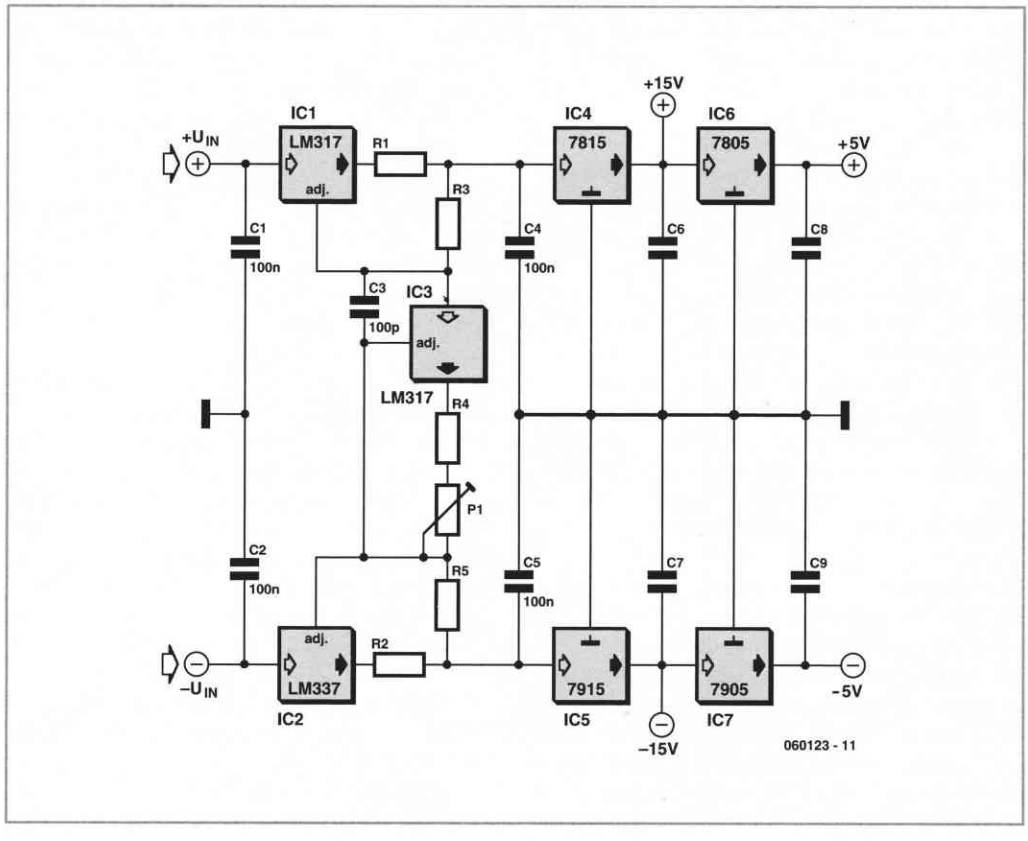

The circuit shown produces outputs at ±15 V and ±5 V.

The voltage regulators at the outputs (7815/7805 and 7915/7905) need no further comment; but the current-limiting circuit itself, built around an LM317 and an LM337, is not quite so self-explanatory. The upper LM317 (IC1) manages the current limiting function for the upper branch of the circuit. The clever part is the combination of the two resistors R1 and R3 between the output and the adjust input of the regulator.

In the basic LM317 configuration in current-limiting mode (i.e., as a constant current source), just one resistor is used here, across which the regulator maintains a constant voltage of 1.25 V. The current is thus limited to a value of 1.25 V/R. To obtain a maximum current of 1 A, for example, the formula tells us that the necessary resistor value is 1.25 Ω. Unfortunately it is not practical to try to build an adjustable dual-rail current-limited supply in this way, as stereo potentiometers with a value of 1.2 Ω are extremely difficult, if not impossible, to obtain.

We can solve the problem using the technique of dividing the resistor into two resistors. Only the resistor at the output of the LM317 (R1) serves for current sensing. The second resistor (R3) causes an additional voltage drop depending on an additional (and adjustable) current. When the sum of the two voltages reaches 1.25 V current limiting cuts in. This makes it possible to adjust the current limit smoothly using the current in the second resistor (R3). This can be done simultaneously in the positive and negative branches of the circuit, as the diagram shows.

It would of course be wasteful to arrange for the current flowing in the second resistor to be of the same order of magnitude as the current in the main resistor. We therefore make the value of the second resistor considerably greater than that of the main one. If the main resistor (R1) has a value of 1.2 Ω (giving a maximum current of 1 A), and the second resistor (R3) a value of 120 Ω, the necessary voltage drop is achieved using an extra current of 10 mA. The current limit now is adjustable till (almost) 0 A. If the current in this branch is reduced to zero, the current limit will be 1 A.

For the negative branch of the circuit the LM337, along with resistors R2 (1.2 Ω) and R5 (120 Ω), performs the same functions.

A further LM317 (IC3) is used to set the overall current limit point by controlling the additional current. The resistance used with this voltage regulator, wired as a current sink (R4 in series with P1) determines the additional current and therefore also the output current in both the negative and positive branches of the circuit. Since we also want the total resistance of R4 and P1 to be 120 Ω, we use a value of 22 Ω for R4 and 100 Ω for P1 to give a wide adjustment range for the output current from a few milliamps to 1 A.

The minimum input voltage for the circuit depends on the desired output voltage and maximum output current. The input to the 7815 should be at least 18 V. We should allow approximately a further 1.2 V + 2.2 V for the voltage drops across IC1 and R1. If we allow a total of 4 V for the current limiting circuit in each branch, this means that the circuit as a whole should be supplied with at least ±22 V to produce well-regulated outputs at ±15 V and ±5 V.

If the symmetrical input voltage is to be provided using a single transformer winding, two diodes and two smoothing capacitors, it important to ensure that the capacitor values are sufficiently large, as there will be considerably more ripple than there would be with full-wave rectification. Depending on the application, capacitors C6 to C9 at the outputs of the fixed voltage regulators can be electrolytics with a value of 4.7 μF or 10 μF.

To improve stability, electrolytic capacitors can also be connected in parallel with C1, C2, C4 and C5.

(060123-1)

031 Underwater Magic

HOME AND GARDEN

Ludovic Mézière

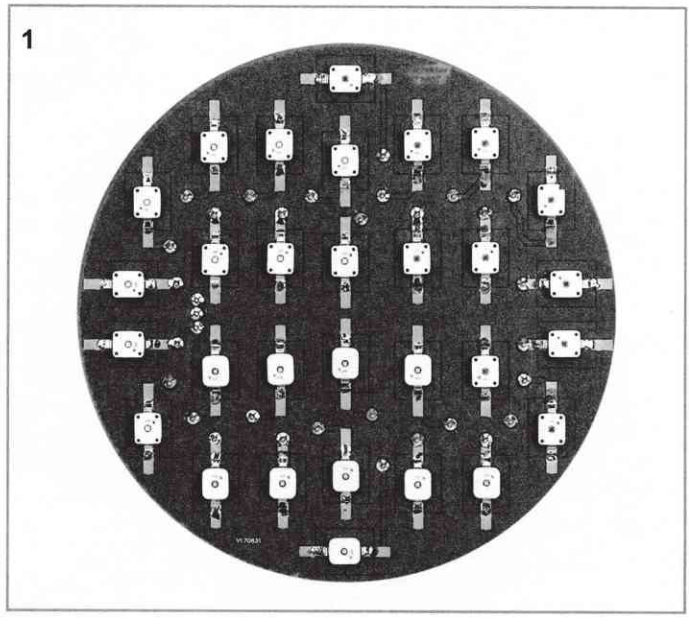

If we were looking for a slogan to sell this project in some mailorder catalogue, we might well have chosen the slogan "16 Million Colours under Water in Your Swimming Pool" as its subtitle. In just a few months, we've seen increasingly 'visible' applications for (high) power LEDs. After all, was it not Philips that paid for the illuminations on some of the most famous avenues in the world?

The author of this project took it into his head to give a festive look to his swimming pool as cheaply as possible. The use of a ready-made PC PSU module to supply the power makes it possible to reduce the overall cost of this project very significantly.

Principle

Three PWM (pulse width modulation) generators drive three groups of high-brightness red, green, and blue LEDs using an 8-bit word per colour – which theoretically gives the possibility of lighting the water in 16 million different shades.

Circuit

A quick glance at the circuit might make us wonder if the designer hasn't forgotten something, given the excellent 'readability' of the electronics employed.

A microcontroller and no less than three strips of ten or so LEDs, each with its own dropper resistor. Each strip is driven by a transistor, and there you have all the ingredients of this recipe.

The potential of microcontroller IC1, an AT90S8515P from Atmel, is admittedly underexploited, but the choice of it is justified by

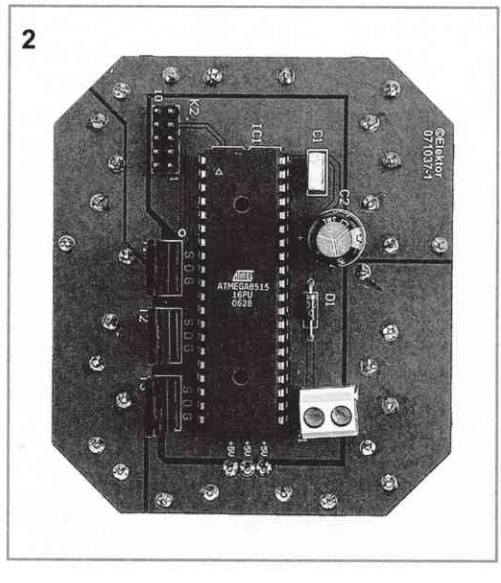

3

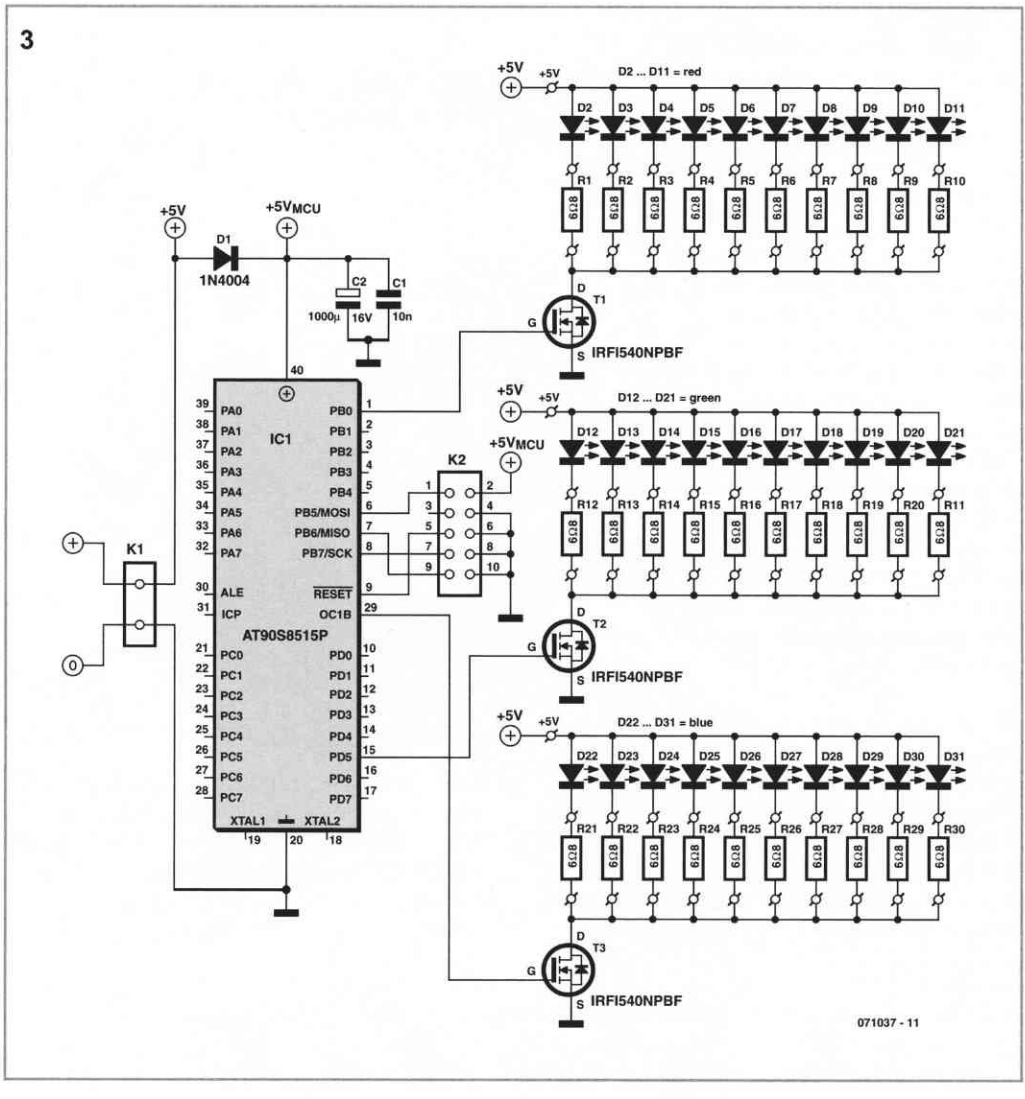

the presence of three PWM drivers in the same package, as well as by its very affordable price and excellent availability. The board has an ISP connector (In System Programming), K2, to allow for future software updates.

The three PWM outputs drive type IRFI540NPBF MOSFET transistors T1–T3, which have a power dissipation rating that's easily sufficient for this application. You may like to fit them with a small heatsink, which will be enough to dissipate the small amount of heat produced by the transistor switching. These transistors each drive ten or so LEDs.

The spot draws a whopping maximum current of nearly 10 amps a t 5 V , meaning that a powerful PSU is needed.

Building one yourself would turn out expensive. So the solution to this cost issue is to opt for a PC PSU module, which usually has no problems providing some 30 A at 5 V, for only a modest sum. And there you have it – everything has been said that needs to be about the electronics employed.

The aspect we're going to tackle in the next paragraph is very important, given its implications...

Construction

As shown in the introductory photo, the whole of the electronics fits onto a pair of printed circuit boards.

The LED board is round so it can be fitted easily into a cylindrical body that will conveniently slide into a masonry orifice provided for it in the wall of the swimming pool. The second, smaller board is rectangular, with truncated corners, and it carries the power electronics.

The dropper resistors in the LED supply lines also act as spacers for the two boards. The first step in construction is to fit the thirty LEDs on the track side of the round board. Take care to get the polarity correct.

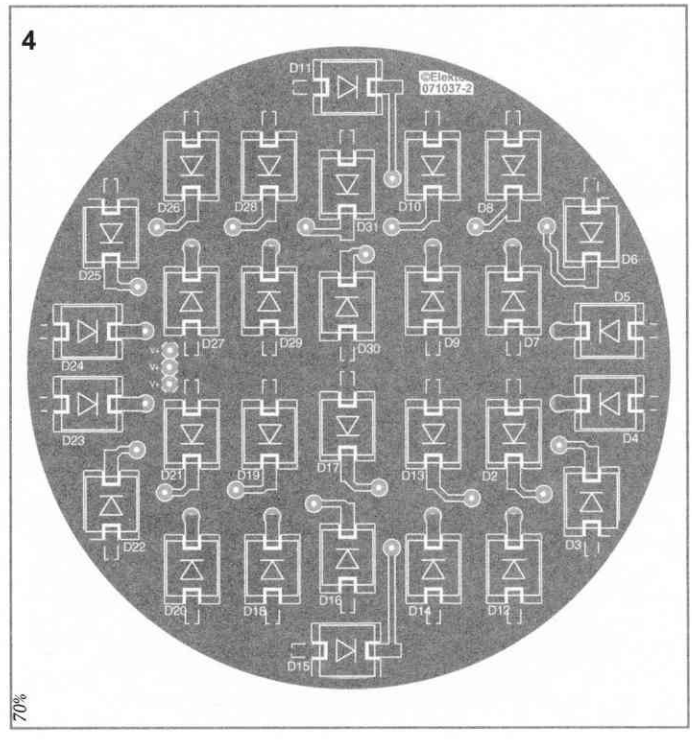

This done, we end up with a board as shown in the second photo. You can then move on to fitting the resistors, which should be pushed fully home into the holes provided for them on the LED board and then be soldered into place.

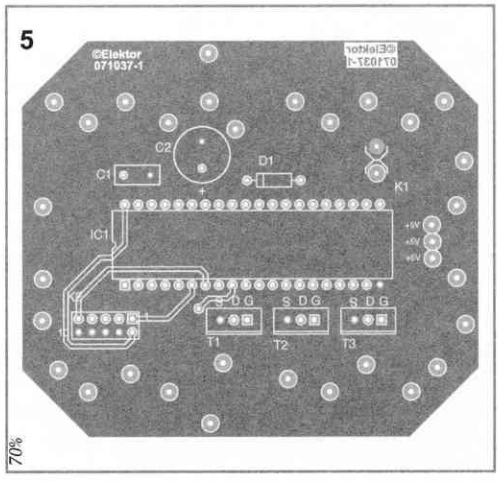

The 3 remaining adjacent lands close to the microcontroller and marked '+5V' should be fitted with a piece of insulated solid wire the same length as the final spacing of the two boards.

Now it's time to move on to building the controller board. IC1 could be fitted into a socket (with spring contacts) just in case. Start by soldering the smaller components, capacitors, diode (only fitted if the voltage supplied by the PC PSU is being increased, see next paragraph; otherwise replaced by a wire link). Next, fit the transistors (paying attention to their orientation – their heatsinks should face the outside of the board) and socket K2 (fitting it later once the two boards are piggy-backed is tricky because of the difficulty of access under the controller board).

Once the two boards are built and after having taken the trouble to check your work, you'll be able to mount the controller board piggy-back onto the LED board, taking care to leave a certain distance between them so as to ensure a little air circulation (confined). To

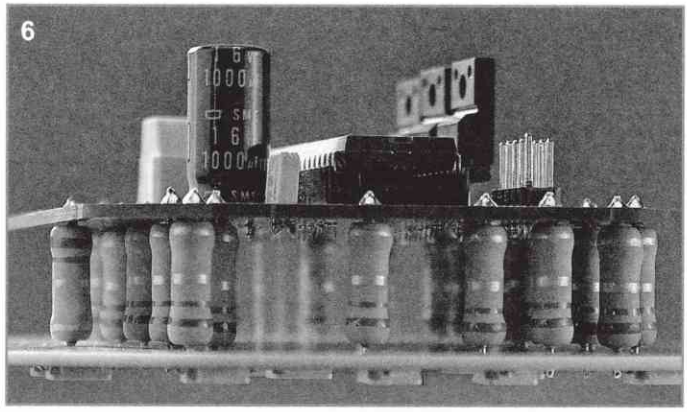

COMPONENTS LIST

Resistors
R1-R30 = 6Ω8/3 W

Capacitors
C1 = 10 nF
C2 = 1000 µF 16V radial

Semiconductors
D1 = 1N4004
LED1-LED10 = Golden Dragon blue LB-W5KMEZGY-35 from OSRAM
LED11-LED20 = Golden Dragon green LT-W5KMHZKX-25 from OSRAM
LED21-LED30 = Golden Dragon red LR-W5KMHXJX-1 from OSRAM
T1-T3 = IRFI540NPBF, isolated
IC1 = AT90S8515P, Atmel, programmed with hex file from archive 071037-11.

Miscellaneous
K1 = 2 solder pins
K2 = 10-way DIL (2×5) pinheader
Heatsink for the 3 transistors (optional)
PC power supply
PCBs, ref 071037-1 (controller) and 071037-2 (LED) available from *www.thepcbshop.com*

do this, all you need do is to slip the leads of the 3 W resistors fitted to the LED board into the corresponding holes all round the edge of the controller board.
This operation requires a certain dexterity; you can insert the leads of the first row of resistors, then angle the board slightly so as to insert the leads of the next resistors, cut 2 or 3 mm shorter, and so on. Once all the resistors are in place, you can solder them and trim the leads off.

Now let's move on to the PC PSU module, which needs a little 'check-up' – in fact, it needs a slight modification: its green lead (signal: ps_on) must be connected to ground to enable the power supply to start up. Keep only all the black leads (ground) and all the red leads (+5 V) – the other output wires/ leads can all be cut off.

The available power supply allowing, it's worth increasing the 5 V level up to 5.6 V by adjusting the potentiometer in the regulator circuit – this will increase the brightness of the LEDs a little bit. If the voltage is increased in this way, the microcontroller supply is brought back down to 5 V by the use of series diode D1 in the microcontroller supply line.
Clearly, if the voltage is not adjusted, D1 should be omitted and a wire link fitted in its place.

This done, the 5 V lines from the PC PSU can be connected to the controller board. It is fitted with a connector, K1, for this purpose, in the form of a pair of pins. Take care to correctly identify the positive (+, closest to the silk-screened legend K1 and the microcontroller) and negative poles (–, the other pin). The three points marked '+5V' should have already been connected to the matching points on the LED board when the two boards were connected together.

Now all that remains, after checking the quality of your work one last time, is to try it out for the first time. Whatever you fancy, don't look straight at the front side of the LED board (to see if all the LEDs are working!). It should be obvious if it's working OK, the light will gradually change colour. But don't expect to be able to see all 16 million different shades ;-).

Installation

The spotlight should be fitted into a position provided for it in the swimming pool, either in place of a standard spot, or, as the author did, in place of the return flow of a swim-jet system. A sheet of Perspex® fastened using nylon bolts with a silicone seal will ensure it is nice and watertight. A sheet of 'White Frost' – a type of diffusing filter used in video – is fitted behind the plastic window for better diffusion of the light from the LEDs.

The PSU module is fitted well out of harm's way in the pool pump space, connected to the piggy-backed boards via an extension of a few metres. To avoid excessive volts drop, this extension should use the thickest cable practical.

Software

The software written for the microcontroller to execute is very simple. It includes several subroutines whose function is to light or extinguish a colour instantaneously, and light or extinguish a colour in progressive mode. The primary loop calls these subroutines to create the effects. Each PWM (pulsewidth modulation) receives a value between 00 and FF that determines the mark/space ratio of the signal driving the bases of the transistors. The first part of this loop makes the spot change gradually from one colour to another by combining the three primary colours.
The second part, much more dynamic, comprises coloured flashes that appear faster and faster until you get a near-stroboscopic effect.

Results

As you probably can imagine, at night the result is impressive. The cat seems to likes it a lot, too, though the wavelength of the red light is soon attenuated as it travels through the water.

(071037-I)

Web Links
[1] AT90S8515P datasheet
www.atmel.com/dyn/resources/prod_documents/DOC0841.PDF

Downloads
The artwork for the two PCBs (071037-1 and 071037-2) can be downloaded from the Elektor website at *www.elektor.com*.
The source code and .hex files for this project (071037-11.zip) are also available free from *www.elektor.com*

032 Harmonic Generator with Single Opamp

RF (RADIO)

Gert Baars

Quartz crystals have the property that their amplitude/phase characteristic repeats itself at frequencies that are an uneven multiple of the fundamental frequency. There are so-called overtone crystals that are cut in such a manner that they possess this property to a greater extent.

However, in principle, any crystal may be used on one or more of its harmonic frequencies. Harmonic generators based on transistors may operate satisfactorily on the 3rd harmonic, but if the 5th or 7th harmonic are wanted, the circuit becomes less reliable and requires frequent adjustment.

This circuit is based on a single, fast opamp and oscillates readily at the 3rd, 5th or 7th harmonic. The opamp is set up as a non-inverting amplifier with the quartz crystal connected between its output and the non-inverting input. The circuit amplification, which in principle must be unity to ensure oscillation, is determined by the network formed by R4, R5 and trimmer capacitor C3. This network is frequency-dependent such that the

amplification increases as the frequency rises. The network gain is adjustable with C3. The setting of the capacitor must be such that the gain is too small for oscillation at the fundamental frequency, but sufficient for, say, the 5th or 7th harmonic.

The author uses a standard computer crystal of 10 MHz. Depending on the setting of C3, the circuit provides a stable output at frequencies between 50 and 70 MHz. It should be noted that these frequencies are multiples of the series fundamental frequency of the crystal.
Tuning is carried out simply with a frequency counter. The output frequency is varied with C3. When the capacitor is roughly at the correct setting, the frequency 'locks' as it were at the harmonic. The area where locking occurs is not welldefined, however, so that the setting of C3 is not critical. When tuning is completed, the output frequency is crystal-stable.
In principle, the circuit may be used for frequencies of up to 100 MHz, when the values of R4 and R5 may need to be reduced. When a crystal with a higher fundamental frequency, say, 15 MHz, is used, the circuit may be tuned to the 3rd harmonic, that is, 45 MHz.
The circuit should be tested with a supply voltage of 5–9 V (the maximum supply voltage for the IC is 12 V).

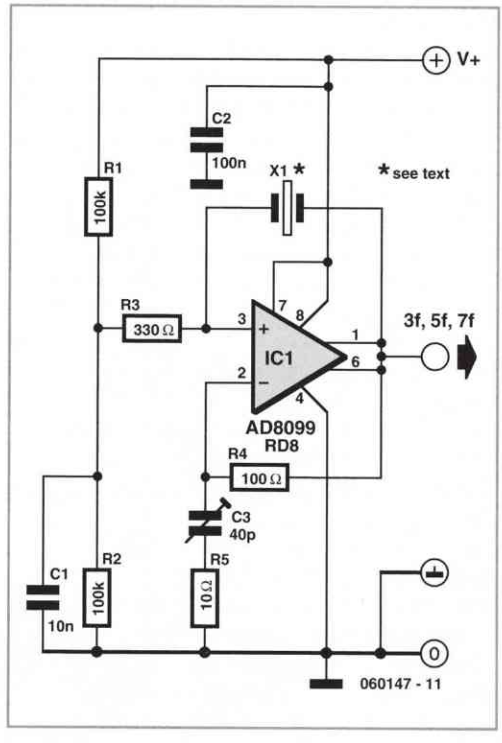

The peak to peak output voltage has a value of about that of the supply voltage less a few volts. The output can provide a current sufficient to drive relatively low-impedance loads.

(060147-1)

033 USB ⇔ RS-232 Cable

COMPUTERS AND INTERNET

Antoine Authier

This project lets you conveniently connect any computer with USB ports directly to a simple, traditional connector – the 9-pin RS-232 (anyone remembers it?). It converts the electrical signals from a USB ⇔ serial TLL convertor to the RS-232 standard. So in a nutshell, it converts a USB port into a standard but basic serial port: only the four basic sig-

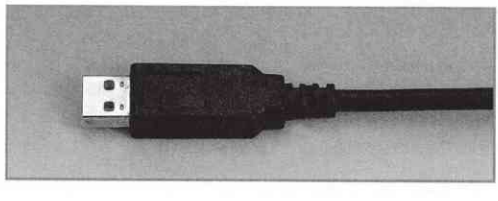

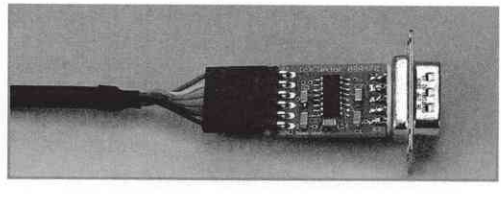

nals are available. The USB ⇔ serial convertor chosen here is the TTL-232R USB to TTL UART cable from FTDI, available as part number 080213-71 and described in the June 2008 issue (see the Elektor website).

The TTL logic signals available on the cable output are converted into RS-232 signals on the tiny board described here.

The voltage level adaptor is a MAX3232 from Maxim. This industry-standard part comprises two transmitters and two receivers, ideal for our USB ⇔ serial convertor, which itself offers the four fundamental signals of an RS-232 standard port, namely TXD (Transmit Data), RTS (Request To Send), RXD (Receive Data) and DTR (Data Terminal Ready).

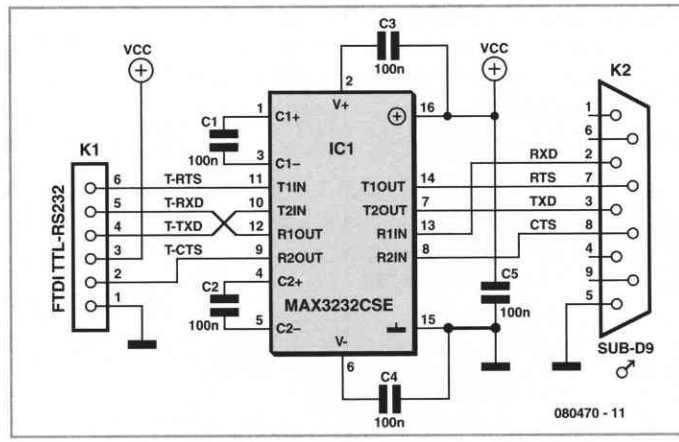

COMPONENTS LIST

Capacitors
C1-C5 = 100 nF 25V (SMD 1206)

Semiconductors
IC1 = MAX3232CSE (or -ESE)

Miscellaneous
K1 = 6-way right-angled SIL pinheader
K2 = 9-way cable mount sub-D plug (male)
FTDI TTL-232R cable (5.0 V), Elektor Shop #080213-71
Piece of large diameter heatshrink sleeving
PCB, ref. 080470-I from *www.thepcbshop.com*

Charge pumps built into the IC provide the 12 V levels required by the RS-232 standard. This circuit works equally well from 3.3 V as from 5 V supply rails and supports both these levels on its logic input and outputs. In theory, it also ought to work correctly with the 3.3 V version of the cable mentioned above, the TTL-232R-3V3 – however, we haven't checked this experimentally in the lab.

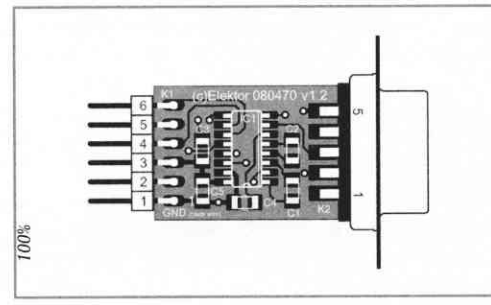

Instead of the complete cable, you can use just the TTL-232R-PCB module (or TTL-232R-PCB-3V3 for 3.3 V), currently only the former is available from the Elektor Shop.

The 1206 cases size SMD (surface mount device) components used here make it possible to achieve a compact board, while still being easy enough to handle by constructors who may not be very used to this type of component, and who, in building this useful little project, will be able to practice and get an idea of how nimble-fingered they are before attacking more complex circuits using SMDs. No surprises in the construction of the project. Start by soldering the IC and the capacitors, then the connectors.

Use a right-angle 0.1-inch SIL pinheader to reduce the pull on the cable. With a straight header, the cable and board would form a cumbersome and inelegant right angle. The sub-D connector may be cannibalized from an

old cable, as long as it's a male one (i.e. a plug, not a socket). Slide the board between the two rows of pins on the connector and solder these directly onto the PCB copper islands provided.

To finish off, you can protect the whole thing by slipping it into a piece of heatshrink sleeving of suitable diameter.

(080470-I)

Web Links
http://pdfserv.maxim-ic.com/en/ds/MAX3222-MAX3241.pdf
www.ftdichip.com/Products/EvaluationKits/TTL-232R

Downloads
The PCB artwork for the board is available for free download from our website (*www.elektor.com*); file #080470-1.zip.

034 Slave Flash Trigger I

AUDIO, VIDEO AND PHOTOGRAPHY

Hermann Sprenger

The flash that is built into digital cameras is designed for indoor photography. At subject distances of greater than five metres or so, the light is usually not powerful enough to take a satisfactory picture. Unfortunately most such cameras do not include a shoe for an external flashgun, and so a light-triggered slave flash is called for.
The flash built into the camera produces a very rapid change in light intensity which is picked up by a phototransistor in the slave. The pulse is transmitted via C1 to the transistor, which then briefly shorts the contacts on the slave gun together. The sensitivity of the device can be adjusted using P1. The circuit can be connected to the shoe contacts of the slave flashgun using a coaxial cable, or, with space permitting and a nimble bit of DIY, can be built inside it.

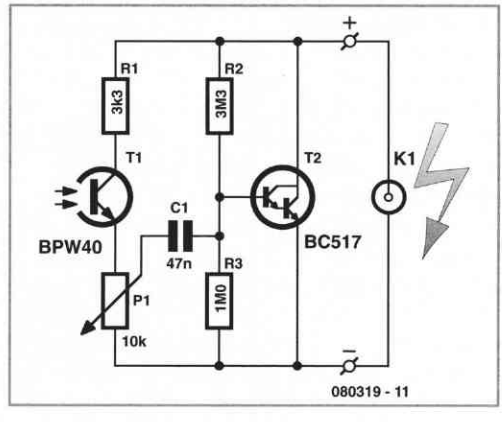

The circuit is not suitable for use with flashguns which have a voltage of more than 20 V across the trigger contacts, or with cameras that emit a number of 'pre-flashes' before taking the picture proper.

(080319-I)

035 Miller Capacitor

MISCELLANEOUS ELECTRONICS AND DESIGN IDEAS

Gert Baars

There are amplifier circuits that have capacitance between the input and output. If the gain is positive, this can lead to oscillations. If the gain is negative, another outcome is the result. We can deduce this from the following theoretical circuit.

An amplifier with a negligibly low output impedance, an infinitely high input impedance and gain A has feedback in the form of capacitor C (refer **Figure 1**). The gain A is negative. In addition, input current I, input voltage U and output voltage U_o are also drawn in. The input current I is equal to I_c and the input voltage U is equal to $U_c + U_o$. U_o in turn is equal to the product $A \cdot U$. From this follows that

$$U_c = U - U_o = U \cdot (1 - A)$$

Substituting into the formula the current that flows through a capacitor, $I_c = C \cdot (dU_c/dt)$ results in

$$I = C \cdot \frac{dU(1-A)}{dt}$$

We rearrange this as

$$I = (1-A) \cdot C \cdot \frac{dU}{dt}$$

Now we can see that the gain determines the relationship between I and C. C appears to be larger by a factor of $(1-A)$ (note: if A is negative, you can actually speak of a factor $1+A$ larger).

This is called the Miller effect. The apparent (larger) capacitance is called the Miller capacitance. When designing signal amplifiers you need to take this capacitance into account. We can actually use this Miller capacitance in other ways. If we make A variable, with an adjustable resistor for example, we create a variable capacitor. For this purpose we conceived the following schematic (see **Figure 2**).

C_m is the apparent capacitor between the input of the circuit and ground. If we connect a signal generator via a series resistor to the input and measure the input voltage with an oscilloscope, we can easily determine the corner frequency. JFET-opamp A1 is necessary to prevent R1 from appearing in parallel with C_m and affecting the corner frequency. A2 is the actual (inverting) amplifier. The gain of A2 is equal to P1/R1. C is the capacitor which is enlarged artificially. The remaining components only serve to set the operating point of the circuit. C_b blocks any DC voltages and needs to be relatively large, for example 25 times the maximum C_m.

From the test results it appears that C_m is indeed equal to $(1+P/R1) \cdot C$. C_m can be varied with a potentiometer from about 560 pF to 12 nF.

As is usually the case, there are a few limitations in practice. The input signal may not be too large. Otherwise, the AC voltage across

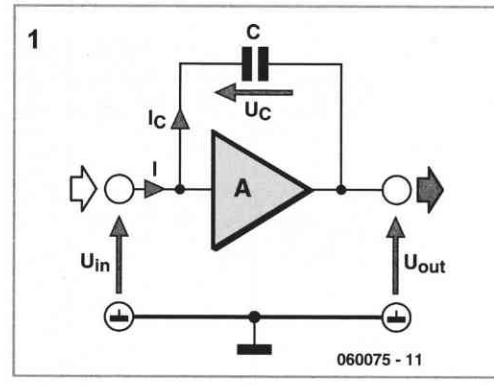

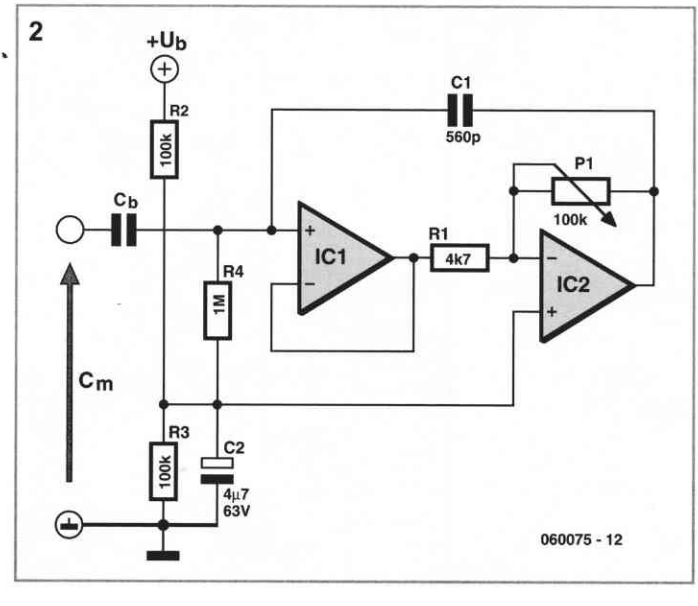

C_m will cause clipping at the output of the second opamp. At maximum C_m, the gain of A2 is about 20 times. The peak-to-peak value of the input voltage may therefore not be more than about 1/20 of the power supply voltage. The circuit will always work well for smaller signals, provided the frequency is not too high.

For A1 and A2 we used an LF356 and TL081 respectively. These are mainly used for frequencies not exceeding 100 kHz. Very fast JFET opamps could extend the useful frequency range to applications in the RF-range. For LF applications we could also use a dual opamp for A1 and A2, such as the TL082.

The value of capacitor C can be changed to suit the application. With opamps of the type AD8099 with a *C* of 22 pF we can make a (tuning) capacitor with a value from 22 to 440 pF, for use up to 30 MHz. The alternative, a varicap diode that can be varied in capacitance over a range of 20 times (or more) is not used in practice very much any more. Other applications for this circuit are, for example, adjustable LC-filters for audio applications.

(060075-1)

036 Temperature Switch

HOME AND GARDEN

Heino Peters

The LM335 is a low-cost temperature sensor with a range of –40 °C to +100 °C. In this circuit, it is used to show whether the outside temperature is below freezing or above 20 °C. In the first case, you have to worry about icy roads and the outside taps freezing, while in

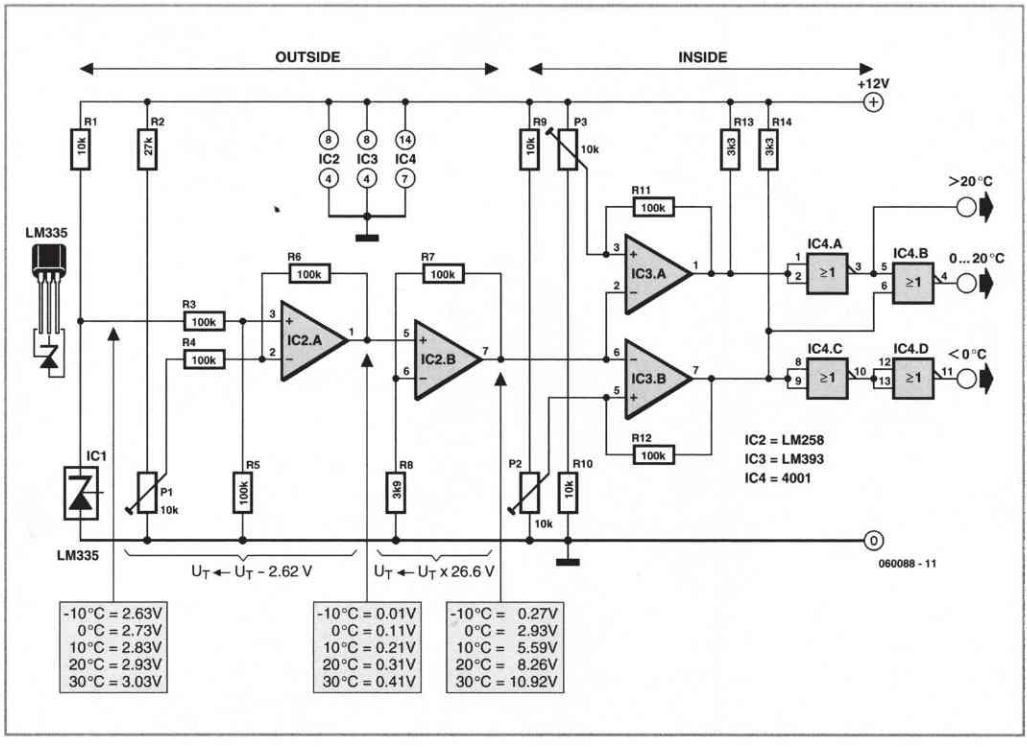

the second case you can open the windows and switch off the heating. You can adjust the switchpoint temperatures to suit your wishes.

The output of the LM335 provides a potential of 10 mV/K. You can obtain the temperature in °C by subtracting 273 from the output value. For example, at an output voltage of 2.98 V the temperature is 25 °C (298 – 273).

In this case, we only need to be able to measure over the range of –5 °C (2.68 V) to +25 °C (2.98 V), which is a span of only 0.3 V. Consequently, we first expand this range using two of the opamps in IC2.

A reference potential of exactly 2.62 V is set using P2. IC2a compares the output voltage of IC1 with the reference potential and passes the difference on to IC2b. The combination of IC2b, R7 and R8 forms a gain block that amplifies this signal by a factor of 27. As a result, the output voltage over the temperature range of approximately –10 °C to +30 °C is mapped into a voltage range of approximately 0 V to +11 V.

Bear in mind that the indicated voltages can vary slightly due to tolerances in the resistor values. Also be sure to use a stabilised 12-V supply, because any fluctuations in the supply voltage will also be amplified by IC2b.

Next, we use two of the comparators in IC3 to determine whether the outside temperature is below freezing or above 20 °C. IC3a and P3 provide the setpoint for around 0 °C, while IC3b and P2 do the same for 20 °C. As it is a bit difficult to precisely set P2 and P3 in practice (you would have to wait until it is 0 °C or 20 °C outside), you can initially set them to the calculated values (2.93 V for P2 and 8.26 V for P3). You can adjust the settings later on if the switchpoints differ too much from the desired temperatures.

Finally, four NOR gates are used to derive three switching signals from the two output signals. These switching signals can be used to drive three LEDs (for example) to indicate which range the temperature lies in. You should preferably use low-current LEDs to avoid overloading the CMOS gates, and connect each of them to ground via a 3.3-kΩ resistor. It's a good idea to place the left part of the circuit (up to and including IC2b, R7 and R8) indoors and the right part outdoors. An interconnecting cable of 10 metres will not present any problems. However, you should connect a 100-µF, 16-V capacitor across the supply voltage on the outdoor circuit board. In principle, you could also use an LM358 in place of the LM258, but its operation is not guaranteed by the manufacture at temperatures below 0 °C.

(060088-1)

037 123 Game — all MCU-free

HOBBY AND MODELLING

Stefan Hoffmann

This electronic game pits a human player against the 'machine'.

The opponents use a common 'game token' and take turns moving along a path by one, two or three steps, and the winner is the first one to reach the goal exactly. Incredibly enough, this simple version of the '123' game can be built without a microcontroller, and it's almost impossible to beat.

The electronics for this is built using only diode logic (**Figure 1**). The 'input interface' consists essentially of 30 miniature sockets to which a probe tip can be connected to mark the position of the 'game token'. To make the game more compact, the sockets are arranged in a grid so the route along the sockets follows a serpentine path (**Figure 2**). The

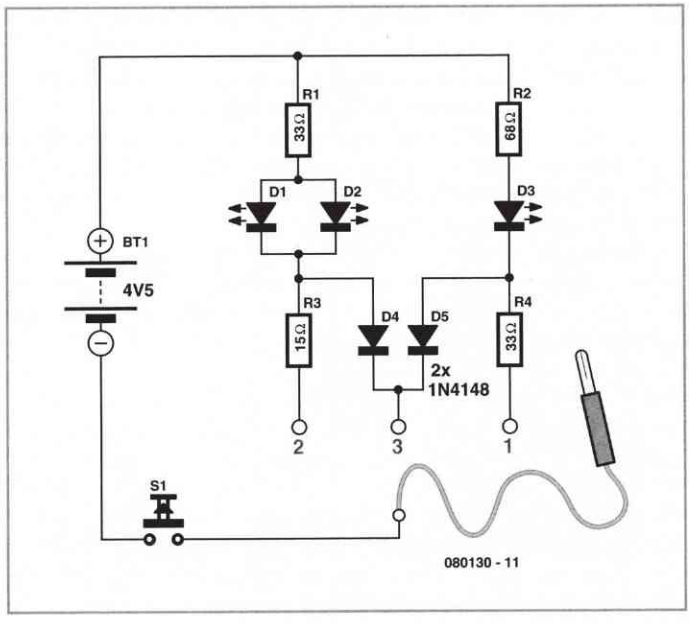

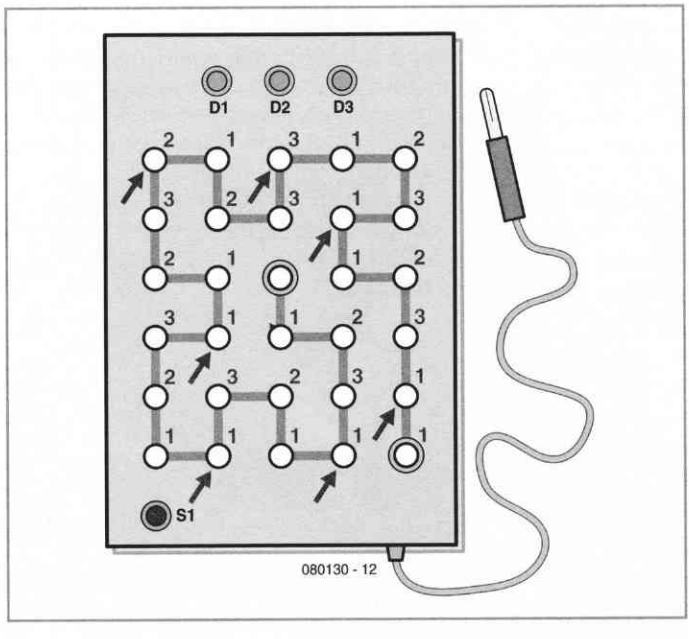

starting position is at the bottom right, and the goal is in the middle of the playing area. The electronics becomes the 'active player' when the button is pressed. The number of steps it wants to move is shown by three LEDs (one, two or three LEDs light up) at the top of the playing area. Naturally, the human player must move the 'game token' for the machine opponent. The winner is the first one to reach the goal exactly.

How can such simple circuitry represent such a formidable opponent? As already mentioned, the path from the start to the goal is formed by 30 sockets. Each socket has an associated ideal next move.
There are three possibilities, of course: 1, 2 or 3. As you can see from the schematic diagram, switch S1 closes the circuit (which means the player asks the 'computer' how many steps it wishes to move) if the probe is touching one of the sockets. All 30 sockets are classified into three types, represented in the schematic diagram by one socket for each type.
All sockets belonging to a particular type are simply connected together electrically, which is not shown on the schematic diagram for the sake of clarity.

This is how the LED display works: the player touches the right-hand contact with R4 (only LED D3 lights up), the left-hand contact with R3 (LEDs D1 and D2 light up), or the middle contact with diodes D4 and D5 (all three LEDs light up). The two diodes prevent all three LEDs from lighting up if the player touches the left-hand or righthand contact.

The key to all this lies in the assignment of the 30 sockets to the three types of logic, which means the three types of ideal next move.

Working backward from the goal, no further move is possible when the goal is reached. For this reason, the last socket is not connected to anything. At the socket just before the goal, the 'computer' naturally wants to be exactly one step in front. Consequently, this socket is connected to R4. At the second socket before the goal, the electronics wants to move by two steps. This socket is thus connected to R3. Obviously, three moves before the finish, a threestep is best as it leads to instant victory. Consequently this socket is connected to D4/D5.

The correct response of the 'computer' is shown in Figure 2 by the number next to each position. As the two opponents take turns playing, the electronics always tries to arrive at a strategically favourable position (marked by the arrows). If the electronics manages to reach one of these positions, it's impossible for the human player to win.

This means that the human player can only win by starting first and always making the right move.

(080130-1)

038 Play the Guitar – Recycle Tip

AUDIO, VIDEO AND PHOTOGRAPHY

Wisse Hettinga

You'll find a pair in every attic, at every jumble sale you will see a few in a box, every hobbyist has at least about four or so among their collection of bits and pieces: old sets of PC speakers! After having served commendably for a few years on either side of the monitor they were disconnected and disappeared into the nooks and crannies mentioned above.

This though, does not need to spell the end for these speaker sets. Anyone who calls themselves a bit of a guitar player will always have a need for a practice amplifier. And especially so if it can work from batteries as well.

The recipe is simple. The little speaker box without the amplifier you still throw away. The speaker with the amplifier can be used as is; connect your guitar with an adapter plug going from jack to mini-jack.

The output of the electric guitar does not match the input of the amplifier very well. But don't panic, a matching network between them, spruce it up a bit with some spray paint (black) and You Play the Guitar!

(080495-I)



039 Optical Pulse Generator

TEST AND MEASUREMENT

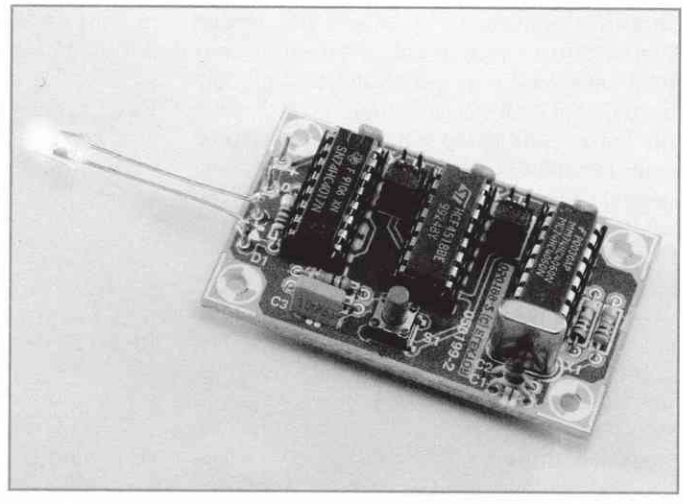

This little aid was originally designed to test the Shutter Time Meter from the January 2006 issue. This meter was specifically designed for 'analogue' SLR cameras.

In order to measure the exposure time of a camera accurately, it will first have to be checked with a well-defined signal first. This circuit was designed for that purpose. But the circuit can also be used if you need a well-defined pulse for some other purpose.

The circuit is build around a trio of standard logic ICs. Firstly a 74HC4060 (IC1) is used to provide a quartz crystal accurate reference for the duration of the pulses. For the crystal frequency we choose the common 4.096 MHz value. To test all the ranges of the shutter time meter, we choose three different pulse lengths in three different decades, namely: 1 / 2 / 4 / 10 / 20 / 40 / 100 / 200 / 400 ms.
With jumper J1 you select a frequency of 1000, 500 or 250 Hz (see table). The frequency is then passed on to J2 and the dual decade counter IC2 (a 4518). This does not need to be a fast HC-type, since the frequency

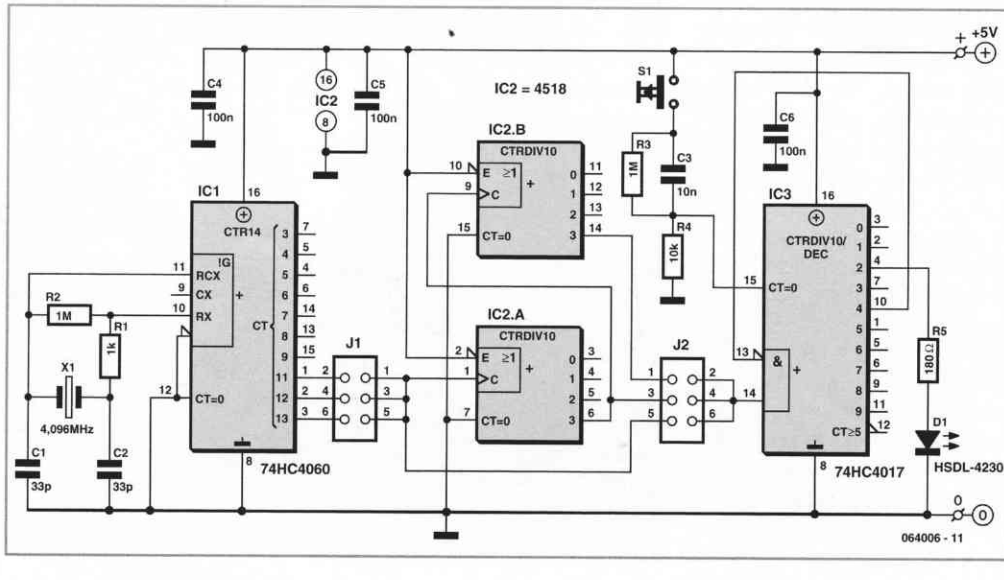

is at most 1 kHz. With J2 the frequency can be reduced by 1, 10 or 100 times. This frequency is then applied to IC3 (a 5-stage Johnson-counter). This has been set up in such a way that in the end there appears only one single pulse at the output. The advantage of the Johnson-counter is that each output is free from glitches and has a duration that is exactly equal to the period of the clock input.

We choose Q2 as the output. Q4 is used to stop the counter. Q0 is only active if we push the reset-button S1. IC3 will then start to count. To ensure that the reset does not affect the duration of the pulse, a differentiating RC-network R4/C3 generates a short reset pulse. R3 ensures that C4 is discharged after releasing S1. Also, just to be sure, we don't use the second counter output but use the third one instead. For the same reason, to stop the counter we use the fifth output. Especially with longer times you will notice that the pulse will arrive at the output a short time after pressing the switch.

R5 drives a current of nearly 20 mA through D1. D1 provides sufficient light for this application to trigger the receiver diode in the shutter time meter. An unusually fast type was selected for the LED, which, with a switching time of 40 ns, has practically no influence on the length of the pulse. If you would like to use another LED then you will have to look closely at the switching time. This needs to be small compared to the duration of the pulse. If you want to use the circuit with a logic level output then you can just omit D1.

COMPONENTS LIST

Resistors
R1 = 1 kΩ
R2, R3 = 1 MΩ
R4 = 10 kΩ
R5 = 180 Ω

Capacitors
C1, C2 = 33 pF
C3 = 10 nF
C4, C5, C6 = 100nF ceramic, lead pitch 5mm

Semiconductors
D1 = HSDL-4230
IC1 = 74HC4060
IC2 = 4518
IC3 = 74HC4017

Miscellaneous
S1 = pushbutton, make contact, 6mm
J1,J2 = 3-way pinheader with jumper
X1 = 4.096MHz quartz crystal
1 wire link
PCB, ref. 064006-1

J1	J2	Pulse (ms)
1–2	5–6	1
3–4	5–6	2
5–6	5–6	4
1–2	3–4	10
3–4	3–4	20
5–6	3–4	40
1–2	1–2	100
3–4	1–2	200
5–6	1–2	400

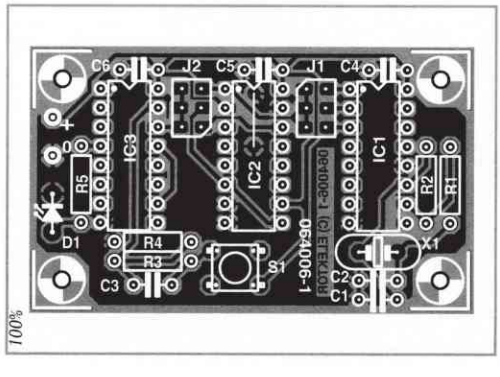

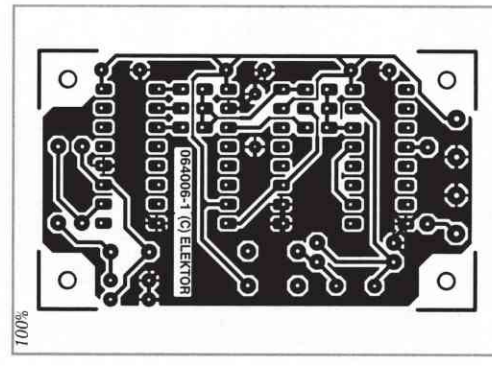

If necessary, the pulse lengths can be changed be selecting another crystal frequency.
The current consumption in the idle state is less than 2 mA. In our prototype, while the circuit is delivering a pulse, the current consumption increases briefly to about 18 mA.
Do not forget the wire link under IC2 when assembling the circuit.

(064006-1)

040 Slug Repellent

HOME AND GARDEN

Uwe Kardel

Anyone who has a vegetable garden knows the problem. As soon as the strawberries start to get some colour, a net needs to be placed over the plants to prevent birds from eating the harvest. But what emerges the next morning? Someone still has had a nibble from the nicest strawberry. The culprit is usually still in the neighbourhood: A large brown slug.

Something should be done about this, any right-minded electronics engineer is never going to admit defeat. Special ridges are available from garden centres to stop slugs and there is also a special ribbon shaped material with wires woven in. The power supply comes from a 9-V battery. A practical experiment indicated that slugs were not the least bothered by these current-carrying wires: they nonchalantly climbed right across the ribbon.

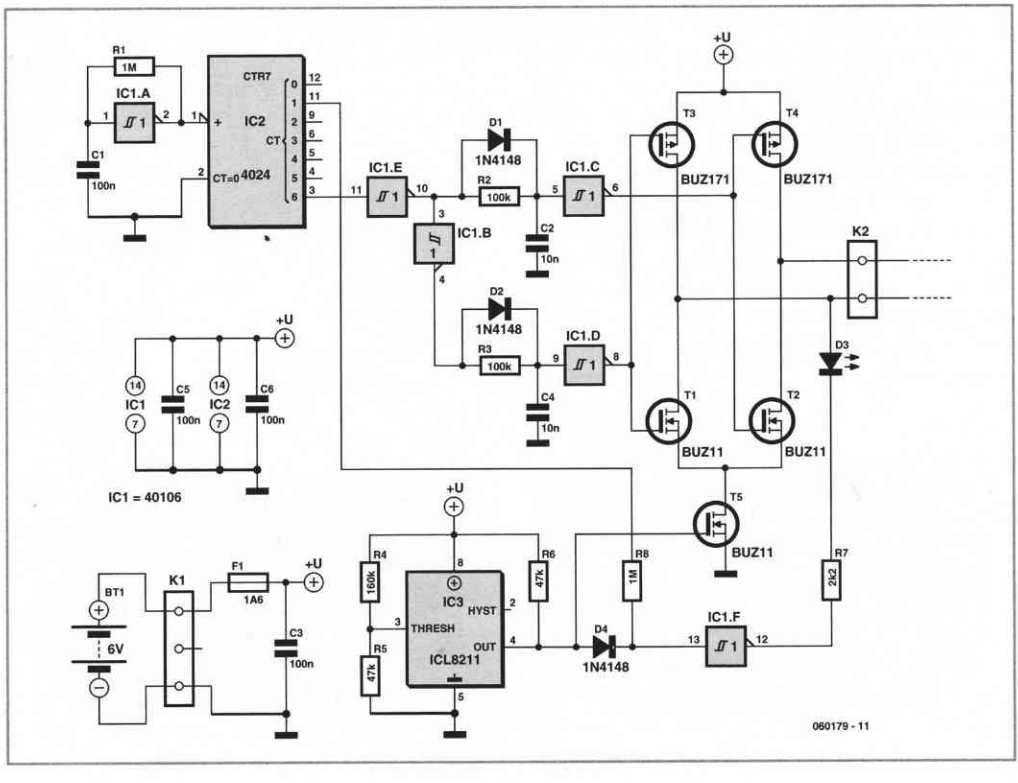

A second experiment was done based on a home-made design: Square pieces of PCB material of 5×5 mm were glued on the four corners of a large printed circuit board. Copper wire with a diameter of 1 mm was soldered on the little squares so that the surface of the PCB was completely enclosed. A voltage of 6 V was applied to the copper wire. This worked much better. Two slugs that acted as guinea pigs stayed the entire night on the PCB. They were, despite the rain, not able to beat the electronic obstacle. Unfortunately, by the morning the copper wire was already badly oxidised.

The search was now on for a practical mechanical construction for this system in the garden. Moreover, AC has to be used for the power supply to limit the corrosion. The first choice was an L-shaped tinplate profile of 12×165 mm. The long side of the metal was pushed deep into the ground to prevent the slugs from crawling underneath. Every 15 cm small pieces of PCB of 10×10 mm were glued on top (250 pieces in total), with the copper wire soldered on top of that. The distance between the tin sheet and the copper wire was about 1.5 mm. The results were excellent: not a single slug dared to cross the barrier. They crawled up to the copper wire and then turned back.

Except, this barrier does not work against flying slugs. Flying slugs? Certainly! These are the slugs that the neighbour finds in his garden and throws across the fence.

After a few months, it was noticed that the battery was exhausted quite quickly and there was also some corrosion. Measurements indicated that during heavy rain the current could increase to about 1 A because of droplets on the copper wire. So, another solution was required. The wires had to be suspended, just like the overhead conductor of a tram.

In the next experiment, a square of 1×1 m was surrounded by a slug barricade where the wire was fastened on the underside of the horizontal piece of tin sheet. Ten slugs were placed inside the square. Nothing happened at first: the slugs sleep during the day. At the fall of dusk they started to move and they appeared to be able to escape the square without effort. They did this by stretching themselves out at a right angle and bypass the copper wire without touching it. This was obviously not a good solution.

Therefore, another, new construction was required.

The solution was found by suspending the wire outside the tin sheet, at a distance of about 5 mm. The slugs are then unable to pass without touching the wire and water droplets hang straight down from the wire where there is no tin sheet. The wires are again soldered to small PCBs, which are screwed to the tin sheet angle profile. For this purpose a hole of 3.2 mm diameter was drilled in the tin sheet every 15 cm. First, the PCBs are screwed to the tin profile, the profile is placed in the garden and bent into the correct shape to enclose the strawberry field. The final step is to attach the wire to the PCBs. During assembly, it is wise to keep a conduction tester at hand and check frequently for short circuits. The smaller the distance between the wire and the tin sheet, the better it works, even against small snails, but as the distance is decreased, the risk of short circuits is increased.

This installation has proved itself in a practical experiment lasting two years. During this time it functioned without problems and keeps slugs out of the vegetable garden.

The AC voltage power supply consists of a clock generator, a driver stage in bridge configuration and an under-voltage detector. The clock generator is formed by R1, C1 and IC1a. No great demands are placed on the clock circuit, except one: Only when the duration of the positive voltage is exactly identical to the duration of the negative voltage is the corrosion of the wires effectively suppressed. That is why IC2 divides the generated frequency by two and in this way guarantees a duty-cycle of exactly 50%.

The buffer stages are built around IC1b, c, d and e and provide for a small delay in the drive signal for the driver stage. This prevents that T1 and T3, and T2 and T4 respectively are driven simultaneously. Otherwise the current consumption of the circuit is too high. The circuit alternately turns on T1 and T2 at the same time, or T3 and T4. In this way, a square wave AC voltage of 12 V_{pp} is generated at the output.

IC3, an ICL8211, provides the under-voltage protection. The LED flashes slowly while the battery is in good condition. When the voltage becomes too low, the LED will flash faster. In addition, transistor T5 will block, so that no voltage is applied to the slug barrier any more. This is only necessary if the circuit is powered from a rechargeable battery. If ordinary batteries are used to power the circuit, T5 can be omitted and replaced with a wire link. With a battery power supply it is also a good idea to connect a switch in series with the LED, which is then only turned on when checking the battery voltage. This improves the life expectancy of the battery. This reduces the current consumption from 1.5 mA to 0.4 mA. During damp weather the current consumption increases considerably.

(060179-1)

041 GPS Receiver

MICROCONTROLLERS

Thierry Duquesne

GPS has many other applications than just satnav in cars and other vehicles. It can also be used, for example, to note the position of a 'secret spot' for finding wild mushrooms out in the woodlands near your holiday chalet in Southern France...

Without seeking to compete with commercial GPS receivers, which employ powerful cartographic software to locate a vehicle or pedestrian in towns, our device quite simply lets us decode the GPS frames transmitted by the satellites and display the decoded latitude and longitude coordinates, which is enough information for finding where you are in the middle of a forest. Besides the cost

Displaying longitude and latitude information

There are three possible formats for displaying longitude and latitude data:

- 'GPS co-ordinates' format (degrees, minutes, and fractions of minutes) e.g.: 36°35.9159
- 'DDMMSS' format (degrees, minutes, seconds) e.g.: 36°35 54.95
- 'decimal' format e.g.: 36.5986°

The author normally uses the 'GPS co-ordinates' format display

Specifications:

- Power supply: 5 V / 115 mA
- Built-in patch antenna
- System status display via red LED (flashing if the module is searching satellites for data acquisition and steady when at least three satellites have been successfully acquired)
- High sensitivity (–152 dBm for tracking, –139 dBm for acquisition)
- Rechargeable back-up battery for memory and real-time clock
- Position accuracy ±5 m and speed accuracy ±0.1 m/s
- Only four pins:
  1 = GND
  2 = +5 V Vcc
  3 = serial communication: TTL, 8 data bits, no parity, 1 stop bit, uninverted (SIO: Serial Input Output) with 4,800 bps transmission
  4 = mode selection (one single data line).

(£ 65 or so) and the weight, the receiver described here is also interesting because of its powering, since it operates from just a simple 9 V battery, unlike commercial receivers that use a special built-in battery that's usually not removable.

Lastly, the system can very easily be incorporated into a mobile object like a robot etc.

Introduction to the GPS system

The Global Positioning System (GPS) is the main current worldwide satellite positioning system and the only one to be fully operational, while waiting for the European Galileo system. Set up by the US Defense Department in the 1960s, the system allows a person equipped with a receiver for the GPS frames to find out their position on the surface of the Earth. The first experimental satellite was launched in 1978, but the constellation of 24 satellites only really became operational in 1995.

Operating principle

The satellites send out electromagnetic waves that travel at the speed of light. Knowing this and the time the wave takes to

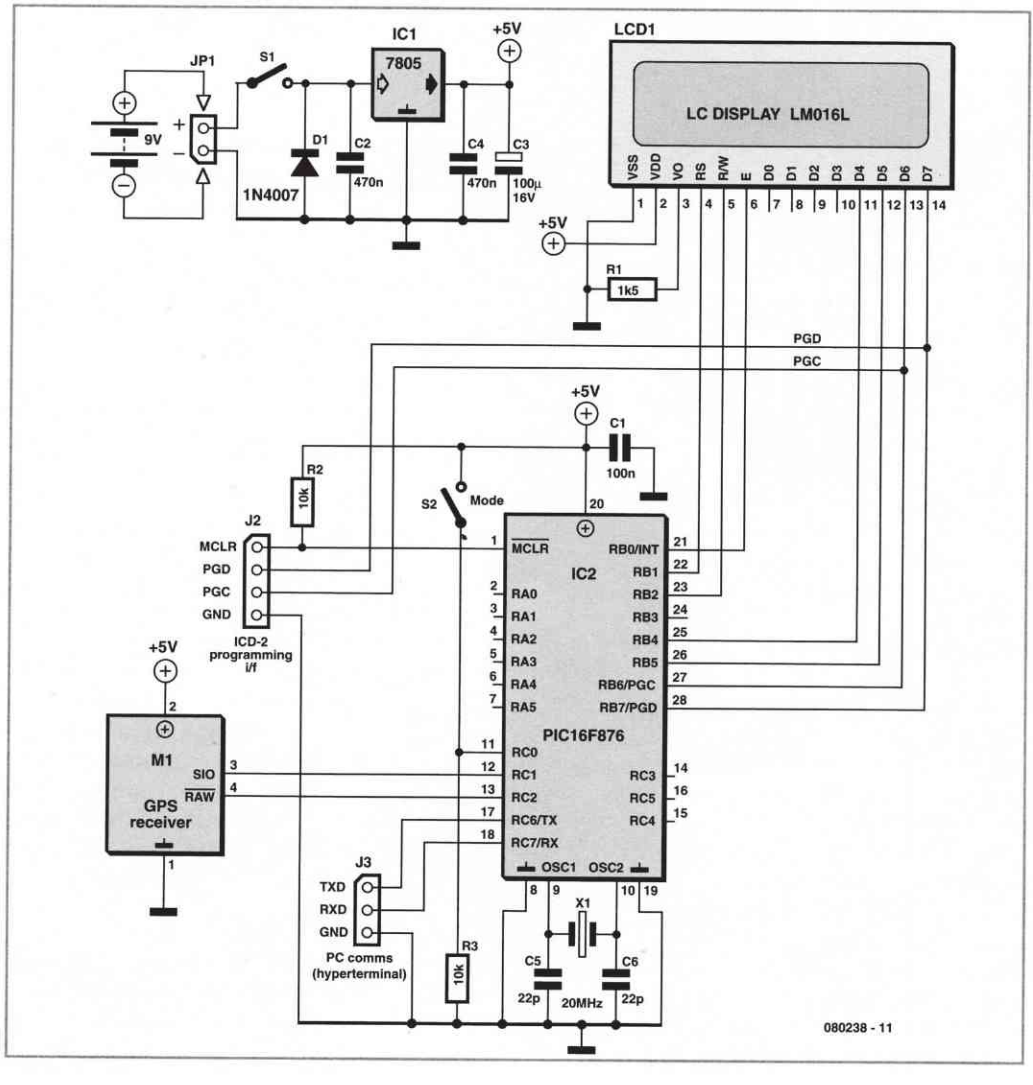

arrive, it is possible to calculate the distance between satellite and receiver. To measure the time taken by the wave to reach it, the GPS receiver compares the transmission time (included in the signal) and reception time of the wave transmitted by the satellite. If the receiver has a clock that is perfectly synchronized with that of the satellites, three satellites are enough to determine the position in three dimensions by triangulation. However, if this is not the case, it takes four satellites to be able to resolve the clock issue and receive the data correctly.

A GPS can operate anywhere, just as long as it has an unobstructed view of the sky, 24 hours a day, 7 days a week. However, it's important to be aware that the position data may be incorrect in the presence of electromagnetic interference.

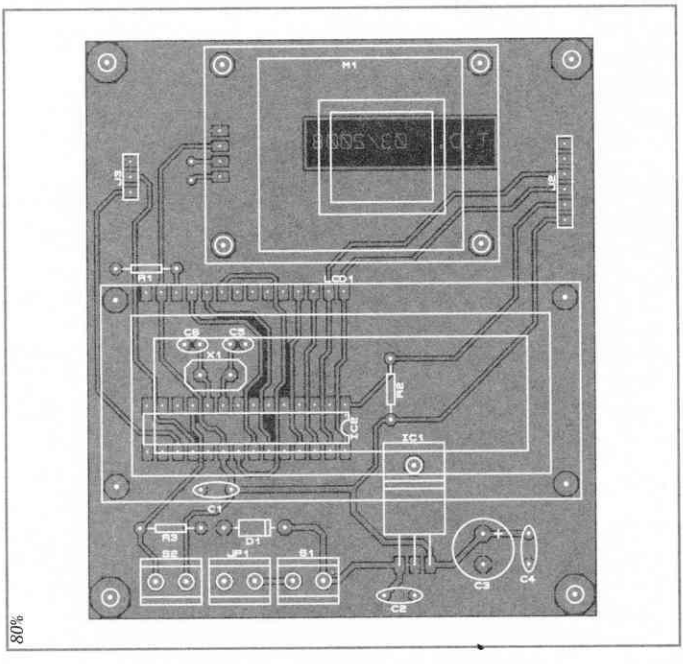

80%

COMPONENTS LIST

Resistors
R1 = 1kΩ5
R2, R3 = 10 kΩ

Capacitors
C1 = 100 nF
C2, C4 = 470 nF
C3 = 100 µF 16V
C5, C6 = 22 pF

Semiconductors
D1 = 1N4007
IC1 = 7805 (TO220 case)
IC2 = PIC16F876A (20 MHz), programmed with hex file from archive 080238-11.zip

Miscellaneous
X1 = 20 MHz quartz crystal (low profile)
JP1,S1,S2= 2-pin connector, 5mm lead pitch
J2 = 6-way SIL pinheader
J3 = 3-way SIL pinheader
K1 = connector for 9V battery
LCD1 = LCD, 2x16 characters, e.g. LM016L or equivalent
M1 = GPS receiver module type 28146 (Parallax Inc.)
PCB, ref. 080238-1 from *www.thepcbshop.com*

NMEA 0183 frames

Most GPS receivers provide data that can be used by other devices. The standard format is NMEA 0183 (National Marine & Electronics Association).

A NMEA 0183 frame is transmitted in the form of ASCII characters, at a rate of 4,800 baud. Each frame is preceded by '$', followed by the two letters 'GP' and three letters to identify the frame (most often GGA). Next come a certain number of comma-separated fields (making it possible to separate the various data).

To end, there is a checksum, preceded by the '*' symbol. This can be used to verify no errors have occurred during the transmission.

One frame consists of a maximum of 82 characters. After that, it moves on to a new frame. Thus any microcontroller with a serial port can extract the data from the GPD module.

At the top of the next page are a few examples of standard frames provided by the GPS module used in this article:

```
$GPGGA,170834,4124.8963,N,08151.6838,W,1,05,1.5,280.2,M,-34.0,M,,*75
$GPGSA,A,3,19,28,14,18,27,22,31,39,,,,,1.7,1.0,1.3*34
$GPGSV,3,2,11,14,25,170,00,16,57,208,39,18,67,296,40,19,40,246,00*74
$GPRMC,220516,A,5133.82,N,00042.24,W,173.8,231.8,130694,004.2,W*70
```

These strings of characters can be exploited to extract the wanted information, including for example the time, date, latitude, longitude, altitude, speed and direction of movement, and even the number of satellites being received or the validity of the received data.
The GPS receiver used is based on the integrated module offered by Parallax Inc. from the USA (or their local distributors).
Its principal characteristics are as follows:

- Reception of up to 12 satellites
- Data updated once per second
- 2 operating modes:
  Smart Mode: when the RAW pin is opencircuit (internally pulled up to logic high), the default 'Smart Mode' is enabled. In this case, the commands for receiving the special GPS data can be executed and the result returned. Each command is represented by one hexadecimal byte. Depending on the command, a certain number of data bytes will be returned. To send a command to the GPS receiver module, the user must first send the header characters '!GPS' (obviously without the quotes) followed by the specific command of their choice (for example, 0x02 to obtain the number of satellites being received) – in this instance, the receiver module would return one byte of data with the number of satellites.
  Raw Mode: When the RAW pin is forced low, the 'RAW Mode' is enabled, the module can then transmit the characters of the standard NMEA 0183 frames (GGA, GSV, GSA, and RMC), making it possible to use the raw GPS frames directly.

Certain devices, like engines, computers, and Wifi links, emit magnetic fields and interference that can prevent the module from receiving the required signals from the satellites and adversely effect its operation and performance. The acquisition time for a minimum of four satellites may take up to five minutes.
In the application described, we're going to be using the GPS module in 'smart mode'.

Electronics

Taking a look at the diagram, we can see that our receiver revolves around a PIC16F876A microcontroller from Microchip Technology. Amongst its other tasks, it takes care of the transcoding and dialogue between the Parallax GPS receiver and the LCD display.
It's worth noting that the circuit has been designed with two operating modes: you can either display just the geographical coordinates of latitude and longitude, or scroll through a whole mass of information (received frame validity, number of satellites received, date, GMT, altitude, latitude, longitude, and so on).

Powering is by way of a simple 9 V dry battery (or rechargeable), which connects to terminal block JP1. The 5 V supply voltage is generated by IC3, a 7805 regulator. Connector J3 allows dialogue with a PC via an RS-232 link (make provision for interfacing with a MAX232), while connector J2 allows programming of the PIC and in-circuit debugging thanks to the ICD2 marketed by Microchip.

The on/off switch S1 connects to the S1 terminal block on the board, the mode selection switch connects to the adjacent S2 terminal block.

PCB

It only takes a few minutes to build this circuit using the circuit board suggested here. The first step consists of soldering the small number of wire links, then the resistors, IC socket, unpolarized capacitors, and then the electrolytic capacitors, taking great care to observe

correct polarity. Check for the presence of power on the correct pins of the IC socket. If everything is OK, next fit the programmed PIC (with the power off) into the socket, and finish by fitting the LCD display and the GPS module. The circuit should then work as soon as power is applied.

Selecting the display mode

By default, at power up the receiver displays the latitude and longitude co-ordinates. If you want to display more information, all you have to do is keep button S2 pressed as you power up the receiver.

(080238-I)

Downloads

The PCB artwork is available for free downloading from our website *www.elektor.com*, archive file 080238-1.zip.
The source code and .hex files for this project are also available from *www.elektor.com*; archive file 080238-11.zip.

Web Links

GPS 28146 manual:
www.parallax.com/Portals/0/Downloads/docs/prod/acc/GPSManualV1.1.pdf
PIC16F87XA data sheet:
ww1.microchip.com/downloads/en/DeviceDoc/39582b.pdf

042 Model Railway Turnout Control

HOBBY AND MODELLING

Hans Zijp

This small circuit can be used to control model railway turnouts operated by AC voltages. A logic level in the range of 5...12 V can be used as the control signal. The coils of the turnout are switched using triacs.

Changes in the logic level of the input signal are passed on by the buffer stage built around T1 and T2. The buffer stage is included to boost the current available at the gates of the triacs. If the input goes high, this positive change is passed through via C1. That causes a positive current to flow through D2 (D2 is reverse biased) to the gate of T3. That triac switches on, and power is applied to the turnout coil.
This situation persists until C1 is fully charged. No more current flows after that, so the triac does not receive any gate current and switches off.

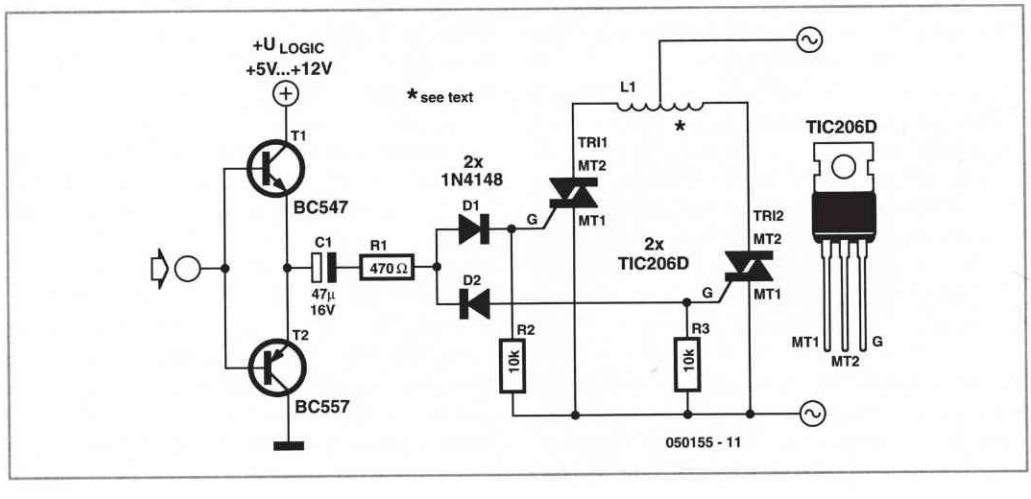

If the input is set low, a negative current flows briefly via C1. It can flow through D2, but not through D1. T4 is switched on now, and the other turnout coil is energised. This circuit takes advantage of the fact that triacs can be triggered by negative as well as positive gate currents.
If the turnout coils are energised for too long, you should reduce the value of C1. If they are not energised long enough, increase the value of C1.

The TIC206D can handle several ampères, so it can easily drive just about any type of turnout coil.

You can also use a different type of triac if you wish. However, bear in mind that the TIC206 requires only 5 mA of gate current, while most triacs want 50 mA. That will cause the switching times to become quite short, so it may be necessary to reduce the value of R1.

(050155-1)

043 Automatic Car Battery Charger

POWER SUPPLIES, BATTERIES AND CHARGERS

C. Tavernier

A Summer Circuits edition on 'all things outdoors' – good, but what of all the battery-powered circuits that remains indoors? Once the fine weather starts, the family car tends to remain increasingly in the garage – which is as beneficial to the owner, his/her bank account and the air that we breathe as it helps – to an extent to – reduce CO2 emissions. However, when we come to want to use the trusty vehicle again, it often happens that the battery shows serious, deeply worrying signs of being flat, sometimes to the point of preventing the engine from starting altogether. Pushstarting is no longer recommended or even possible with modern cars, so a topped up battery is highly appreciated.
The solution of leaving an off-the-shelf charger permanently connected is not generally satisfactory, unless you're lucky enough to have an 'electronic' one. The majority of dirt cheap ordinary chargers don't include any regulation circuitry and so will overcharge a vehicle battery if you're unwise enough to leave it permanently connected.

So our proposed project is to build a charger that can act as both a standard charger, and a float charger that you can leave permanently connected without the slightest risk to your battery or fear of over-charging. What's more, it doesn't use any 'exotic' components and is ridiculously cheap.

Let's have a look at the circuit diagram. The voltage supplied by our charger's transformer is rectified by diodes D1 and D2 but is not smoothed. Strange as it may seem, this is vital for it to work properly, because as a result the rectified voltage consists of a succession of sinewave half-cycles, and hence falls to zero 100 times per second.

When thyristor THY2 is conducting, the battery is effectively charged, the charging current being limited only by resistor R6, which has to be calculated as shown below. This thyristor is triggered via resistor R4 for each half-cycle of the mains, except when thyristor THY1 is itself triggered. In that event, THY2 turns off the first time its supply voltage drops to zero, and no further current can reach the battery.

The voltage at the battery terminals is sampled by R5 and smoothed by C1 before turning on THY1 or not via P1 and D3. As long as this voltage is lower than a certain threshold, determined by the setting of P1 and corresponding to a battery that is not yet fully charged, THY1 is not triggered and so leaves THY2 conducting for all the mains half-cycles. When the voltage at the battery terminals is

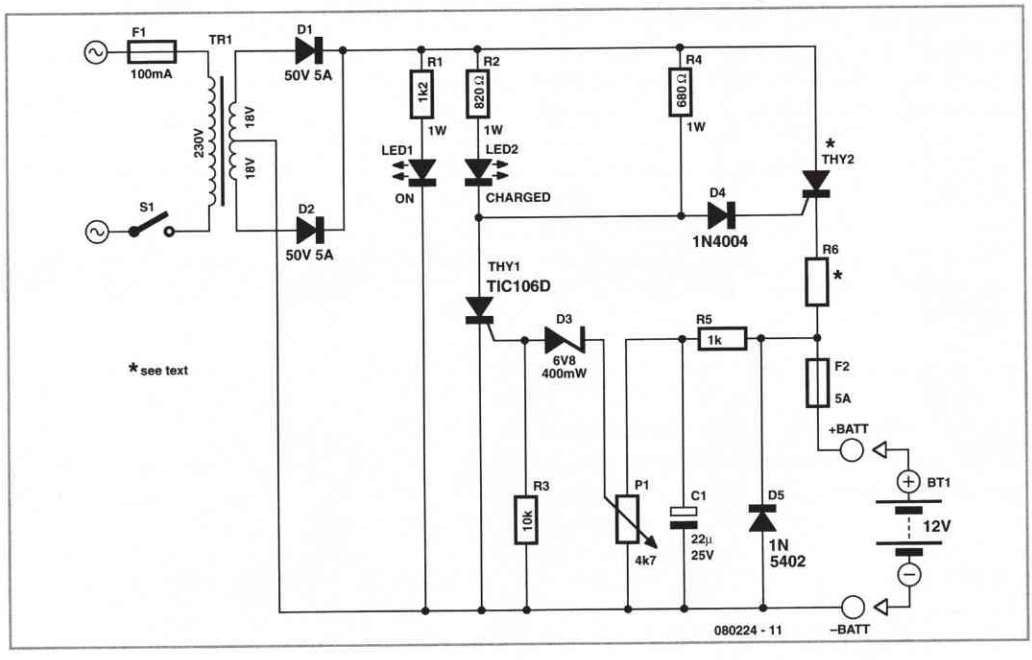

high enough, THY1 is triggered and thus prevents THY2 from being triggered. This phenomenon is not in fact quite as clear-cut as we have just described, but takes place very progressively, so as it approaches full charge, the battery's average charging current gradually reduces automatically, eventually stopping completely once the fullycharged voltage has been reached.
LED1 acts as a charging indicator, while LED2 lights more when THY1 is being triggered frequently, thereby acting as a fully charged indicator.

Three components of the circuit proposed here need to be selected according to the characteristics you want your charger to have; these are R6, THY2, and TR1. R6 needs to be calculated according to the maximum charging current you want, from: R6 = 16 / I where I is the current expressed in amps. Warning! Given the value of the other elements in the circuit (D1, D2, TR1, and the fuse), do not exceed 5 A. The power dissipated in R6 can be calculated from

$$P_{R6} = \frac{36}{R6}$$

with P expressed in watts and R6 in ohms, of course.

Thyristor THY2 should be a 100-V type (or more) rated at 1.5 to 2 times the desired maximum charging current.
And lastly the transformer, which should have a power in VA given by:

$$P = 18 \cdot 1.2 \cdot I$$

where I is the maximum desired charging current, expressed in amps.

The only adjustment to be made concerns pot P1 and will require access to a wellcharged battery. Connect it to the charger output and replace the 5-A fuse with an ammeter – preferably an old analogue type, better able to respond to average currents than certain modern digital types. Then adjust potentiometer P1 to obtain a current of around 100 mA. Later on, when you have the opportunity to charge a very flat battery, you will be able to fine-tune this adjustment by tweaking P1 to obtain a charging current close to the maximum you have set by means of R6. You'll need to find a compromise setting between the

float charging current, which mustn't exceed around 100 mA, and this maximum current. Whatever the accuracy of your adjustment, you can be reassured that your battery will be treated better by this project than by many of its non-electronic counterparts to be found in the shops.

(www.tavernier-c.com) (080224-I)

044 SCSI Adapter

COMPUTERS AND INTERNET

Ton Giesberts

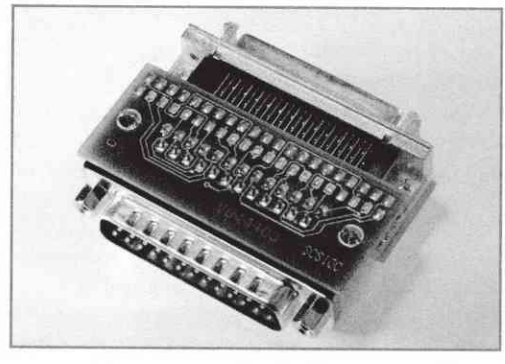

This circuit (admittedly a big word for three connectors), was born out of necessity. Many years ago, when reliable scanners were still being made, there were faster and more expensive models with a SCSI interface. In many cases, as part of the package, a proprietary SCSI controller for the PC was delivered with it. This was typically an ISA bus controller. When upgrading to another SCSI controller (PCIbus), and also motivated by being able to connect better hard disks and other peripherals, a new cable was required to connect the high-density connector of the new controller to the older 25-way sub-D or 50-way Centronics connector.

In these days of SATA2 and FireWire, the use of SCSI as a fast interface to devices is no longer required, unless you happen to have, for example, a very good quality scanner with

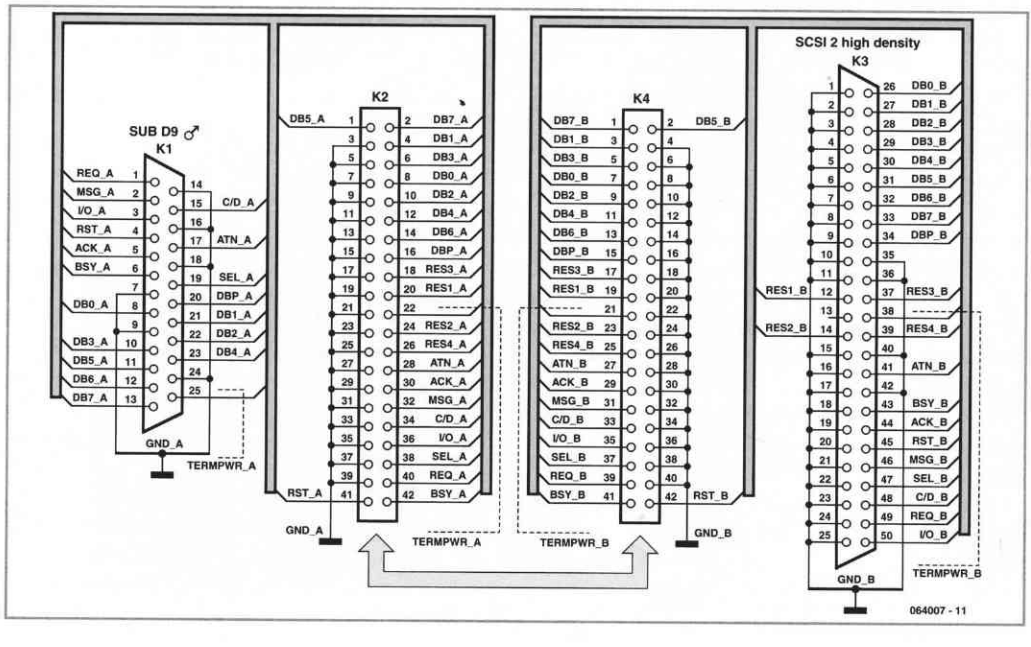

COMPONENTS LIST

K1 = 25-way sub-D plug (male), angled pins, PCB mount
K2,K4 = 2x21-pins pinheader (see text)
K3 = 50-way angled SCSI-2 highdensity connector, PCB mount (e.g. Farnell # 369-3752 or # 854-037)
PCB, ref. 064007-1

SCSI interface. There are converters that can connect a SCSI device to the USB-bus. These have a male high-density connector for the SCSI interface, while the controllers internal to the PC have a female connector. The new cable that you bought cannot be used and you will have to look for another solution. One of these is to make an adaptor, which allows the USB/SCSI converter to be connected directly to the scanner. For the scanner we assumed a 25-way sub-D and for the converter a high-density connector. The schematic shows the necessary connections and their names. We don't discuss this any further, there is plenty of information available on the Internet.

The PCB consists of two parts. One is for fitting the right-angle 25-way male sub-D connector and the other for the high-density connector. The PCB has been designed in such a way that the two component sides can be connected together via a double row pin header (2×21 pins). By selecting the spacing between the boards just right, so that the height of the connectors is about the same, a robust and compact adapter can be made. The photo shows what the intention is. There is really no opportunity for mistakes. K2 is also K4 and there is therefore only one pin header required. You may have to take into account the locking screws of the male sub-D connector. These are probably already present on the scanner and you will have to remove them from the adapter. The adapter is held in place firm enough without the locking screws.

Unfortunately it turned out that the software for the scanner could not cope with the USB driver for the converter, but that is another story.

(064007-1)

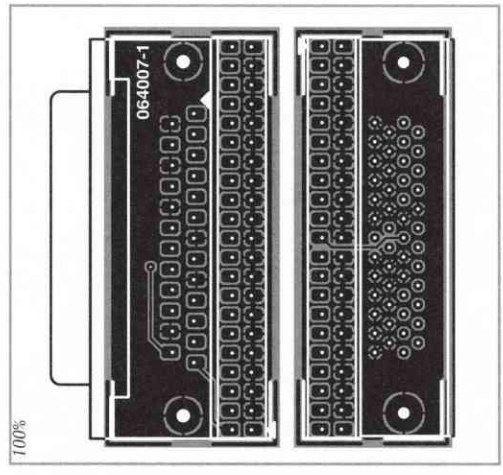

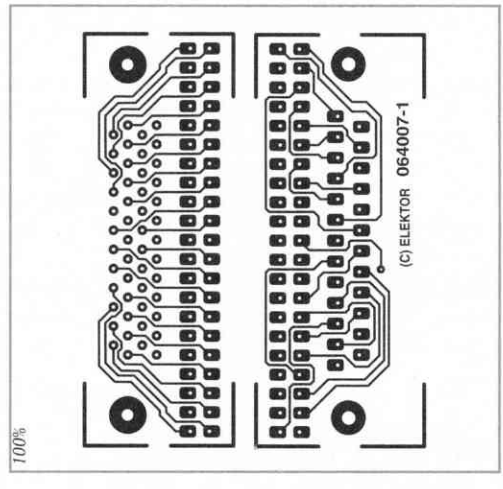

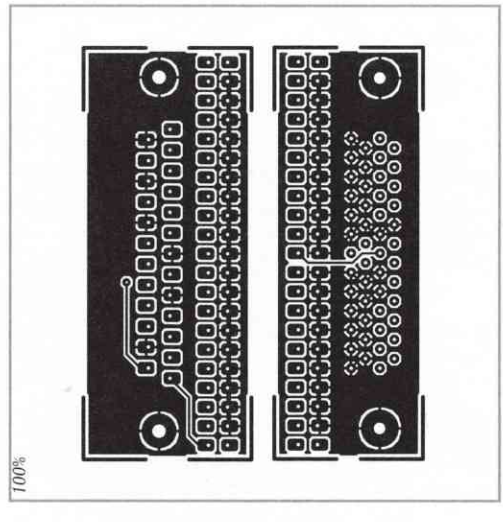

045 LED Tester

TEST AND MEASUREMENT

Henry Schouwstra

This simple LED tester consists of a current source with a potentiometer that can be used to adjust the current. The current source is implemented using a type TL081 opamp.
The output current of the opamp flows through the diode and R2. The voltage drop across R2 is fed back to the inverting input and compared with the reference voltage, which is set with R1 and applied to the non-inverting input. The adjustment range is approximately 0–30 mA, which is suitable for testing all normal LEDs. If you wish, you can connect a multimeter across the LED to measure the voltage on the LED.

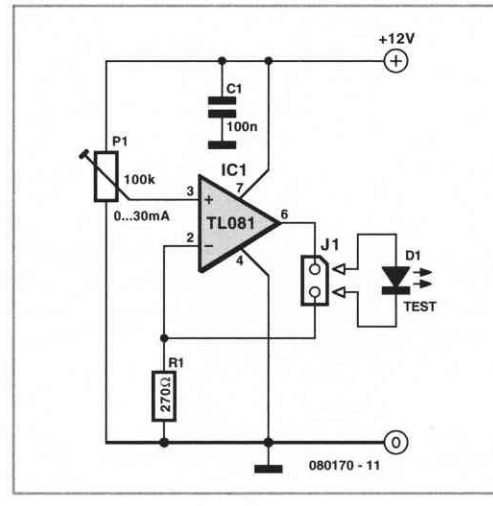

For the power source, a good option is to use a small laboratory power supply with the output voltage set to 5 V.
It is convenient to fit the potentiometer with a scale so you can see directly how much current is flowing through the LED. In order to calibrate the scale, you can temporarily connect an ammeter in place of the LED.

(080170-1)

046 Serial to Bluetooth

COMPUTERS AND INTERNET

Richard Hoptroff

When computer makers switched from RS232 to USB, one of the collateral benefits was TTL compatibility with regard to the supply voltage as well as signal levels. Unfortunately, there was also collateral damage, primarily in the form of an enormous increase in the complexity of the data transmission process.
All you need for connection to an RS232 serial port is a level converter, but USB requires an extra IC (such as the Cypress CY7C68000 or a special-purpose microcontroller, such as the PIC18F4550) to make data transmission possible. That sounds like a zero-sum game,

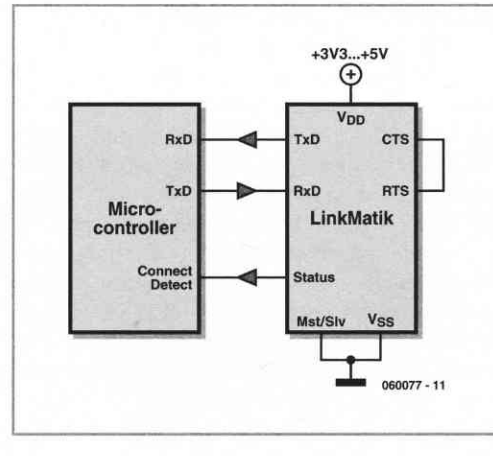

which raises the question: if you already have to use an extra IC, why not go directly to Bluetooth?
And in fact, there are already several Bluetooth modules available, complete with an integrated antenna and simple serial inputs and outputs. However, many of them have the disadvantage that they are controlled using AT commands, which makes it necessary to use an additional controller.
However, there are also autonomous models available, such as the new LinkMatik module (*www.flexipanel.com*). If its Mst/Slv pin is held low, it waits until something wants to connect to it. If the pin is high, the module actively searches for devices that are ready to establish a connection. That means you can set up a shortrange radio link without using a computer by simply coupling two modules together.

However, generally speaking you will probably want to control an external device from a PC. In that case, you can let your PC search for devices that are ready to establish a connection. When the PC finds a module, it lists its available services. The service known as 'Serial Port Profile' (SPP) is the appropriate service of the LinkMatik module. If the security function is enabled, you will have to enter the PIN code of the module (set to '0000' when first delivered). Once a connection has been established, the Status pin of the module goes to a high level to indicate that it is ready for bidirectional data transmission.
Now you can simply use the familiar TxD and RxD lines to transmit serial data. The RTS and CTS lines are also available for controlling the data flow. If you do not need that function, you can simply connect these two lines together. However, this wireless serial interface does not allow you to use these lines for purposes other than their intended use, as is often done with 'normal' serial interfaces.
As the data is buffered in the module before and after wireless transmission, RTS and CTS are generated locally. These two signals only control data flow to or from the module, but not over the wireless link.
It is generally not possible to have more than one serial link via Bluetooth per PC. However, Bluetooth-2.0 compatible modules have recently become available, and they allow up to four serial links to be used concurrently along with other functions.

(060077-1)

047 Indicator for Weller Soldering Stations

MISCELLANEOUS ELECTRONICS AND DESIGN IDEAS

Heinz Kutzer

Many of the soldering stations produced by Weller/Cooper Tools Group use the 'Magnastat' principle to control the bit temperature. The interchangeable bits are fitted with a magnetic cap which pulls on a contact in the iron and completes a circuit to switch power to the heating element. When the magnet in the tip reaches a predefined temperature (the so-called 'Curie temperature') it loses its magnetism and releases the switch contact. The process is reversible so that the contact is remade as the temperature falls. The number on the cap identifies its operating temperature: 5 = 260 °C, 6 = 310 °C, 7 = 370 °C and 8 = 425 °C. When used with lead based solders a 370 °C bit is the usual choice. The heating element is switched on when the tip is below this temperature and off when it is above it, keeping the tip temperature constant.
The circuit suggested here is an add-on indicator lamp to show when the soldering tip is up to temperature. The circuit described here is intended to be installed in the housing which forms the base of the soldering iron. An LED fitted to the front panel indicates when the iron is heating. The circuit works by measuring the voltage difference dropped across a shunt resistor fitted in series with the

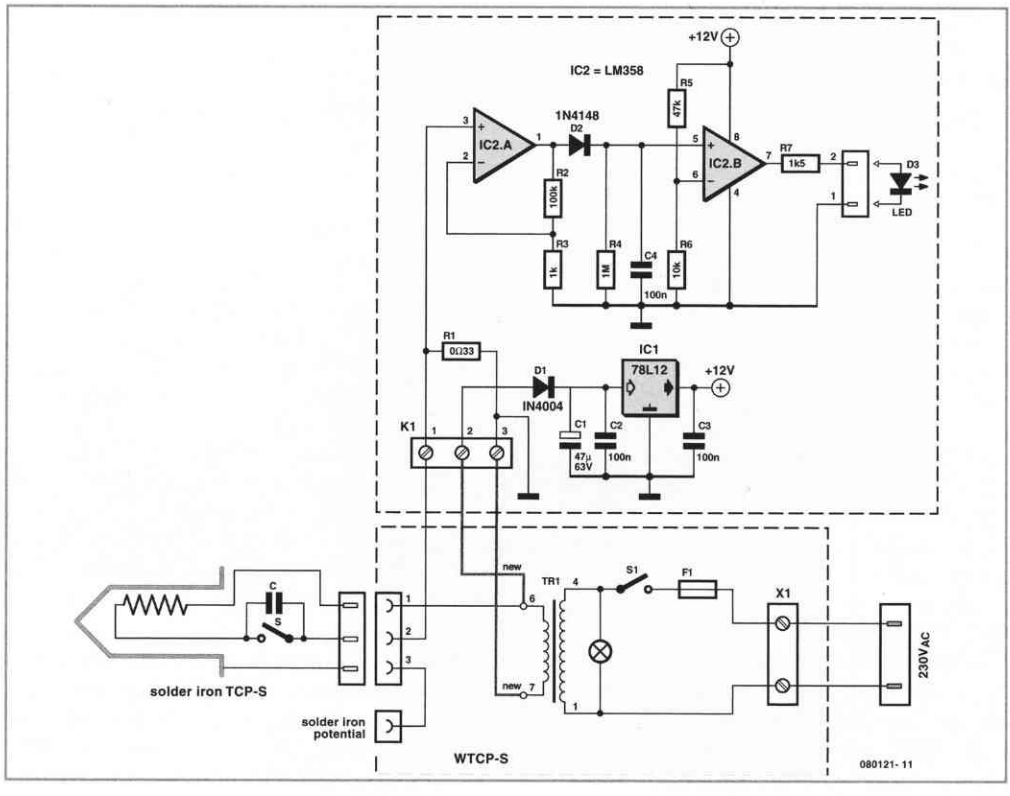

heating element in the iron. It is not necessary to carry out any calibration on the circuit. This design can be fitted to the WTCP-S, WTCP 50 and WTCP 51 soldering iron stations from Weller.

The add-on indicator circuit can be seen in the uppermost dashed box of the circuit diagram, the lower box represents the internals of the soldering iron station. A transformer in the base supplies 24 V to the heating element in the iron and is connected via a cable and three pin plug/socket on the base unit. The heating element has an impedance of 12 Ω which produces an average current of 2 A and a peak value of 2.822 A. Using a 33 mΩ resistor for the shunt (R1) gives a voltage drop of 93 mV (peak) when the element is heating.

IC2 is a LM358 type dual operational amplifier. The amplifiers are powered from a single-ended power supply and IC2.A is configured as an amplifier with a gain of 100. It amplifies the positive half waves of the voltage dropped across the shunt R1. The resulting output signal charges up capacitor C4 to approximately 10 V via diode D1 when the element is on. IC2.B is configured as a comparator and resistors R5 and R6 set the reference voltage to around 2.1 V. When the element is heating the comparator output is positive and the LED lights. As the operating temperature is reached the magnetic switch opens and the voltage across C4 is discharged through R4 (time constant = 100 ms) and the LED turns off.

Power for the circuit is derived from the 24 V transformer in the solder station. Diode D1 performs half wave rectification and C1 is a reservoir capacitor to produce a DC voltage for the 12 V voltage regulator (IC1).

The maximum offset voltage for the LM358 is only 7 mV, with a gain of 100 this can produce an output offset of 0.7 V which is well below the 2.1 V comparator threshold and is not likely to be a problem so it is not necessary to fit any form of offset adjustment.

(080121-I)

048 BBC Radio-MP3 for Seniors

Richard Salisbury

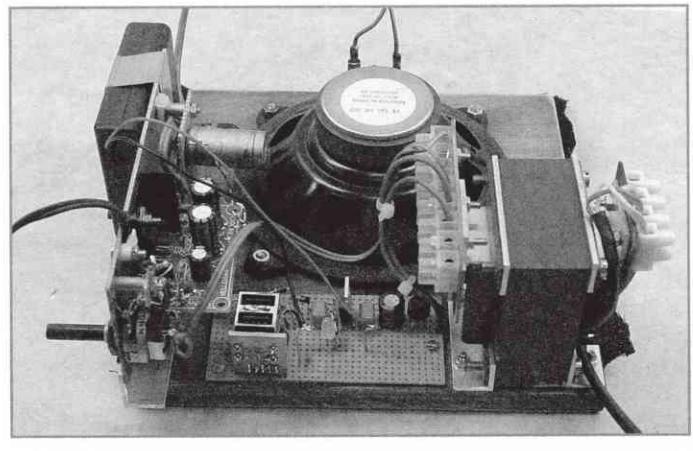

Just recently the author had cause to make an MP3 player for a 93-year old recently moved to a nursing home. There, radio reception turned out to be hopeless, mainly owing to interference from TL lamps. The elderly person involved can neither see well nor has good manipulative skills (arthritis), while learning new procedures is sure to present problems.

The solution to the radio reception problems was to build an iRiver U10 MP3 player into a speaker box which looks like an old fashioned radio and has only an ON/OFF button and volume control.

The unit is powered by the normal mains and can remain unplugged for about ten hours before it stops. Remarkably, that also happens on being replugged into the mains. Due to a firmware problem of the U10, on 5 volts ap-

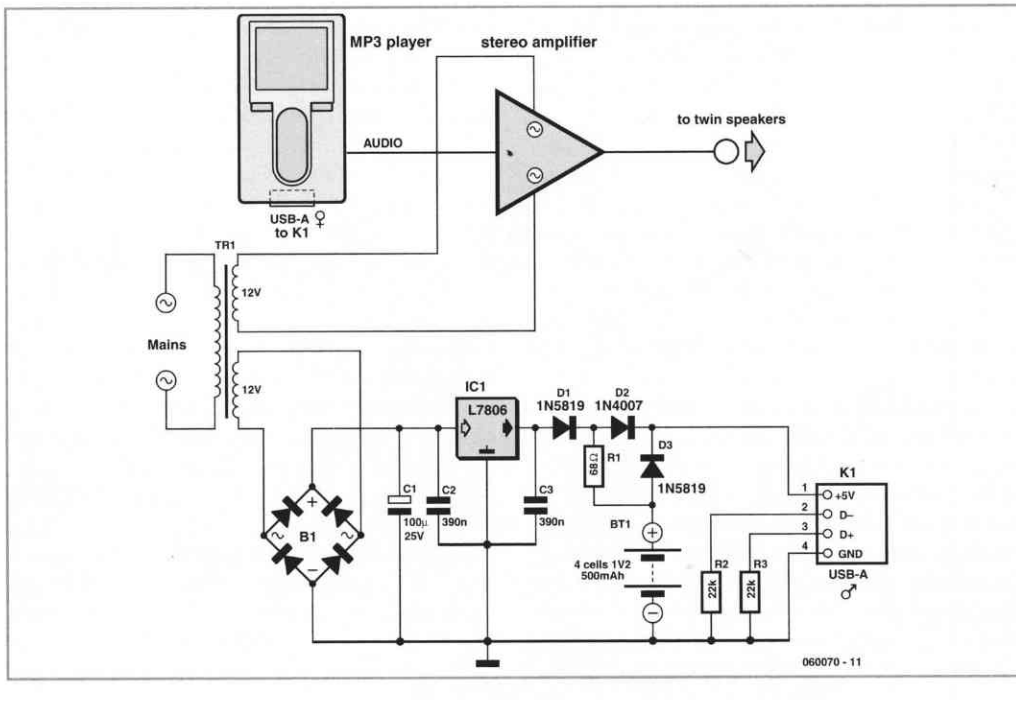

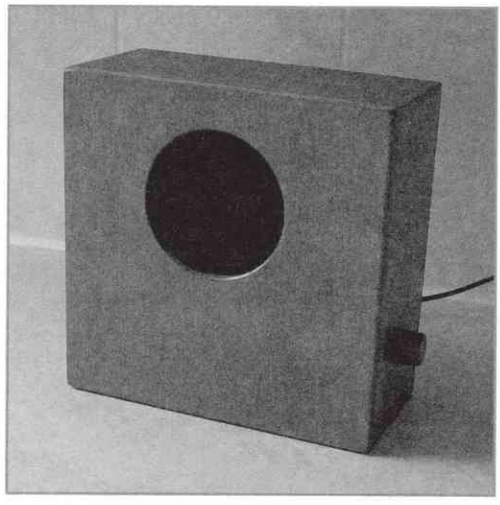

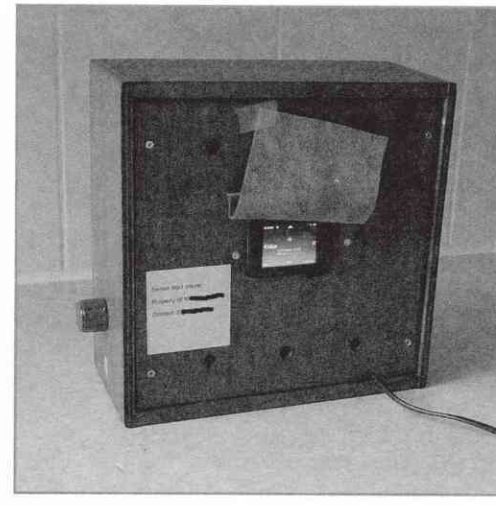

pearing on the USB connector it assumes it is connected to a computer and stops playing. The circuit diagram is all straightforward and speaks for itself. The U10 is fixed in a window on the back of the player with the keys locked. Hence, it plays continuously whether the amplifier is on or not (the author used a 15-pound speaker set/amplifier for a computer which switches the 12 volts AC). The transformer was replaced with a double secondary winding to avoid any earthing problems between the USB charging device and the amplifier ground.

The unit is working well and plays the client's favourite music for about 4-3/4 hours, more or less like a personal radio station. Of course, much more music could be loaded on the player since stereo makes no sense and it could be encoded at a slower rate.

An initial problem of the MP3 player's output level not being well matched to the amp input was solved by choosing another amplifier (Velleman K4001) which has a more suitable input sensitivity of 40mV.

(060070-1)

049 FM Microbug

RF (RADIO)

Thijs Beckers

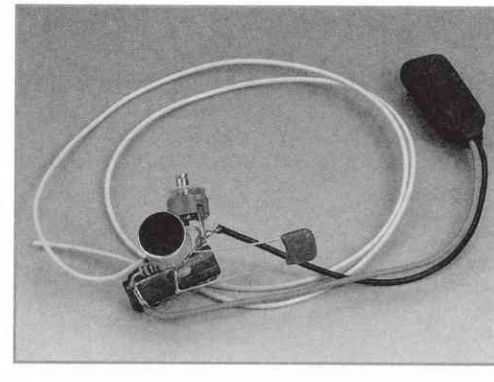

Although the idea has been around for a good while already, it's still cute: a tiny circuit that you can hide just about anywhere for all sorts of eavesdropping activities. Fun for at work, but also usable as a babyphone. The basic necessities are a small microphone and a little transmitter. This can be realised using very simple resources.
This bug circuit operates in the normal VHF FM band and can thus be received using any

ordinary radio. The schematic is based on a somewhat uncommon IC, the 74LS13, but with a bit of searching you can still manage to find one somewhere. The other five components (that's all!) are all readily available. You might already have them in your parts drawer.

Here we use an electret capsule for the microphone. The necessary bias voltage is tapped off from the supply voltage via R1. If you use a crystal microphone instead, you can omit R1 and C3.

The microphone signal is fed to pin 5 of the IC. C2 is included to slightly improve the performance and sensitivity of the circuit. C1 serves to decouple the supply voltage so any spikes that may be present are suppressed. Just about any short length of wire makes a suitable antenna.

The circuit operates on the third harmonic at around 100 MHz. It takes a bit of experimenting to find the right frequency on the radio, but within a range of a few metres the circuit can even overpower signals from relatively powerful transmitters. Of course, this circuit is not entirely legal, so you shouldn't try to boost the power too much. A range of 20 metres is certainly possible with the circuit as shown.

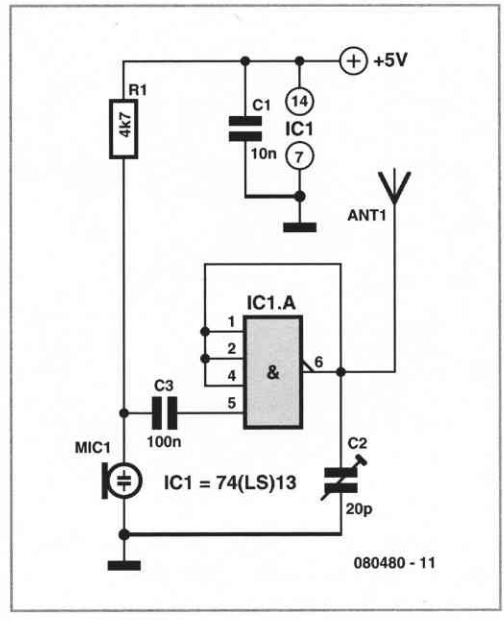

This very simple circuit is highly sensitive and somewhat prone to positive feedback, especially if you hold it in your hand. The best approach is to put it down somewhere and stay away from it; then it works fine. If you want to experiment with the circuit, feel free!

(080480-1)

050 Alternative Halogen Supply

HOME AND GARDEN

Stijn Coenen

Readers who do not care to modify the power supply of an old PC into a suitable halogen power source (see Elektor April 2006), may find the present design a welcome alternative.

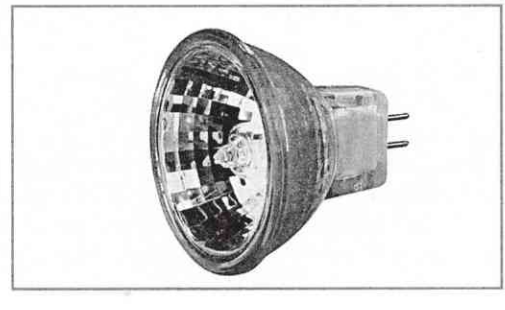

The circuit does not need any changes to the power supply. It allows the halogen lamps to be initially powered from the 5-V rail of the supply via RE2, so that they are preheated. Subsequently, they are powered from the 12-V rail via RE1, while at the same time the 5-V rail is disconnected. This ensures that the current surge through the lamps is so small that the protection in the power supply does not react.

Operation of the circuit is as follows. As soon as the PC supply provides power, IC1.B drives T1 into conduction and RE2 closes. The potential at the non-inverting input of IC1.B is 6 V, while that at the inverting input rises from 0 V. Lamp LA1 is then connected to the 5-V rail.

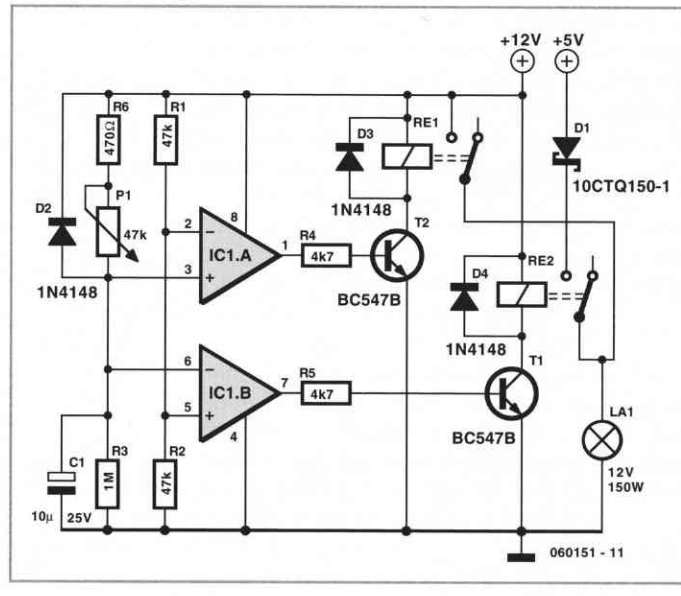

After a short span of time, the voltage across C1 has risen to a value where IC1.B changes over, whereupon T1 is cut off. At the same time, IC1.A drives T2 into conduction. The circuit is then decoupled from the 5-V rail and connected to the 12-V terminal. The 5-V rail in the PC power supply is protected against spikes on the 12-V line by D1.

Diode D2 protects IC1 against over-voltage on its inputs should the 12-V rail fail. Resistors R4 and R5 limit the base currents of the transistors. D3 and D4 are quenching diodes.

The time during which lamp LA1 is powered by 5 V is preset with potentiometer P1. The maximum time span is about 0.33 s and the minimum 3.3 ms. The latter is perhaps rather short, but it also depends to some extent on the type of power supply used. Some experimentation may be worthwhile!

(060151-1)

051 Bell Alarm

HOME AND GARDEN

Patric 't Kindt

If you use a lamp with a motion sensor for outdoor lighting, the original electrical switch is actually no longer necessary. If you replace the switch with the circuit described here, an acoustical signal will be generated each time the outdoor lamp is switched on. It's thus somewhere between an alarm and a doorbell.

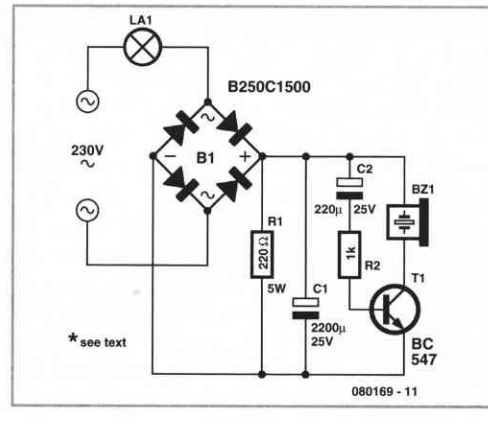

The operating principle is simple. A circuit that causes a voltage drop of only a couple of volts is connected in series with the lamp. As

the circuit needs a DC voltage, the current for the lamp is passed through a bridge rectifier. The voltage drop across the circuit is determined by R1. The function of C1 is to smooth the raw DC voltage. Note that this is not an example of peak rectification, but instead of averaging. For this reason, the voltage on C1 is lower than you might expect. Ultimately, the DC voltage on C1 reaches the same value as the average voltage across R1.

For example, consider what happens with a 100-W lamp. For convenience, we can assume that the lamp has a resistance of 529 Ω. If we ignore the voltage across the diodes and the voltage across R1, the current is approximately 0.39 A on average (not 0.43 A). This is because the average mains voltage is only

$$\frac{230\ \text{V} \cdot \sqrt{2}}{\pi/2} = 207\ \text{V}$$

This yields a voltage of approximately 8.5 V on C1. As the buzzer and T1 only draw a few milliampères from C1, in practice the voltage will differ from this value by at most a few tenths of a volt.

Here you should use a DC buzzer with a large operating voltage range. A good example is the CEP-2260A, which has a voltage range of 3–20 V (available from Digi-Key and other online sources).

The charging time of C2 determines how long the buzzer remains energised, and here it will be a few tenths of a second. Depending on how much current the buzzer draws, you can increase the value of R2 in order to extend the time (this is certainly necessary with the above-mentioned buzzer type).
Depending on the lamp power, you can consider adjusting the value of R1. This will certainly be necessary if you use a 150-W lamp or larger. In this case, cut the value of R1 in half, primarily because the power dissipation will otherwise be too large. In the example described here, it is around 3 watts.
The bridge rectifier also deserves special attention. A large current can flow briefly when the lamp is switched on 'cold'. A 250- V, 1.5-A bridge rectifier is adequate for a 100-W lamp, but heavier-duty diodes are necessary with higher lamp power – such as the 1N5408 (1000 V / 3 A).

Due to the heat generated by R1, make sure that R1 is located a certain distance away from the other components in the assembled circuit. Also bear in mind that the entire circuit is connected to mains potential. Never make any adjustments while the circuit is connected to the mains! It's thus a good idea to test the circuit before fitting it into the switch box.

(080169-1)

052 Speed Pulse Generator for PC Fans

COMPUTERS AND INTERNET

Stefan Schwarck

This circuit generates speed pulses from the speed-dependent voltage spikes generated by commonly used types of PC power supply fans, which are superimposed on the supply voltage. The pulse signal can be used by the motherboard to monitor the speed of the fan.

For this purpose, the pulses are tapped off from a fan connected to K1 via capacitor C1 and amplified by opamp IC1a (one half of a TL082 dual opamp). The second opamp in the Tl082 (IC1b) transforms the resulting signal into a clean rectangular clock signal and passes it to a binary counter circuit in the form of IC2a (4520), which reduces the frequency by a factor of 2.
A BC547C transistor (T1) connected to the counter output provides an open-collector output at K2 for connection to the motherboard.

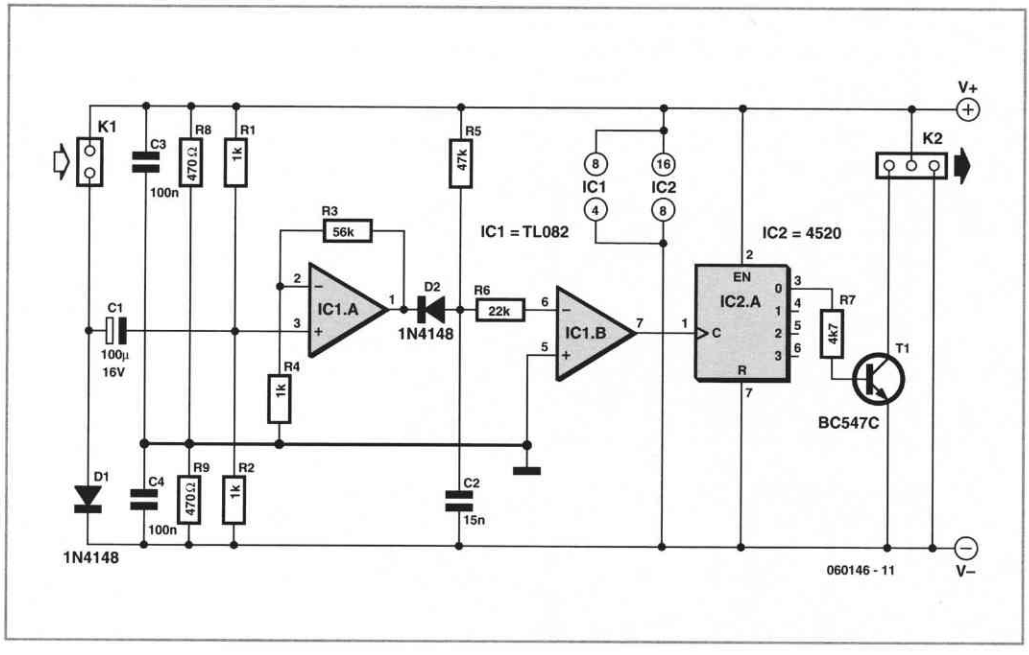

K2 can be connected directly to a fan connector on the motherboard. The 12-V supply voltage for the circuit is also taken from the motherboard via this connector.

Components C3, C4, R8 and R9 create an artificial ground potential at half the supply voltage (6 V), which serves as a reference voltage for the opamp. Diode D1 should have the lowest possible voltage drop to minimise the voltage loss to the fan.

The circuit is suitable for use with CPU fans and fans for graphics cards in addition to power-supply fans.

(060146-1)

053 Pseudo-random Glitter

HOBBY AND MODELLING

Hans-Jürgen Zons

A question recently asked on the Elektor website forum was how to make several white LEDs 'sparkle'. The helpful author has not only provided a useful suggestion (use a random effect), but also developed a suitable circuit and even designed a PCB layout.

You can download the Eagle files for this from the Elektor website page for this article (www.elektor.com, archive #080329-1.zip).

But first let's consider the basic question: artificial sparkling or glittering can best be simulated by having the different light sources switch on randomly at a particular frequency. Surprisingly enough, it is not all that easy to generate truly random sequences electronically.

However, the electronic randomness does not necessarily have to be perfect for glitter applications. Patterns that appear to be random are sufficient for the desired visual impression.

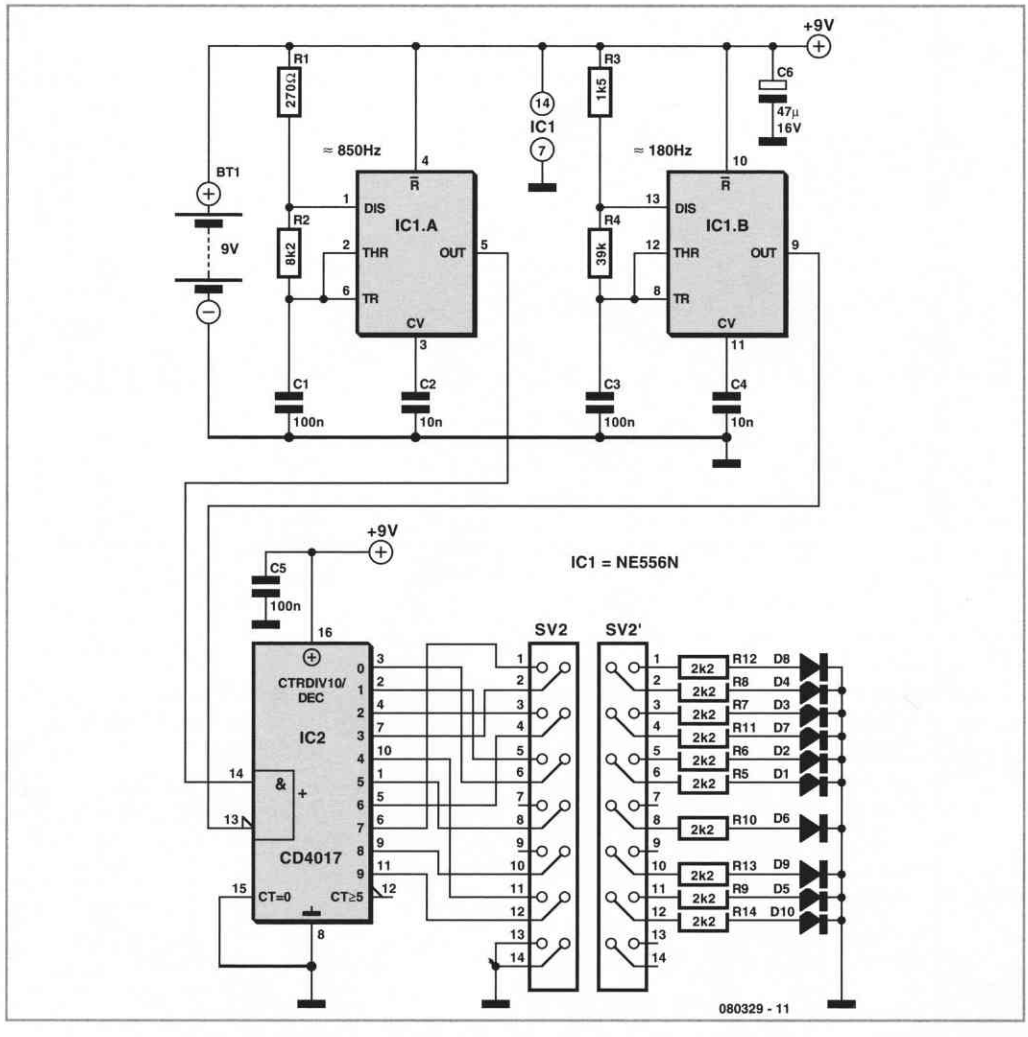

Based on this principle, the author uses two 556 timer ICs to generate signals whose frequencies (850 Hz for IC1a and 180 Hz for IC1b) can be divided by each other without yielding an integer divisor.

A decimal counter operated in an unconventional manner uses these two signals to produce a constantly pseudo-random pattern on its ten outputs, which repeats itself only very infrequently.

This behaviour is obtained by applying the higher-frequency signal to the CLK input of counter IC2, with the CLK Inhibit input on pin

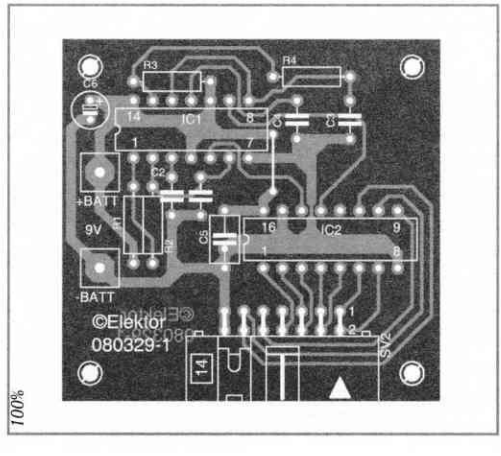

13 being driven by the lowerfrequency signal. The result is 'genuine pseudo-random' blinking.

LEDs can be connected directly to the ten outputs, since a CMOS output can anyhow only supply a few milli-ampères. However, it is recommended to use series resistors (2.2 kΩ to 4.7 kΩ) to reduce the load on the IC outputs if the supply voltage is higher than 10 V. If you want to have more than ten LEDs glitter, you can naturally build several copies of this circuit.

(080329-1)

054 Universal LCD Module

MICROCONTROLLERS

Ullrich Kreiensen

Interfacing an LCD to a microcontroller system is daily bread and butter for the average electronics engineer. There are innumerable variants and many circuit suggestions for interfacing the six to seven LCD signals to a microcontroller system. In an effort to prevent continual reinvention of the wheel the author of this design used this simple formula:

(LCD module + Atmel controller) + (a touch of software) = (universal display module)

to design this versatile display unit and PCB.

There are no surprises in the circuit diagram in **Figure 1**. A low cost controller type AT90S2313 takes commands from the serial interface and controls a standard 2×16 LCD display module. The controller also decodes key presses on the 4×4 keypad. This configuration is usually sufficient for most applications requiring just a basic user input/output device.

From a hardware perspective there is not too much to describe because all of the functions are performed in software. Transistor T1 controls the brightness of the LED backlight using Pulse Width Modulation (PWM), the average LED current is given by:

$$\frac{U_{R1}}{R1} \times \frac{t_{ON}}{(t_{ON} + t_{OFF})}$$

Where U_{R1} is the voltage at LED+ on K1 minus the voltage drop across A and K on the LCD controller pins and $t_{ON} / (t_{ON} + t_{OFF})$ is the mark-space ratio of the PWM drive signal produced by IC1. The maximum permissible LED current is specified in the display module data sheet.

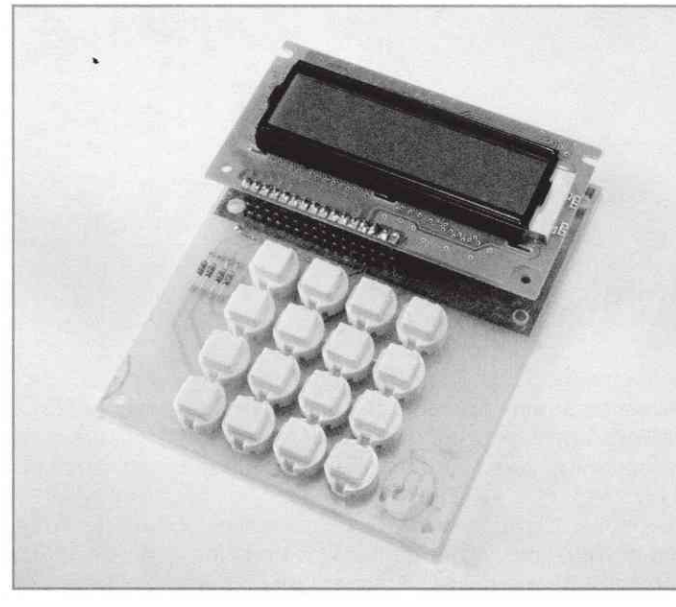

1

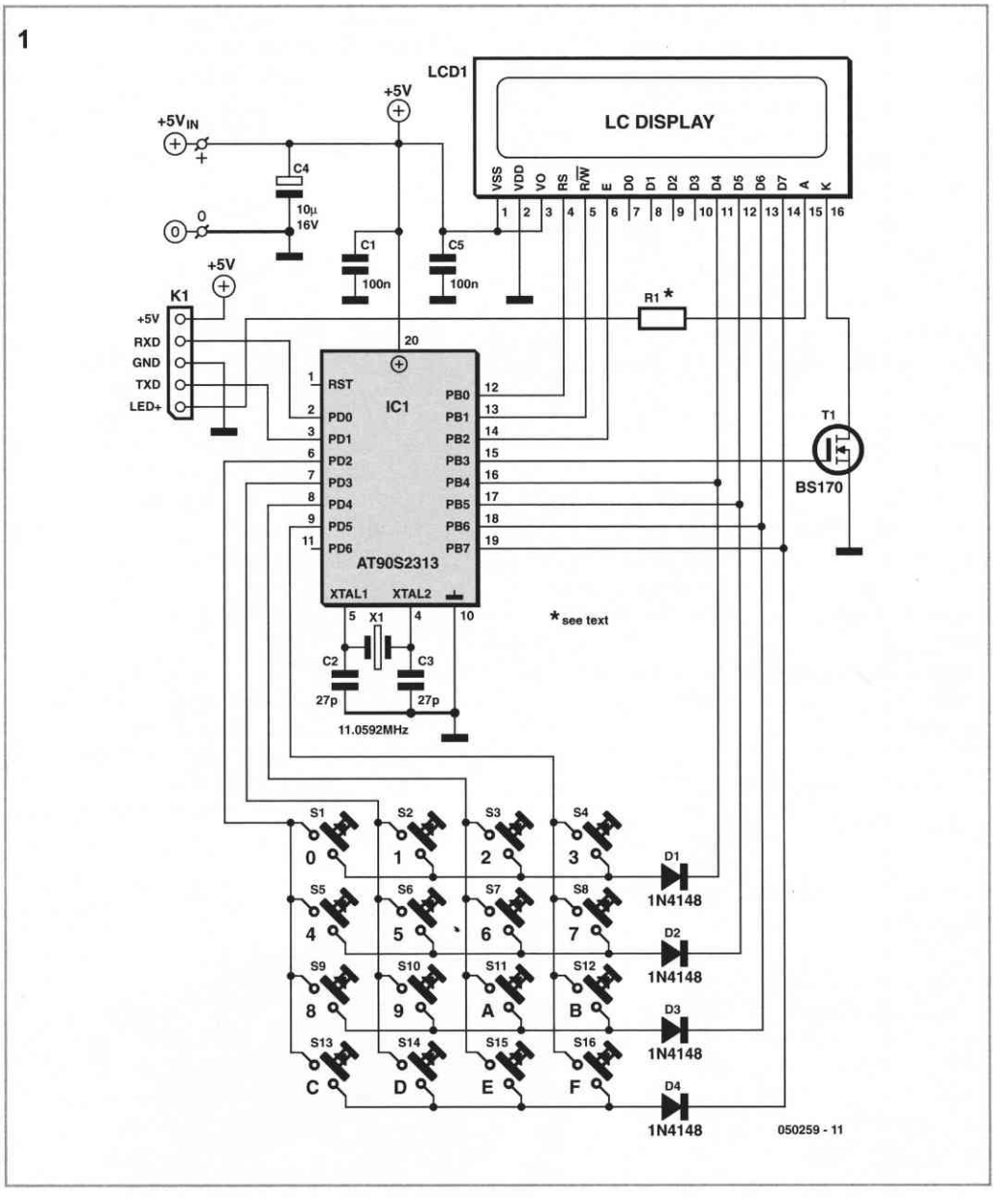

Software for IC1 can be downloaded from *www.elektor.com* for free, the file number is 050259-11.zip. A preprogrammed controller can also be ordered from the site shop as item 050259-41.

The CodeVision AVR compiler was used for software development. A demo version is available on the Internet but this version contains a restriction of 500 bytes on the maximum code size. A 'modification' in the code gets round this by specifying the larger 8515 controller and then resetting the stack pointer to the correct value for the 2313, the overall effect is to increase the code space to 2 kBytes.

The complete module can be controlled by sending 'escape sequences' to the serial communication port.

These consist of an ASCII 'escape' character (27 in decimal) followed by a command character. A list of these commands is given in **table 1**; they can also be used for control by a general purpose terminal program to facilitate the process of software development and debugging.

COMPONENTS LIST

Resistors
R1 = see text

Capacitors
C1, C5 = 100 nF
C2, C3 = 27 pF
C4 = 10μF 16V radial

Semiconductors
D1-D4 = 1N4148
T1 = BS170
IC1 = AT90S2313,
order code 050259-41

Miscellaneous
X1 = 11.0592MHz quartz crystal
S1-S16 = pushbutton type D6
LCD module, 2x16 characters
PCBs, ref. 050259-1

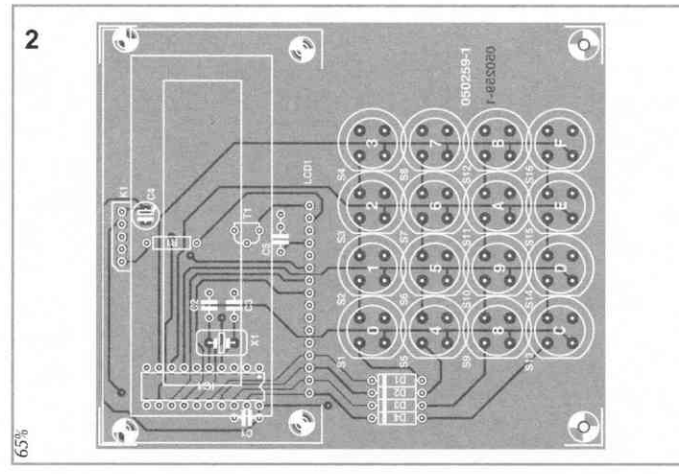

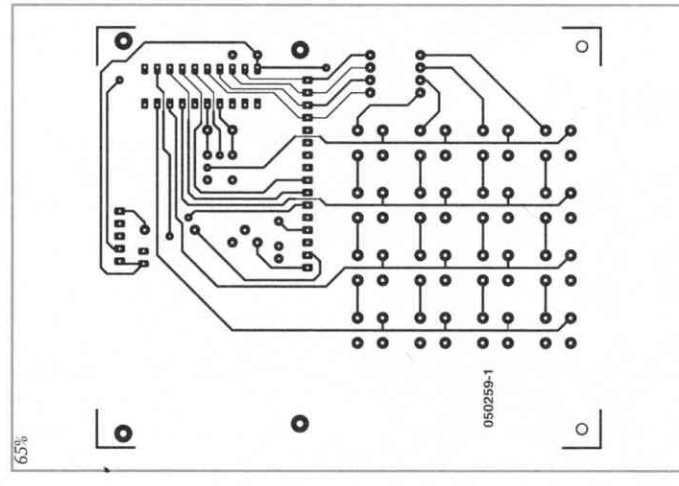

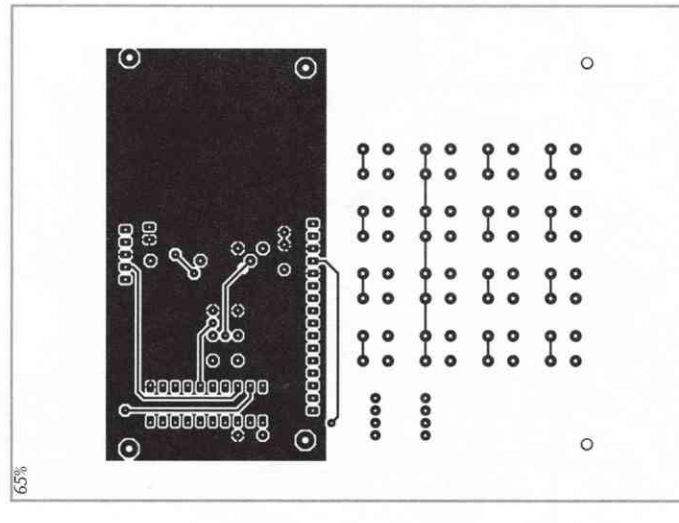

In addition the display has a 'RAW' mode which writes all subsequent characters directly to the display. An 'Esc N' sequence switches it back to normal mode.

Finally special characters can be created and used for display dimming; further details are contained in the downloadable PDF file.

Table 1. Command character function in 'N' mode.

Dec.	ASCII	Function
8	BS	clear the character on the left of the cursor
9	TAB	move the cursor to position 0 or 8
10	LF	Line Feed – change line
11	HOME	cursor to top left hand corner
12	CLR	clear the display
13	CR	cursor to the start of the line
27	ESC	begin the command sequence
28	RIGHT	shift cursor one position right
29	LEFT	shift cursor one position left
30	UP	change the line the cursor is on (like LF)
31	DOWN	change the line the cursor is on (like LF)

Figure 2 shows the populated doublesided PCB. The LCD module and keypad are mounted on one side while the controller and all the other components are fitted to the reverse.

Fit a good quality socket for IC1 so that it can be easily removed for future software updates.

(050259-1)

055 Tracking Solar Panel

HOME AND GARDEN

Manfred Schmidt-Labetzke

This small 12 V solar power source maintains its orientation towards the sun under control of a timer rather than the more usual light-sensitive arrangement. All the parts needed to build the project can be found in a well-stocked hardware shop or DIY store.

The axle is made from the core of a roller blind with two bearings. Suitable angle brackets are readily available to hold these bearings. The axis of rotation is set vertically, and the whole thing is directly driven by a battery-powered rotisserie motor. This motor already includes a gearbox to give a slow rotation and is capable of turning in either direction, and so one could hardly ask for a more perfect device for the job.

The upper end of the roller blind axle must be filed down to a suitable (generally square)

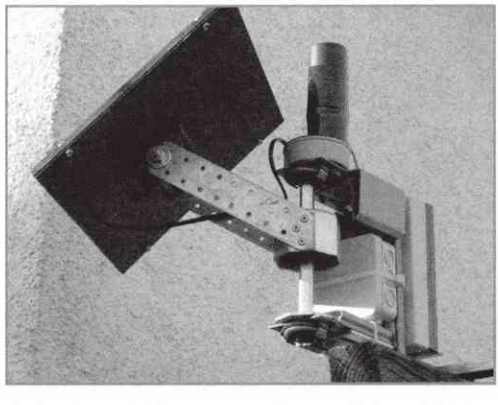

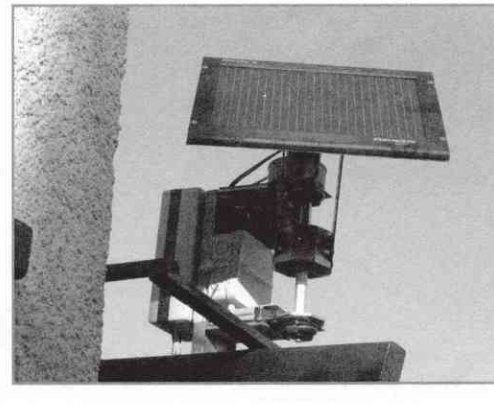

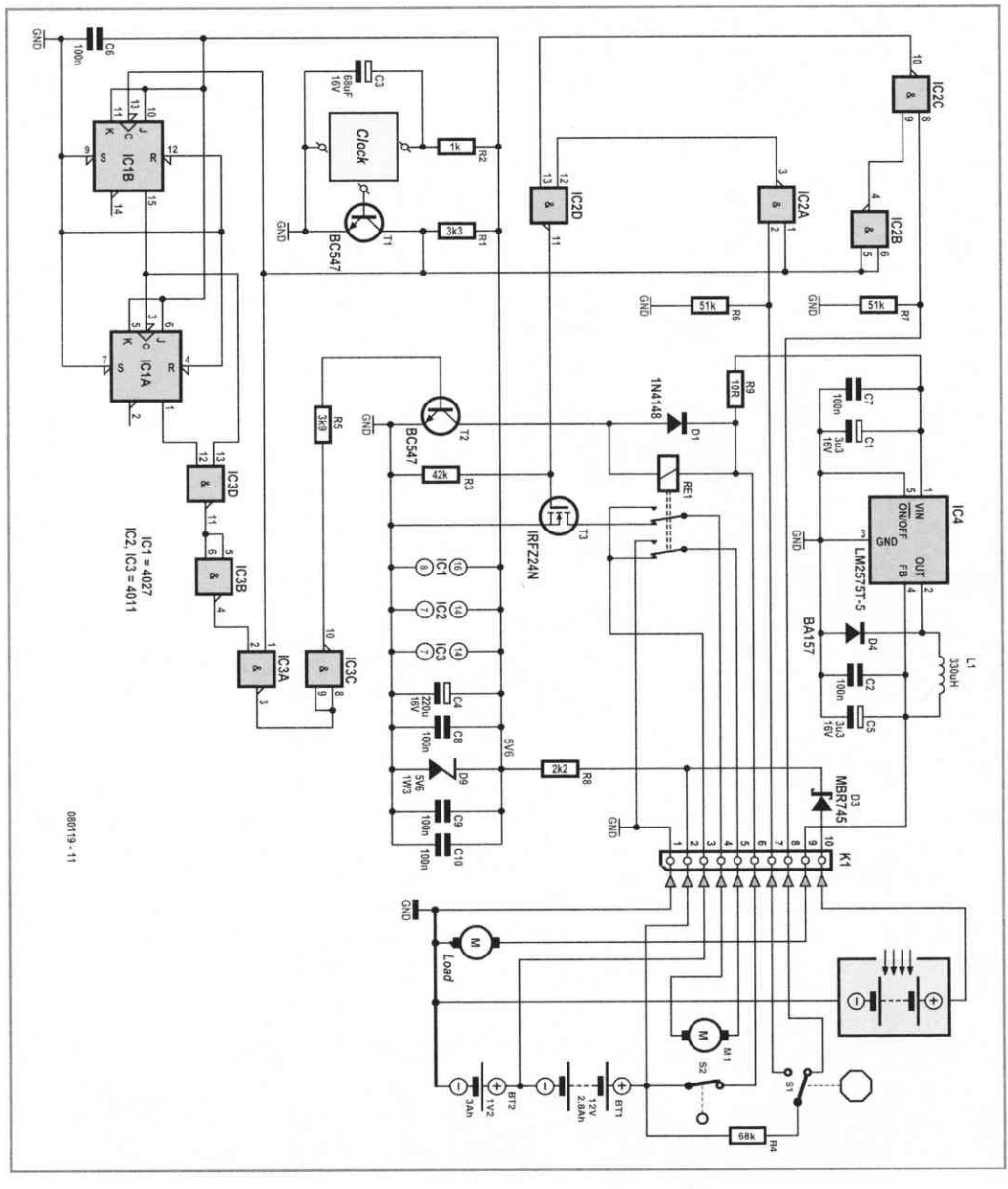

cross section to allow it to be driven by the rotisserie motor.

Now to the electrical department to find a cheap electronic mains timeswitch. The switch must be programmable for at least four on-off cycles per day. For the solar panel itself any 12 V solar charger designed for car, camping or boat use is ideal. It should be at most 0.25 m^2 in area as otherwise the force of the wind may be too great for the gears in the rotisserie motor's gearbox to withstand. The angle of inclination of the module is fixed, and depends on the latitude at which it is installed.

The mains portion of the timeswitch and the switching relay are not required and are re-

moved. The remainder of the timeswitch will act as a clock which causes the axle to be rotated eight times during the course of each day: each on-to-off or off-to-on transition of the clock will advance the axle by 22.5 degrees from east to west via south. The angle through which the roller blind axle turns is defined by its octagonal shape: the corners operate a microswitch S1, which is fitted with an actuation lever. The position of the microswitch must be set carefully so that the switch is closed when the lever is pushed aside by a corner and open when between corners. Each time the timeswitch changes state IC2, a CMOS 4011 which contains four NAND gates, switches the drive motor on via p-channel MOSFET T3 for as long as necessary until the microswitch also changes state. Reasonable settings for the timeswitch have been found to be as follows: 7.30 am on; 9.00 am off; 10.30 am on; 12 noon off; 2.00 pm on; 4.00 pm off; 6.00 pm on; and 9.00 pm off.

After eight moves the solar panel has rotated through a total of 180 degrees and points directly west. Counter IC1, constructed from the two CMOS JK flipflops in a 4027, detects the eighth clock pulse and turns on relay Re1 via IC3. This in turn reverses the polarity of the power to the motor and the panel starts to turn back from west to east. When it reaches its original position facing due east limit microswitch S2, actuated directly by the solar panel, opens. The connected load is also switched on and off by S2, which is open during the night and closed during the day.

The author uses his solar panel to operate a small water pump. For this purpose the output of the panel is regulated to 5 V using a highly efficient switching regulator. Alternatively, 12 V lighting could be powered from the panel, with no need for the regulator.

Of course, both the control electronics and the timeswitch need to be housed in a waterproof enclosure. Energy storage to cover for the inevitable cloudy days can be provided by a 12 V battery comprising ten 2800 mAh AA-size NiMH cells in a suitable battery holder, which can be fitted inside an ordinary electrical junction box. A 3000 mAh D cell is fitted in the battery compartment of the rotisserie motor, wired in series with the 12 V battery and also charged from the solar panel.

The motor and battery connections from the rotisserie motor are taken to the control circuit using a four-core cable. The rotisserie motor's switch is removed. Resistor and capacitor values shown in the circuit are not particularly critical, and other similar types can be substituted for T1, T2 and T3. A Schottky diode should be used for D3, which prevents current flow back into the solar panel, in order to minimise power losses. The 5 V regulator operates at around 250 kHz and so a high-speed switching diode is needed for D4. Using an ordinary 1N4007 considerably reduces the efficiency of the regulator and is therefore not a good idea. A small toroidal-core inductor is used for L1.

(080119-I)

056 Mains Slave Switcher I

HOME AND GARDEN

Bart Trepak

Many power woodworking tools such as saws and sanders have a provision for connecting a vacuum cleaner hose to suck up the dust and debris produced by their operation. The problem is of course that the vacuum cleaner must be switched on when the tool is switched on and as the operator's attention must be directed towards the work in hand especially when a blade with large teeth is spinning only inches from his fingers, there is often little incentive to look away to locate the vacuum cleaner switch.

This unit was designed to fulfil this function by automatically switching on the vacuum cleaner when the power tool is switched on.

In this circuit, current flow is sensed using a reed relay which is not only cheap but provides a positive indication that current is flowing and dissipates very little power. Reed switches are often used in burglar alarms where they sense the magnetic field from a small magnet but it is also possible to produce a magnetic field by winding a coil around the reed switch and passing a current through this.

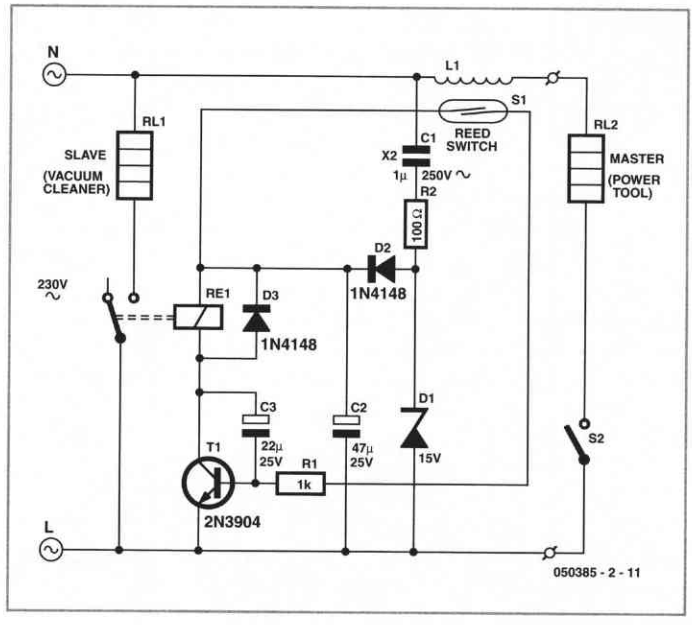

The circuit diagram shows a simple mains slave switch based on this idea. The coil may be wound directly onto the reed switch using insulated single core hook-up wire or enamelled copper wire of sufficient gauge to carry the current drawn by the power tool (or master appliance).

In practice this should be as thick as possible to cater for any power appliance while still enabling a sufficient number of turns to be accommodated to produce the required magnetic field which will depend on the reed switch and is therefore best determined by experiment. As a guide, a one-inch reed switch with 40 turns reliably switched on with the current flowing through a 150- watt lamp (approx. 625 mA) but larger reeds may require more turns. If the master appliance draws less current (which is unlikely with power tools) more turns will be required.

The reed switch is used to switch on transistor T1 which in turn switches the relay RE1 and powers the slave appliance. Since reed switches have a low mechanical inertia, they have little difficulty in following the fluctuations of the magnetic field due to the alternating current in the coil and this means that they will switch on and off at 100 Hz. C3 is therefore fitted to slow down the transistor response and keep the relay energised during the mains zero crossings when the current drawn by the appliance falls to zero and the reed switch opens.

C1 drops the mains voltage to about 15 V (determined by zener diode D1) and this is rectified and smoothed by D2 and C2 to provide a DC supply for the circuit.

The relay contacts should be rated to switch the intended appliance (vacuum cleaner) and the coil should have a minimum coil resistance of 400 Ω as the simple d.c. supply can only provide a limited current. C1 drops virtually the full mains voltage and should therefore be a n X2-class component with a voltage rating of at least 250V AC.

(050385-2)

Warning
The circuit is by its nature connected directly to the mains supply. Great care should therefore be taken in its construction and the circuit should be enclosed in a plastic or earthed metal box with mains sockets fitted for the master and slave appliances.

057 Wireless Audio Transmitter

RF (RADIO)

C. Tavernier

Sitting peacefully under a tree at the bottom of your garden, or stretched out beside your swimming pool, you may feel like listening to your favourite music from your hifi. Rather than turning the volume up beyond reasonable limits and risking upsetting all your neighbours or attracting the wrong audience, we suggest building this little wireless audio transmitter/receiver combination. Using the UHF ISM (industrial, scientific, medical) band and quality FM (frequency modulation), it won't impair the sound quality and will let you listen nice and discreetly.

The transmitter uses a well-known module manufactured for some years now by Aurel as their 'FM audio transmitter'. It works in the licence-free 433.92 MHz band and so allows our project to operate completely legally as the transmitter is type-approved to quite strict technical specifications. Note however the frequency you're using is not exclusive as it is shared by many other wireless devices such as headphones and key fobs for garage doors and so on. The equipment is low-power however and should have a short range.

The Aurel module is a complete FM audio transmitter designed for powering from 12 V. The only external components required, R5, R6, and C5, form the preemphasis (high-boost) network specific to frequency modulation.

Used alone, this module offers a typical audio input sensitivity of 100 mV rms. So we are driving it from an opamp with gain adjustable between 0.5 and 5, extending the voltage range from 50 to 500 mV, to make it compatible with any audio device line output.

Note in passing that, if you reduce resistor R1 to 2.2 kΩ, you can increase the sensitivity to 2.5 mV so that the transmitter could then be used as a UHF radio mic for use in shows and events, for example.

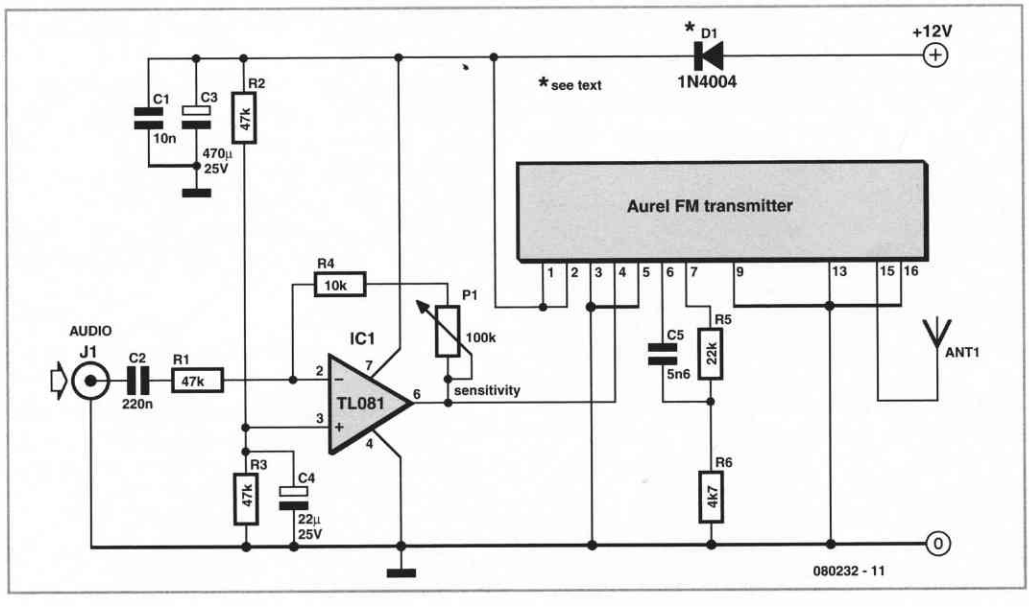

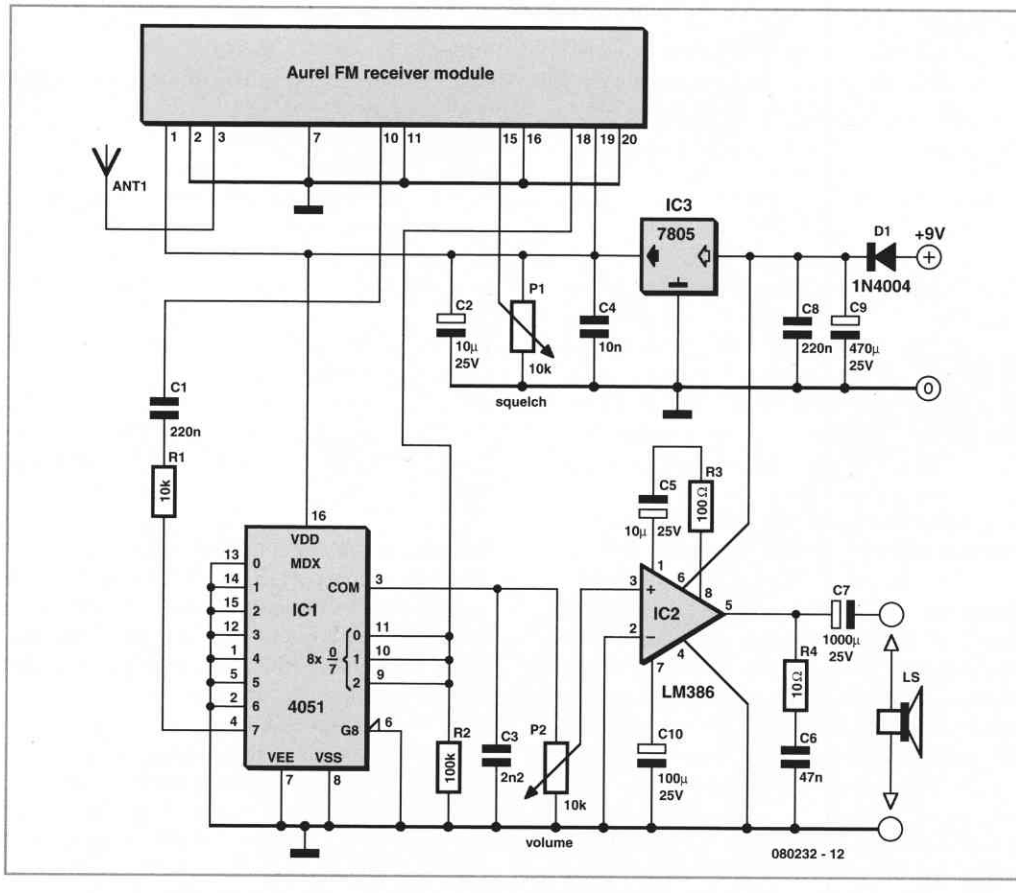

The power supply can be obtained from a 12 V battery or a 'plug-top' power supply; diode D1 protects the circuit from reversed polarity.

The receiver is just as simple, since it uses the complementary module to the previous one, again from Aurel, and naturally called their 'FM audio receiver'.
This receiver has a squelch (FM noise silencing) adjustment, set by the voltage applied to pin 15. Potentiometer P1 connected to this makes it possible to adjust the squelch threshold so as to have a receiver that won't output noise in the absence of a signal, using the information provided on pin 18. This is High when a signal is present and Low when absent. Here it drives an 8-into-1 CMOS analogue multiplexer, of which only input 8 is used. This solution employs a very cheap, good-quality analogue switch that is easy to use.
Its output passing via the volume control P2 and is applied to the well-known small integrated power amplifier LM386. The transmitter's RF output power of a few hundred milliwatts is more than adequate for such an application, and its quality likewise, especially if you combine it with a loudspeaker worthy of the name, with a pair of headphones as the next best alternative.
The Aurel receiver module and CMOS multiplexer both require a 5 V supply; this is stabilized by a standard 3-terminal regulator. The circuit as a whole is powered from 9 V, and is also protected against possible reverse polarity by diode D1.

Given the relatively high current consumption of the amplifier, especially if you use it

for longer periods, rechargeable NiMH batteries will obviously be preferable to primary cells, which wouldn't last very long and will turn out rather expensive in the long term, as well as bad for the environment.
As far as the antennas are concerned, for both transmission and reception, simple quarter-wave whips ensure a range of a hundred metres or so – even more if line-of-sight. You can of course buy such antennas ready-made, but a simple piece of stiff wire around 17 cm long (that is a quarter wavelength at 433.92 MHz) will do the job just as well, and cost a lot less.
Equipped with these two modules you can make the most of your music wherever you like. Don't forget, though, that outdoors, the best music of all is that of birds, that is, the feathered variety.

www.tavernier-c.com (080232-I)

058 1-Wire Thermometer with LCD

TEST AND MEASUREMENT

Heino Peters

Although accurate digital thermometers are now available at low cost, it remains exciting and instructive to build one yourself. The present circuit is particularly intended to help the reader in the use of a PIC processor type PIC16F84 (see *www.microchip.com*), a temperature sensor with 1-wire protocol type DS1820 (see *www.maxim-ic.com*), an LCD screen with 2× 16 characters (HD44780 compatible) and a light sensor with an LDR that determines whether the background lighting of the LCD should be on.

The circuit is provided with a 9-way sub-D connector that enables it to be linked to the COM gate of the PC. This connection also enables the circuit to be programmed as appropriate.

Quartz crystal X1 in combination with capacitors C1 and C2 ensures that the PIC processor, IC1, runs at a frequency of 4 MHz and that each instruction in the program lasts exactly 1 μs. This is useful for the timing in the program, which, by the way, is available as a free download on the Elektor website (file no. 060090–11.zip). Resistors R3, R4 and R5 enable IC1 to be programmed directly by a PC via connector K1. Resistor R1, which may any type of LDR, and R2 form a potential divider that, depending on the ambient light, sets a '0' or a '1' on input RB4 of IC1. The data line of temperature sensor IC3 is connected to terminal RA4 of IC1. This terminal is the only open-collector one of IC1 and is exactly what is needed for the 1-wire data line. Resistor R7 'pulls up' the data line in quiescent operation. The right-hand section of the diagram enables the display of the temperature. To limit the number of connections to the processor,

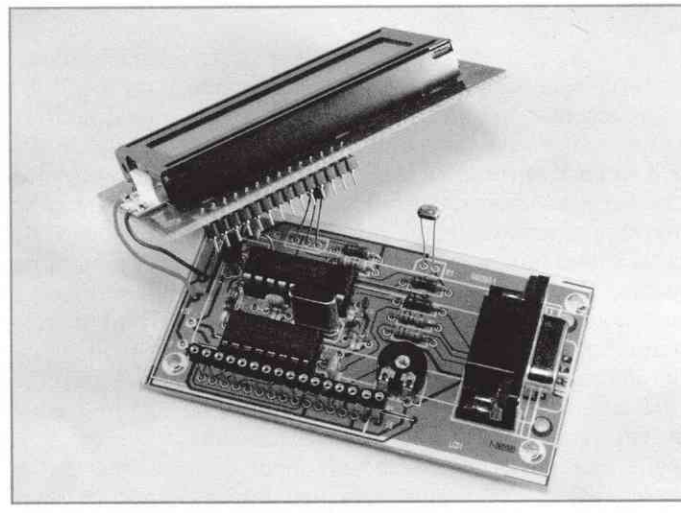

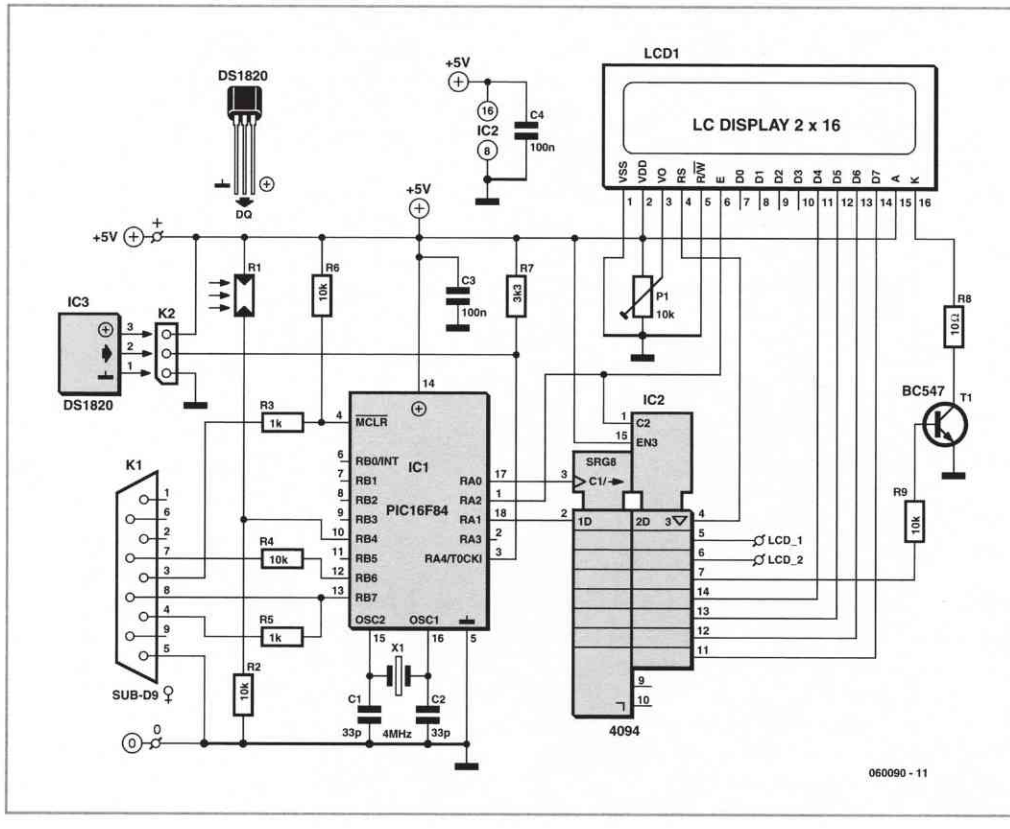

the LCD is controlled via the series/parallel converter in IC2. The LCD proper is driven in the 4-bit mode (DB4–DB7). Also, the Register Select, RS, and the backlight must be provided with the appropriate signals. IC2 converts the 8 bits provided serially by IC1 into 8 parallel bits. The rising edge of the strobe signal from RA2 instructs IC2 to set the previously received eight bits at the outputs. The falling edge clocks them to the screen via enable input E of the LCD. Since only six of the eight bits are needed, individual extensions may be accommodated at outputs LCD1 and LCD2: for instance, a buzzer or an LED. The combination of R9, T1 and R8 provides a current of 100–200 mA from output Q3 (pin 7) of IC2 to the backlight of the LCD. The contrast of the display may be adjusted with P1.

The associated program is written in assembly code; it may be adapted as needed by downloading development area MPLAB from Design a project in MPLAB and within this, load the source code available at the Elektor website (the .ASM file). After you have added your own adaptations, make a .HEX image by clicking on the BUILD icon.

Then, use the free program NTPICPROG.EXE from Andres Hansson (*www.geocities.com/Cape Canaveral/7706/ntpicprog.zip*) to program the .HEX file in the PIC via the COM gate of the PC. The 5-V supply rail must remain connected during programming. Do not program the PIC with a notebook, but use a desktop PC, since the voltage levels at the COM gate of a notebook often are only 3–5 V, whereas a

PIC16F84 Configuration Bits
Oscillator XT (01
WDTE off (0)
PWRTE on (0)
CP off (1) (all bits)

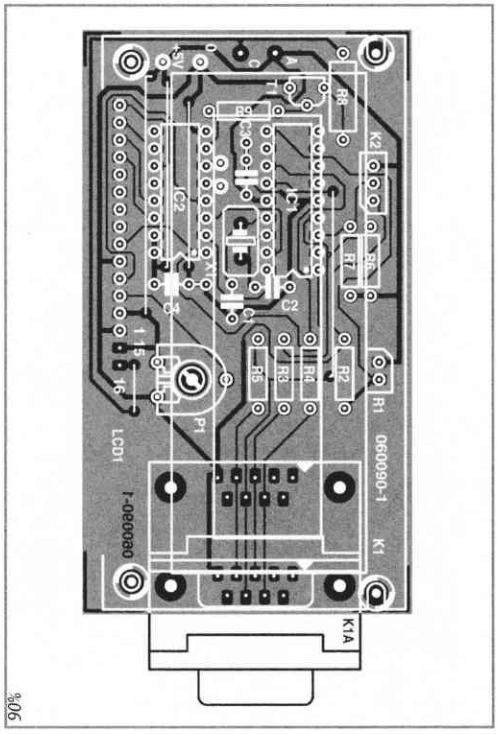

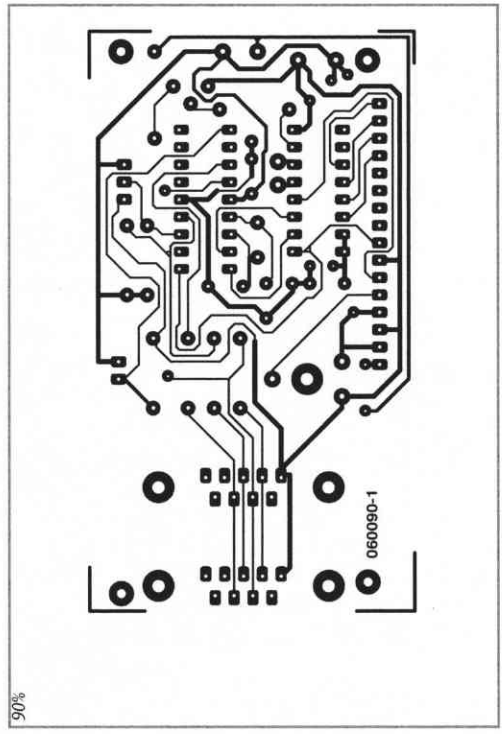

COMPONENTS LIST

Resistors
R1 = LDR (small model)
R2, R4, R6, R9= 10 kΩ
R3, R5 = 1 kΩ
R7 = 3kΩ3
R8 = 10 Ω
P1 = 10 kΩ preset, horizontal

Capacitors
C1, C2 = 33 pF
C3, C4 = 100 nF

Semiconductors
T1 = BC547
IC1 = PIC16F84A-04CP (programmed, order code 060090-41)
IC2 = 4094
IC3 = DS1820, DS18S20

Miscellaneous
LCD = alphanumerical LCD, 2x16 characters, 44780-compatible
K1 = 9-way sub-D socket (female), angled, PCB mount
K2 = 3-way SIL pinheader
X1 = 4MHz quartz crystal, parr. cap. 32pF, HC49 case
5 wire links
PCB, ref. 060090-1 from The PCBShop
Source and hex code files, ref. 060090-11, free download from *www.elektor.com*

minimum of 10 V is needed. Also, do not use a USB/RS232 converter, because that usually confuses the timing.

Once you have this setup working, the step to other applications is easy.
The circuit is readily constructed on the printed-circuit boards shown. Start with the wire links, so that they are not overlooked at a later stage. If you do not want to program the PIC yourself, a programmed one may be ordered from the Elektor shop (order code 060090–41). A power source of 5 V capable of providing a current of up to 100 mA is required.

Note that the circuit does not provide protection against polarity reversal or too high a supply voltage.

(060090-1)

059 Five-output Video Distribution Amplifier

Eduardo Corral

Video fans and professionals in the field will find in this small signal distributor/amplifier an excellent ally when it's necessary to distribute a single video signal across several equipments. The circuit shown here should have a lot of applications.

Basically, the distribution amplifier takes the composite video signal from a video player (VCR) or a video generator (analogue output) and buffers it in such a way that it can be simultaneously applied to up to five different video equipment inputs, like monitors, TV sets, other VCRs and so on. For example, in a hall, the image produced by a central DVD player can be shown on five different TV screens with the sound reproduced through a separate amplifier.

The circuit is based on the type EL2020 (or similar) operational amplifier which is marled by large bandwidth. The EL2020 amplifies the video signal applied to the input stage, with a gain adjustment range of ±6 dB. Output transistor Q1, a 2N3866, applies the video signal to the five outputs designed to drive loads with 75-Ω impedance.
The circuit requires a ±12 V symmetrical supply voltage, which can be obtained from a conventional power supply as shown by the schematic.

(080478-I)

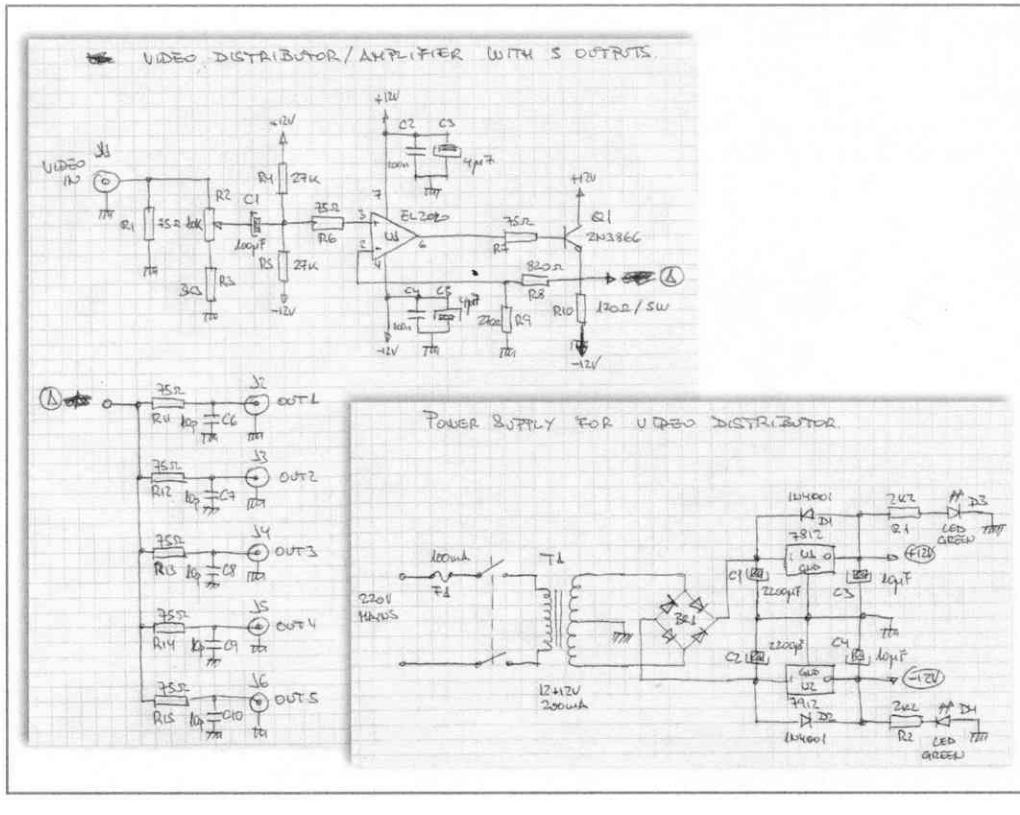

060 Electronic Touch Switch

Heino Peters

Mechanical contacts have the disadvantage that they wear out. That is why it is practical to use an electronic 'touch switch' in some situations. With such a touch switch the resistance of the human skin is used for the switching action.

The schematic shows the design of a circuit that senses the resistance of the skin and converts it into a useful switching signal. The touch switch contacts can be made from two small metal plates, rivets, nails, etcetera, which are placed close together on a non-conducting surface. In this circuit a comparator of the type LM393 has been used.

In the idle state there is, via R1, a voltage equal to the power supply voltage on the non-inverting input of IC1a. Because the inverting input of IC1a is set with R2 and D3 to D5 at the supply voltage minus 1.8 V, the open-collector output of IC1.a is, via R3, equal to the power supply voltage. This voltage is inverted by IC1.b. The voltage at the non-inverting input of IC1.b amounts to half the power supply voltage (through voltage divider R4 and R5) and is lower than the voltage on the inverting input. The output of IC1.b is therefore a '0'.

If the two touch contacts are bridged with a finger, the voltage at the non-inverting input will become low enough to cause the comparator to toggle state. The moistness of the skin results in a resistance of 1 to 10 MΩ.

If this circuit is used in the vicinity of equipment that's connected to the mains, then it can be sufficient to touch only the upper contact to operate the switch, provided that the circuit has been earthed. The body then acts as an antenna which receives the 50 Hz (or 60 Hz) from the mains. This is enough to toggle IC1.a at the same 50 Hz. C1/R3 prevent this 50 Hz from reaching the input of IC1b and provide a useable 'pulse' of about 10 s at the output of IC1.b.

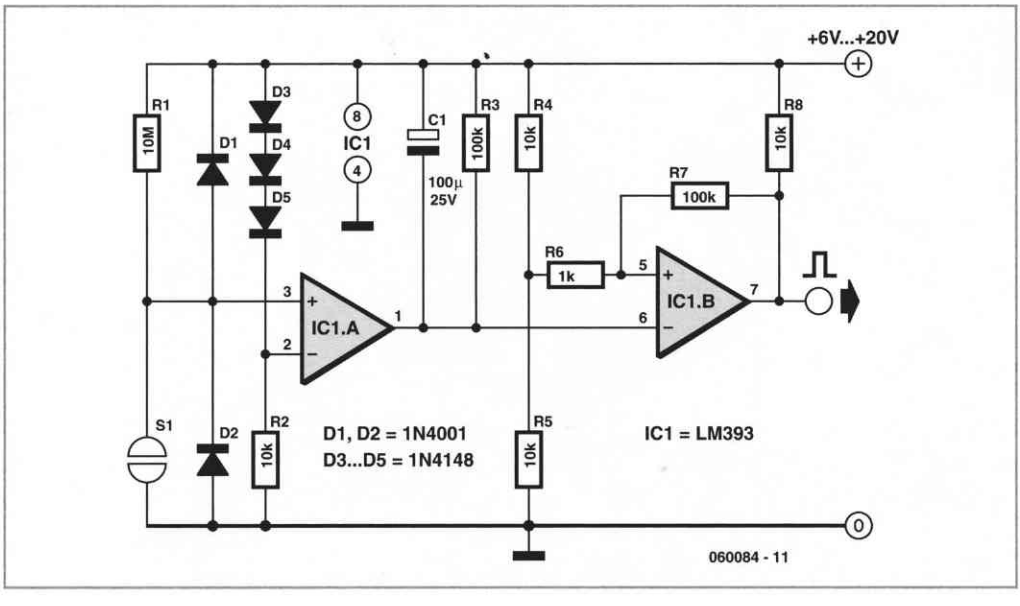

Note that a fly walking across the touch switch conducts enough to generate a switching signal. So do not operate important things with this circuit (such as the heating system or the garage door). Do not make the wires between the touch contacts and the circuit too long to prevent picking up interference.

The power supply voltage for the circuit is not very critical. Any regulated DC voltage in the range from 6 to 20 V can be used.

(060084-1)

061 Pitch Meter for Model Helicopters

HOBBY AND MODELLING

Hanspeter Povel

'Pitch' is the name given to the angle of inclination of the rotor blades of a helicopter. In model helicopters the pitch angle is critically important to flight performance. Typical pitch values lie in the range from –3 degrees to +10 degrees.

There are various ways to check and set the rotor blade angle. One method uses a flybar rod (which resembles the small auxiliary rotor blade under the main rotor) set horizontal with the help of a spirit level, a protractor fixed to the rotor blade, and a plumb line. The method does work, but the rotor axis must be kept as vertical as possible and the blades as horizontal as possible to obtain an accurate measurement. As so often, a little electronics can make life a lot simpler.

Searching for a suitable IC, the author came upon the SCA100T inclinometer from VTI

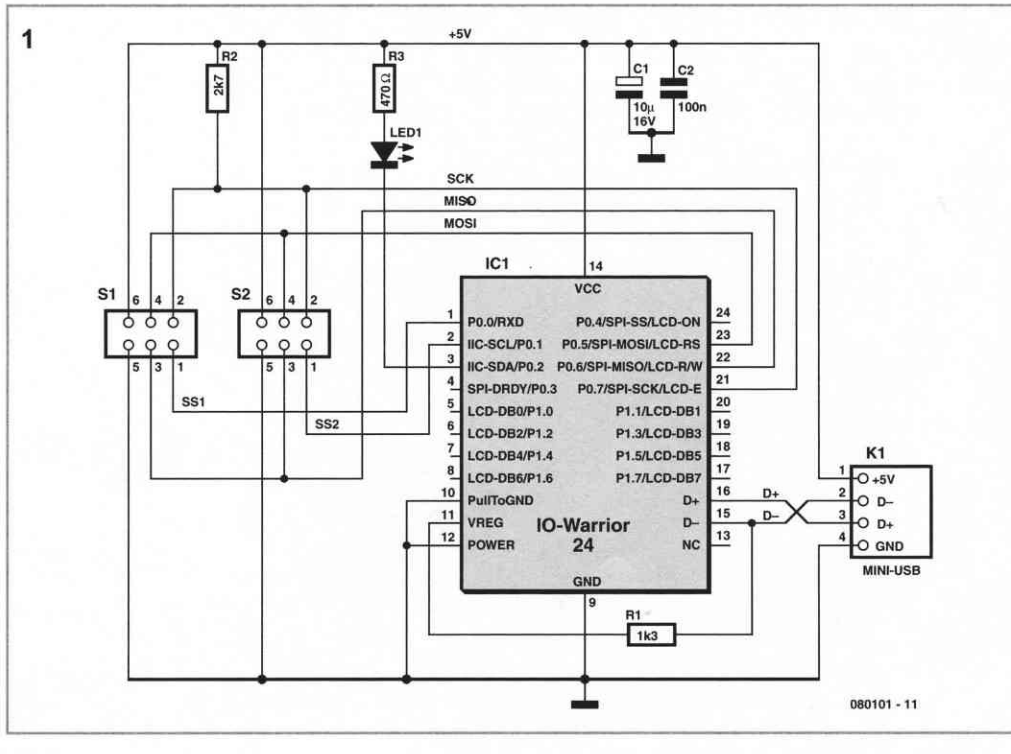

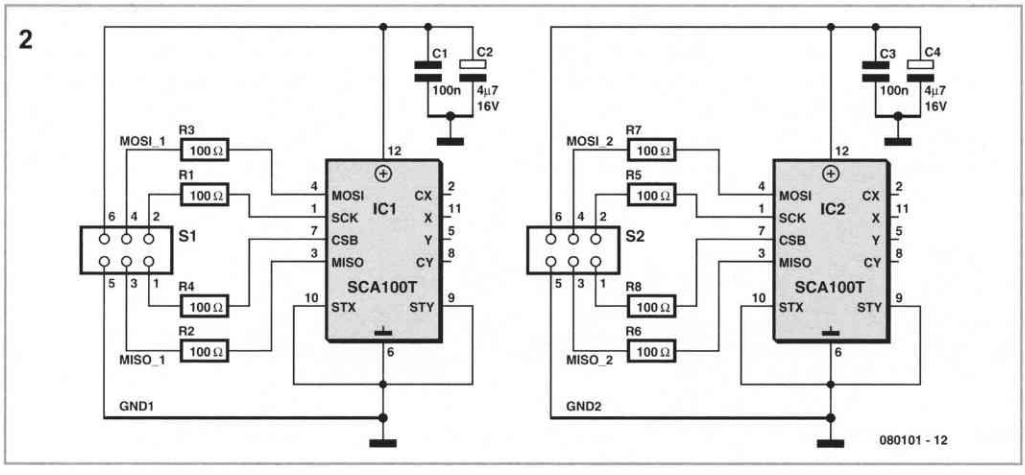

Technologies [1]. The device is a micromechanical sensor which measures angle on two axes using a capacitive method. The SCA100T-D01 has a range of –30 degrees to +30 degrees and a resolution of 0.0025 degrees. The measured angle can be read out in digital form over an SPI port.

If we want to connect the device to a laptop or desktop PC, we need a suitable interface. A simple approach is to use a ready-made USB-to-SPI converter such as the IO-Warrior 24 from Code Mercenaries [2]. As the circuit in **Figure 1** shows, this unit can drive two SPI ports simultaneously, and also sports an LED to indicate operation. The circuit diagram shown in **Figure 2** therefore shows how two identical inclinometers are connected to the two SPI ports.

The completed module is shown in **Figure 3**. One inclinometer is screwed to a black guide plate in order to simplify attaching it to the rotor blade. The other inclinometer, which is mounted on a grey block, is attached to the flybar.

The whole assembly is shown in **Figure 4**, attached to a model helicopter and ready to make some adjustments.

The last piece in the jigsaw is some suitable software running on the host PC. Using the IO-Warrior hardware simplifies matters considerably in talking to the hardware, as libraries are available for download from the Code Mercenaries website to allow access to

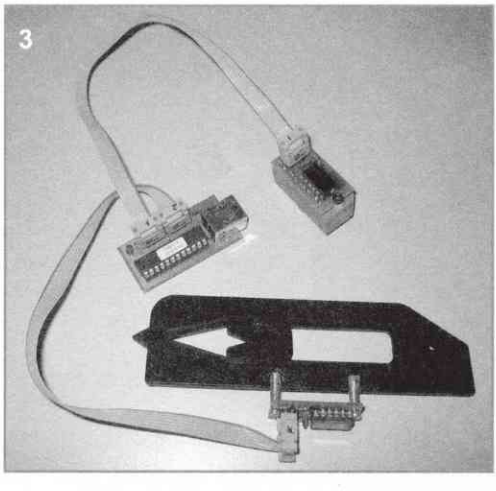

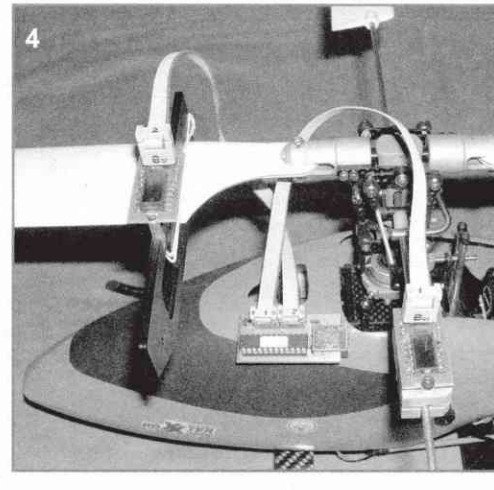

the SPI data from programs written in C++ or in Visual Basic. The author plumped for the latter language, as a free development environment for it is available from Microsoft. He then wrote a short Visual Basic program to display the measured angles, rounded off to the nearest tenth of a degree.
The two values measured are the inclinations of the flybar and of the rotor blade. The difference between these two values can be calculated to yield the pitch angle. Since the sensors measure angles on two axes, the less relevant values are shown in smaller text on the display. These values depend on the horizontal alignment of the model and should be less than ten degrees. The sign (positive or negative) of the displayed results can be changed to suit the mounting arrangement with a click on the button marked '+/–'. The Visual Basic software is available as a free download from the Elektor web page for this project.

(080101-I)

Web Links
[1] *www.vti.fi/en/products-soluions/productfinder/search/motion.html*
[2] *www.codemercs.com*

062 Active Antenna

RF (RADIO)

Stefan Delleman

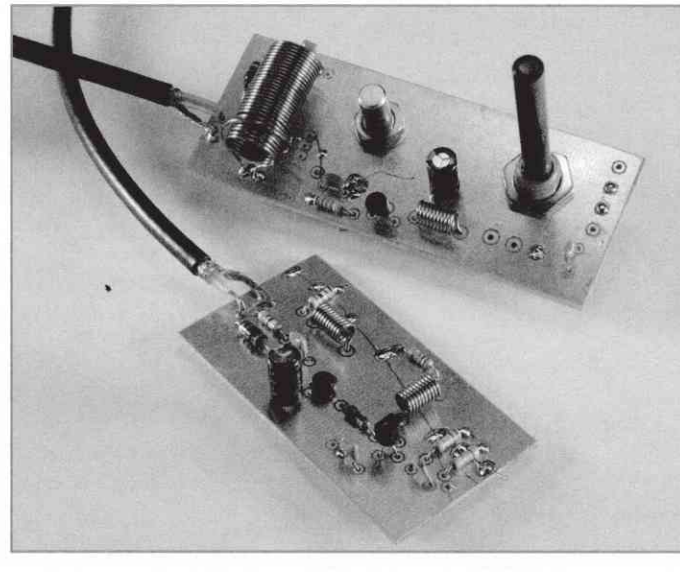

Short-wave listeners often are not able to, or allowed to, install a long-wire antenna or other large dimension antenna in or around the home.

In such cases, the present active antenna, intended for the frequency range 3–30 MHz, may be found useful.

The author used a 1-metre long rod or brass tube with a diameter of 2–6 mm. The circuit consists of two parts, one to be located close to the antenna, while the other should be placed in the associated power supply of the receiver. The two sections may be connected by a coaxial cable of up to 20 m long without causing any discernible attenuation.

The antenna signal is pre-amplified by a two-stage combination, T1-T3. The main amplification is provided by the input transformer, formed by L3, L4, and L5, in the receiver section. This is followed by a switch that enables the frequency range to be selected (3–10 MHz in position LOW, and 9–30 MHz in position HIGH).
The signal strength may be adjusted to suit the receiver with potentiometer P1.

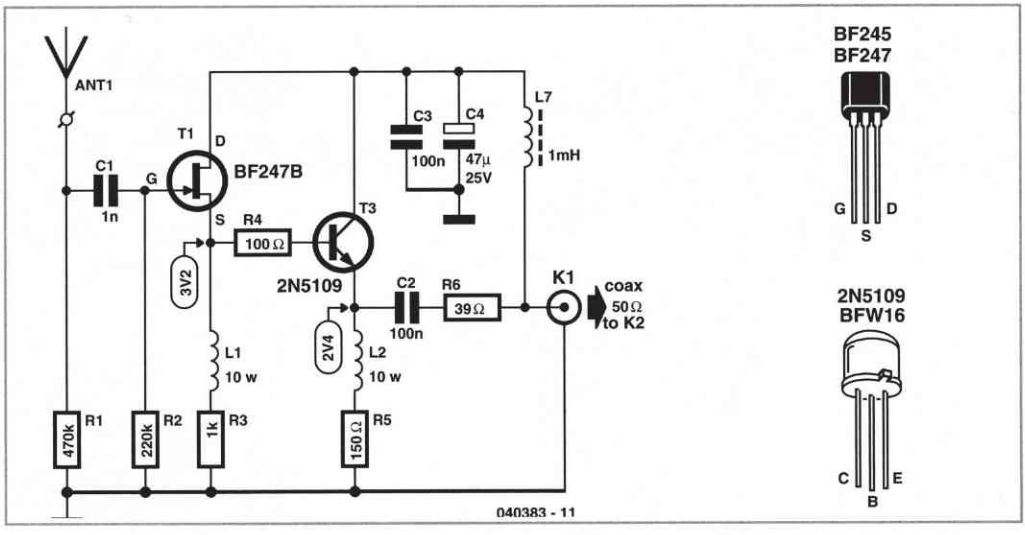

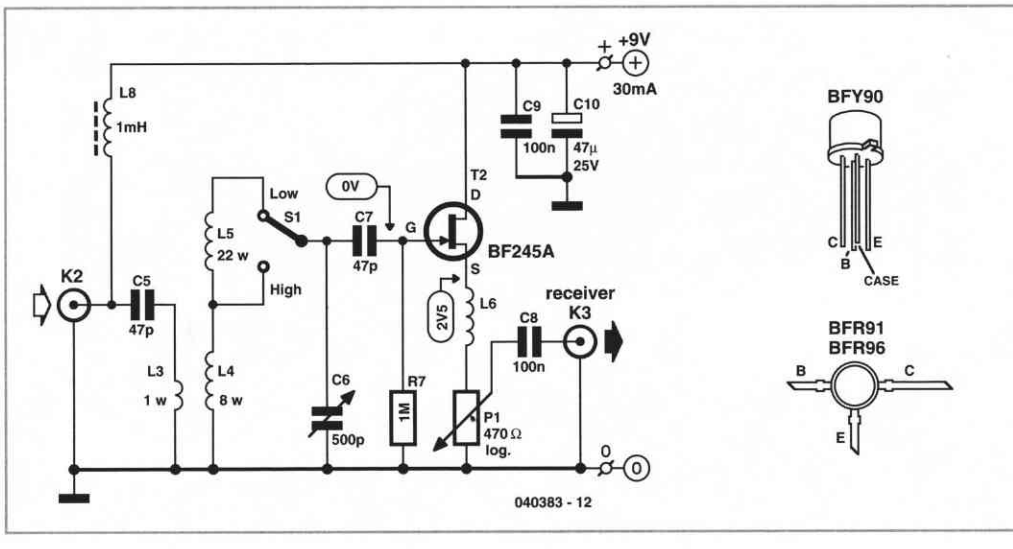

The active antenna is readily constructed with the aid of the two printed circuit boards shown.

Since we are concerned with only relatively low radio frequencies, the choice of components is not too crucial. Various types of FET may be used: BF245, BF246, BF256, or the SMD variants of these, but do mind their connections!

The same applies for the transistors: BFW16, BFY90, BFR91, BFR96; any of these will do.

A few hints for readers who conduct their own experiments. A lower value of capacitor C1 results in a somewhat looser coupling to the antenna, but also in lower signal strength.

It may be worthwhile to replace the capacitor with a variable type. Inductor L6 ensures that the output voltage at higher frequencies (30 MHz) is not much higher than at lower frequencies (3 MHz). This is because the Q factor of coils L4 and L5 increases at higher frequencies, which leads to higher amplitudes. This is compensated by L6. This inductor may be

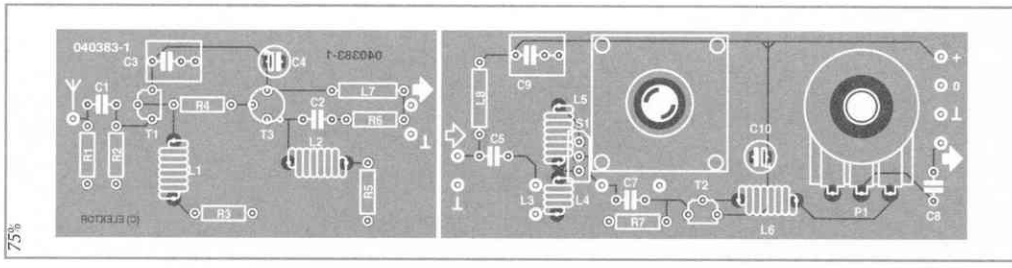

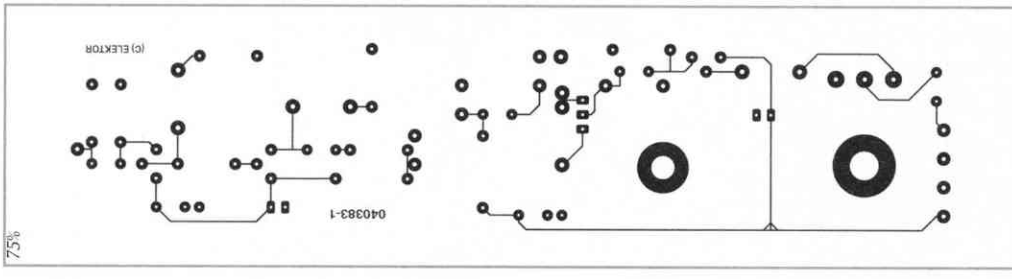

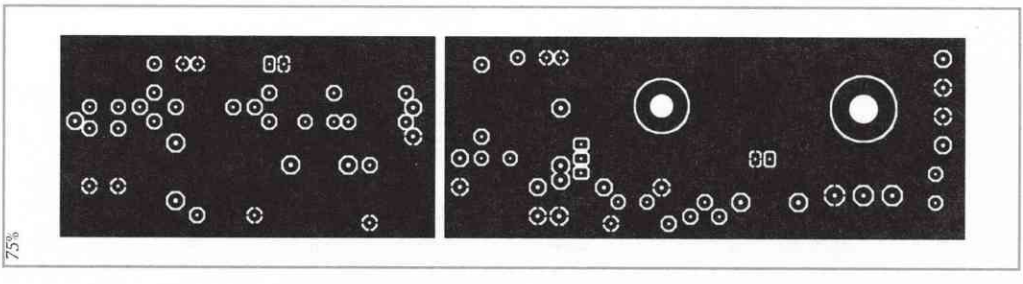

COMPONENTS LIST

Resistors
R1 = 470 kΩ
R2 = 220 kΩ
R3 = 1 kΩ
R4 = 100 Ω
R5 = 150 Ω
R6 = 39 Ω
R7 = 1 MΩ
P1 = 470 Ω logarithmic

Capacitors
C1 = 1 nF
C2, C3, C8, C9 = 100 nF
C4, C10 = 47 µF 25V radial
C5, C7 = 47 pF
C6 = 500 pF tuning capacitor

Inductors
L1, L2, L6 = 10 turns 0.7mm ECW, 4mm diameter (wind on 3.5mm drill bit)
L3 = 1 turn 0.7mm ECW, around L4
L4 = 8 turns 0.7mm ECW, 12mm diameter (wind on 10 mm drill bit)
L5 = 22 turns 0.7mm ECW, 12mm diameter (wind on 10mm drill bit)
L7, L8 = 1 mH miniature choke

Semiconductors
T1 = BF247B
T2 = BF245A
T3 = 2N5109

Miscellaneous
PCB, ref. 040383-1 from The PCBShop

omitted and replaced by a wire bridge, but then the output voltages at higher frequencies increases.

Aim at obtaining as tight a coupling as feasible between L4 and L5. Because of this, it is better to wind the two coils as one, that is, 30 turns with a tap than to wind two separate coils (see photograph).

(040383-1)

063 Put that Light Out!

HOME AND GARDEN

Stefan Hoffmann

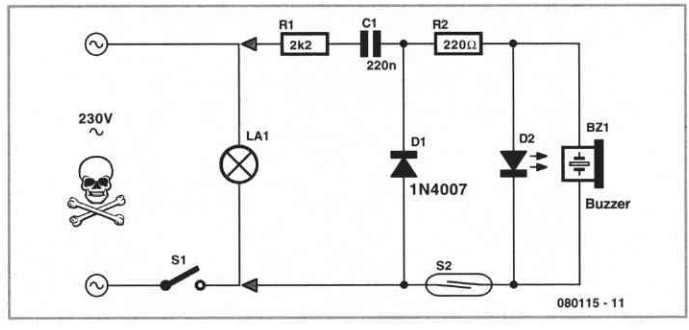

If you forget to switch off the light after leaving a seldom used room (such as the loft), there's a strong likelihood that it could remain lit for months, running up an expensive power bill in the process. How can we prevent this waste?

It's not hard for electronics enthusiasts to design a little circuit to mitigate the effects of absentmindedness. The notion is simple; if the light is left on when the hatch or door is closed, a rhythmic sounder/buzzer signal produces an alarm that hopefully will not be masked by other noise.

The circuit is powered as long as the lamp bulb is switched on by light switch S1. If the reed switch S2 then signals that the hatch has been closed, the sounder operates. The red LED, mounted outside the loft next to the entry hatch, also indicates that the lamp up there needs to be switched off. The circuit does not use a transformer, meaning that the whole circuit is at mains potential. For this reason the components must be placed inside an insulated plastic case for protection, with no way that people can touch any part of the circuit (this includes the sounder).

The connecting wires to the LED and the reed switch contact must be fully protected to the same touch-proof degree too. For the sounder you can use any type that operates on direct current in the region between 1 V and 3 V. In this circuit the operating voltage is limited by the LED connected in parallel to the buzzer. Using a red LED will provide around 1.7 V to the sounder. The current requirement of this kind of miniature sounder is about 5 mA.

stefankhoffmann@yahoo.de (080115-I)

064 Eight-channel Scope Input

TEST AND MEASUREMENT

H. Steffes

Two channels are usually sufficient to perform the majority of circuit measurements carried out at the test bench but sometimes it would be useful to be able to see what is going on in more than two places simultaneously. The price of multichannel oscilloscopes however dictates that these are for professional users only. The circuit described here shows that with a little ingenuity it is perfectly possible to expand the numbers of input channels to eight. The circuit has been designed with simplicity in mind and can only be used for viewing digital waveforms.

There are two basic blocks to the circuit diagram; an N to 1 multiplexer and a staircase

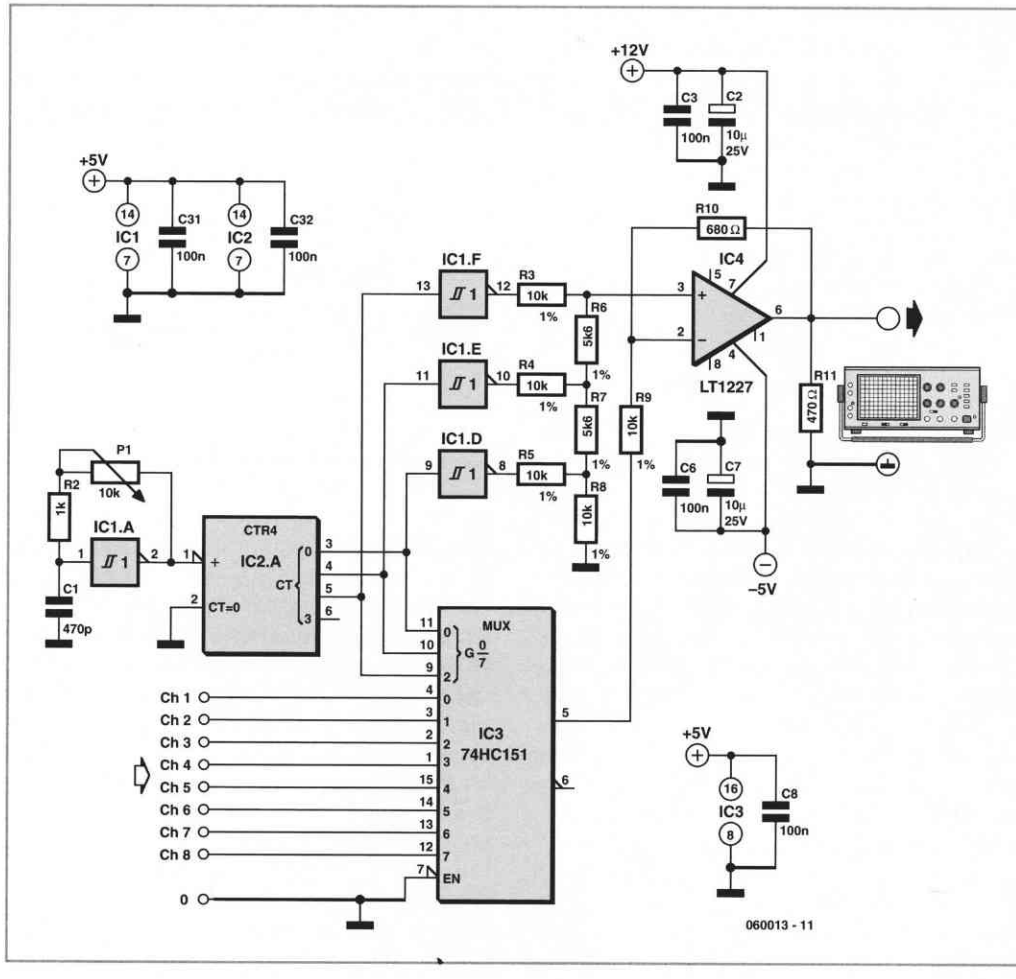

waveform generator with N output level steps. All the common logic families contain a multiplexer chip in their ranks and the type 74HCT151 (IC3) used in this design is a low-cost eight to one multiplexer which switches any one of the eight input signals through to the common output. If this output was displayed on an oscilloscope the screen would show all eight signals superimposed on each other so it is necessary to separate them vertically. This output signal is therefore mixed with the output of a staircase waveform generator which switches in time with the channel multiplex signal so that each channel is displayed as a different horizontal trace on the screen. Providing the staircase waveform remains in synchronism with the channel multiplexing, each of the eight inputs will be redrawn in the same position one above the other on the screen.

The display is useful for analysing the timing behaviour of simple digital circuits and its eight bit wide input is ideal for monitoring the data bus and input/output ports of a low-speed microprocessor system. The circuit actually is useful as a rudimentary logic analyser for digital circuits using slow clock speeds.

The staircase waveform is generated by an R/2R type of resistor network (R3 to R8) driven by the three binary coded outputs of the counter which also switch the multiplexer (IC3). The multiplexer output signal and stair-

case waveform are now mixed at the inputs of the fast opamp IC4. The oscillator frequency can be adjusted by P1 from 100 kHz to approximately 1.8 MHz. This allows adjustment of the multiplex frequency to suit the type of signal under measurement.

With a switching frequency in the order of 2 MHz it is necessary to display the eight channel outputs on an oscilloscope which has a minimum input bandwidth of around 20 MHz.

(060013-1)

065 Simple USB AVR-ISP Compatible Programmer

MICROCONTROLLERS

Nand Eeckhout

Modern PCs rarely have a serial or parallel port any more, to the great regret of anyone who experiments with microcontrollers every now and then. In the old days it was very simple to use the parallel port of a standard PC and program just about any type of AVR microcontroller with it. When you want to do that now, you're first obliged to buy a programmer that communicates with the PC via USB, which immediately raises the threshold of getting started with these microcontrollers. The circuit presented here offers a solution to this.

As you can see from the schematic, this is a very simple circuit, built around a cheap, standard AVR microcontroller plus a handful of passive components. You may have already

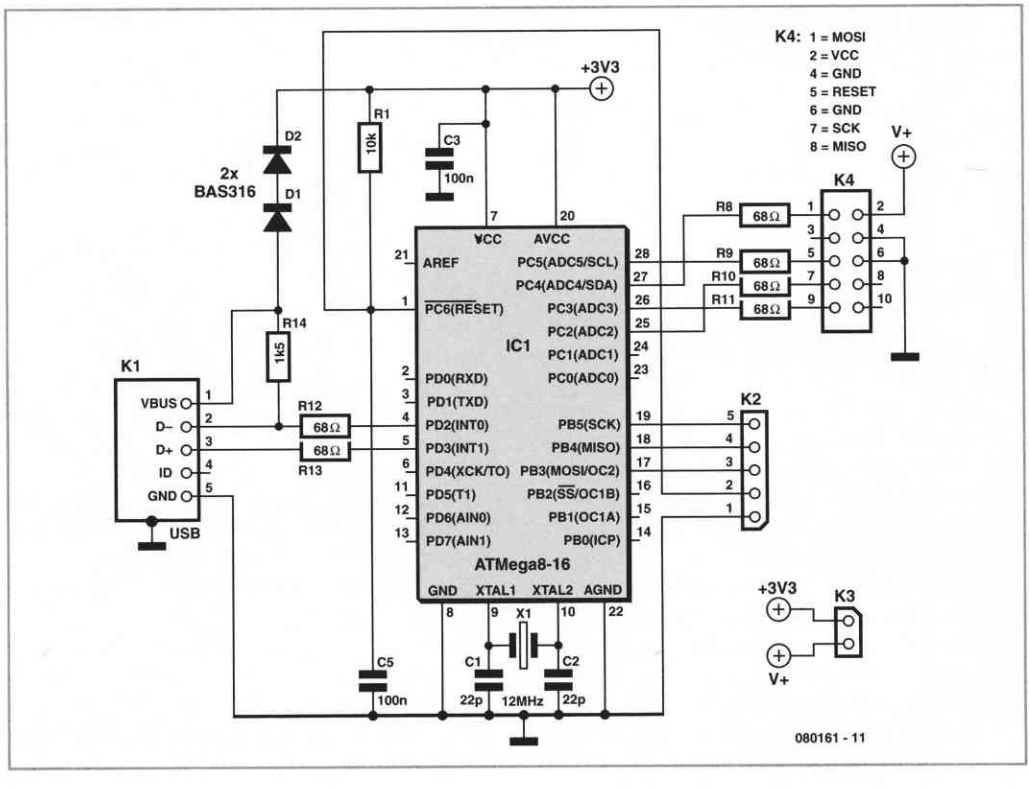

observed that this microcontroller does not have a USB interface and the circuit does not use a USB to serial converter either. The strength of this circuit is found in the firmware. The USB interface has been implemented in software, as we have shown in an earlier article 'AVR drives USB' in the March 2007 issue of Elektor. The firmware ensures that the circuit is recognised by the PC as a serial port and communicates with AVR Studio, the standard Atmel development environment, as if it were a 'real' AVR-ISP programmer.
The circuit is easily built on a small piece of prototyping board or even on a breadboard, since the controller is available in a DIP-28 package. If you are going to program the controller yourself (via connector K2) then make sure that you set the configuration fuses so that the internal oscillator uses the external crystal as the clock source.

Jumper K3 is provided in the event you would like to power the circuit to be programmed from the USB port. We do not recommend that you do this, however, but sometimes there is no other option. K4 is a 10-way box header which has the same standard pinout that Atmel uses everywhere.

(080161-I)

066 Hard Disk Switch

COMPUTERS AND INTERNET

Uwe Kardel

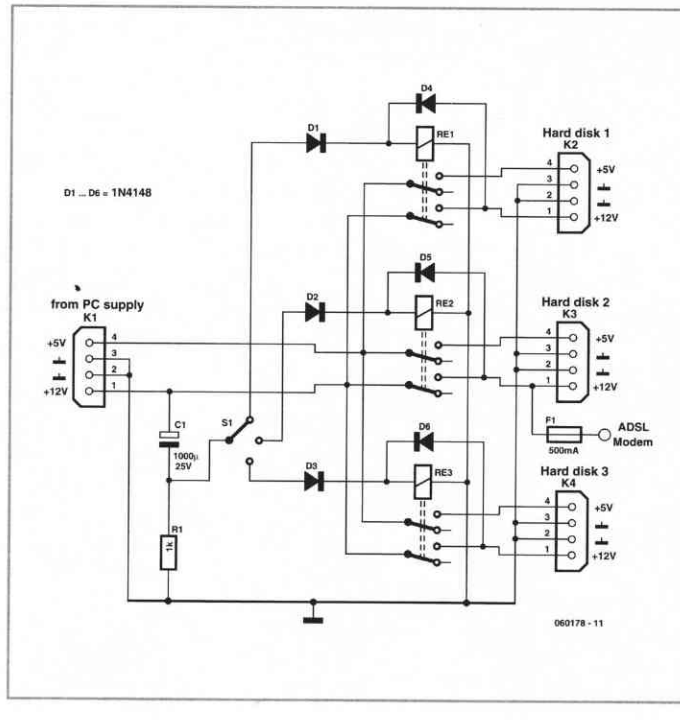

In these times with viruses and other threats from the Internet it would be nice to have reassurance that the PC cannot be infected. That is why this circuit was designed. It makes it possible to install multiple hard disks inside the case of a PC, which are separated in such a way that viruses cannot move from one disk to another.

In this case there are three drives installed, one for use of the Internet via ADSL, one for working with email and one for other applications. If data from the Internet never arrives on the third disk, it is effectively protected against viruses. The solution outlined here has been in satisfactory use for a couple of years. There is an additional benefit: if there are ever any problems with the operation of the computer, then it is very easy to change to another hard disk to check if the problem

manifests itself there as well. In this case, fault finding can be made much easier.

The circuit operates by only switching over the power supply voltages (5 V and 12 V) of the hard disks. The hard disk is out of service without a power supply. This works without a problem with S-ATA disks. With IDE disks this only works with modern drives. There may only be a combination of hard disks on the relevant port and no CD-ROM, DVD-drive, CD-burner or something similar.
The selection of the desired hard disk is done with a rotary switch. This has to be set to the correct position before the computer is switched on. When the power supply is turned on, one of three relays is driven via diode D1, D2 or D3. The relays are provided with a hold circuit via a second diode (D4, D5 and D6). In this way the selected relay remains energised as long as the power supply voltage is present. After switching on, electrolytic capacitor C1 is charged via R1, so that the common contact of the rotary switch is quickly at 0 V. This prevents an accidental change of hard disk while the computer is in operation.

The ADSL modem is powered from the PC. This power supply voltage is only present if hard disk number 2 is selected. This prevents the use of the Internet if one of the other disks is selected.

(060178-1)

067 Solar Powered Battery Charger

POWER SUPPLIES, BATTERIES AND CHARGERS

C. Tavernier

Long before the current fashion for sustainable development caused solar panels to blossom on roofs and terraces in non sun drenched areas of the world, numerous nomadic and Route 66 users were already using them on motor-homes or pleasure craft. In these situations, the primary rôle of a solar panel is not to sell power back to the local electricity board or utility, but to charge an array of batteries in our on the vehicle or craft to provide a source of electricity after dark.
Even though such an operation might appear trivial, all the more so if you look at certain 'charger' circuits, it really is nothing of the sort, if you're keen to look after your batteries. Even though it does work, the solution of wiring batteries, supplied load, and solar panels in parallel is far from being satisfactory in at least two situations, which we'll discuss below.

When the load powered by the batteries consumes little or nothing at all, and the batteries are already well charged, and it's also a sunny day, the batteries are in serious danger of being over-charged, which as everyone knows will severely shorten their life — and possibly your travelling distance.
On the other hand, when the load powered by the batteries is drawing a lot of current and there is little or no sun, the batteries can end up completely discharged, which as it may turn out is just as detrimental to their life as over-charging.

Yet it takes only a handful of components to build our intelligent regulator, the circuit of which is given in **Figure 1** (next page). It uses a PIC 12C671 microcontroller, which has the double advantage of being housed in an 8-pin DIL package and containing a multiinput analogue/digital converter (DAC).

Potential divider R6-P2-R7 feeds a discrete voltage level to AN0 to set the battery voltage at which charging should be stopped, to prevent any risk of over-charging. Potential divider R8-P1 and R5, feeding PIC analogue input line AN1, this time defines the battery voltage below which the load should be dis-

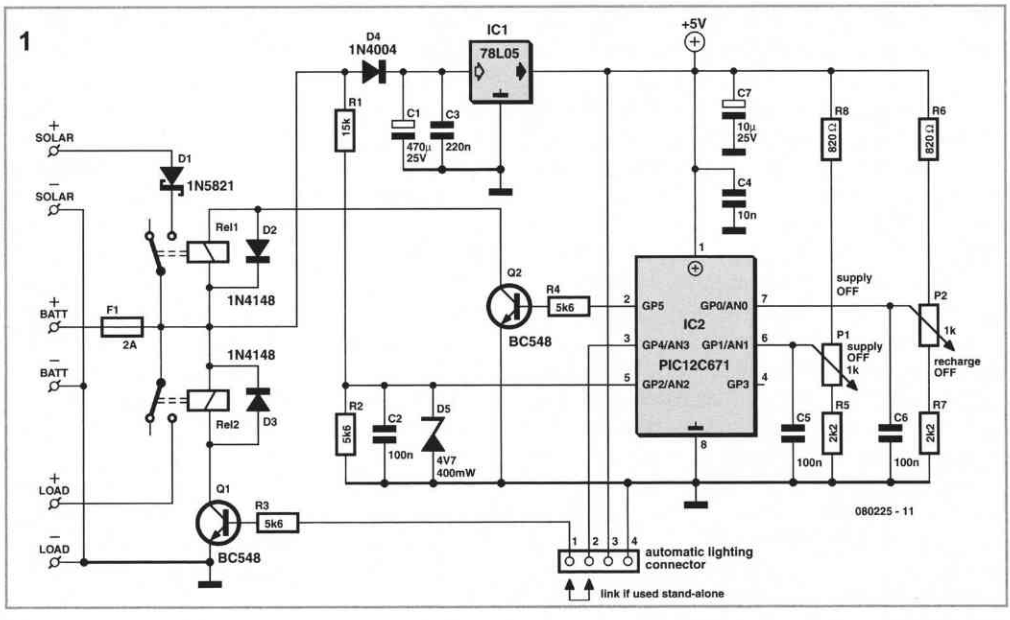

connected to avoid excessive discharge. In this way, a voltage window is created for the PIC to maintain in the interest of the battery's health and lifetime — and your peace of mind, of course.

The voltage present at the battery terminals is measured via the potential divider – fixed this time – R1 and R2, feeding PIC port line AN2. Zener diode D5 protects the microcontroller from any spurious external voltage that might appear on the terminals of the solar panels – during thunderstorms, for example.

Depending on the above mentioned voltage thresholds, the circuit controls relays Re1 and Re2, via transistors T1 and T2. The first is used to connect the

COMPONENTS LIST

Resistors
R1 = 15 kΩ
R2-R4 = 5kΩ6
R5, R7 = 2kΩ2
R6, R8 = 820 Ω
P1, P2 = 1 kΩ potentiometer

Capacitors
C1 = 470 µF 25V
C2, C5, C6 = 100 nF
C3 = 220 nF
C4 = 10 nF
C7 = 10 µF 25 V

Semiconductors
D1= 1N5821
D2,D3 = 1N4148
D4 = 1N4004
D5 = zener diode 4V7 400mW
Q1,Q2 = BC548
IC1 = 78L05
IC2 = PIC12C671, programmed, see Downloads

Miscellaneous
Rel1, Rel2 = relay, 10A contact
F1 = fuse, 2A
4-way SIL pinheader
6 PCB terminal blocks, 5mm lead pitch
PCB, ref. 080225-I from *www.thepcbshop.com*

2

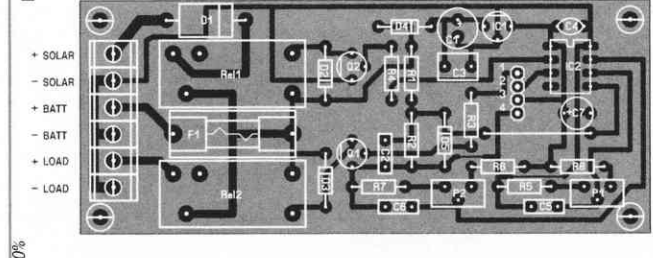

solar panels to the battery. Hence it is energized as long as the battery is not being overcharged, otherwise it is off. The second, T2, is used to connect the battery to the load being powered. So it is energized as long as the battery is not too deeply discharged, otherwise it is off.

Diode D1, which must be a Schottky type to minimize the forward voltage drop, avoids the battery discharging through the solar panel in periods of weak sunshine. A normal silicon diode in this position will have a too high forward drop (about 0.6–0.7 V) to ensure optimum results hence is not recommended.
Note the 4-pin connector at the bottom of the circuit diagram. This allows the present charger to be connected to the Solar-powered Automatic Lighting Module described on page 212. If this module is not being used, all you need do is connect a jumper across pins 1 and 2, as indicated in the diagram.
To make this project easy to build, we've designed the PCB shown here. As usual, the copper track layout is contained in the free download available from the Elektor website. This PCB has been designed for 10 A Finder SPDT relays, which leaves plenty of freedom in terms of choice of panels and battery. When designing this charger, we planned for a maximum battery current of 2 A, as indicated by the fuse value given, but there's nothing – apart, perhaps, from your wallet, for the cost of the battery and solar panels – to stop you from going higher.

The .hex file to be programmed into the PIC 12C671 is available free to download on the Elektor server, as well as from the author's own website (see end of article). Once built, the project is elementary to adjust, and only requires a DC voltmeter and an adjustable PSU, even a very simple one. Do not connect any of the external elements to the charger, and replace the battery by your stabilized PSU set to 12 V, with a voltmeter across it.

Then increase the voltage to 14.5 V and adjust P2 so that Rel1 just drops out. Then reduce this voltage to confirm that Rel1 is energized again at around 12.8–13 V (depending on component tolerances).
Continue to reduce the voltage down to 10.5 V and then adjust P1 so that Rel2 drops out. Increase the voltage again to check that Rel2 is energized again around 12 V or just under. P1 and P2 do not interact, so it is easy to adjust them independently.

Lock the wipers of P1 and P2 with a little sealant and fit your project into a case, taking care to protect it from damp if it is to be used outdoors. A sealed electrical junction box is ideal for this, at a ridiculously cheap price.

www.tavernier-c.com (080225-I)

Downloads
The source code and .hex files for this project are available for free from *www.elektor.com*, file #080225-11.zip.

The PCB design is available for free download from our website *www.elektor.com*, file #080225-1.zip

068 Thrifty LED Protector

MISCELLANEOUS ELECTRONICS AND DESIGN IDEAS

An LED is sure to fail if the current through it is too high. You will soon discover this after you have blown a few up. A simple resistor in series suffices to solve the problem and a better solution is almost inconceivable, because in this case you need only one additional cheap component. As the power supply voltage increases, an increasing amount of power is lost in the resistor. In particular with battery-powered equipment it is worthwhile

to make a power-saving version, which does require a few more parts however.
The circuit shown in the figure has deliberately been designed with parts that everyone will have lying around, except perhaps the small coil.
In nearly all modern switching power supplies there is an attempt to monitor the current. It is generally the case that components will fail if the current or power is too high and this is very effectively avoided with this technique. It works like this. Resistor R5 measures the current through the coil and T2 'watches' to make sure it doesn't become too large. L1 will never go into saturation, which could cause T3 to give up the ghost. As soon as the current through R5 increases to about 25 mA, T2 will conduct, T1 will block and T3 will also block. The current cannot flow through T3 any more and will look for another path, in this case through LED D1, which will now light up. By placing D1 in this position it acts in fact as a free-wheeling diode, which is good for the efficiency.
As soon as the current drops, T2 will block again and T3 will conduct. R6 provides a small amount of hysteresis so that the switching frequency of about 50 kHz does not become unnecessarily high (which would increase the loss).
The circuit works from about five volts, depending on the forward voltage of the LED. From about 9 V you will clearly notice the improvement in efficiency. The circuit is suitable for all types of LEDs, including the blue and white ones that need 3.5 V. The voltage that is generated by the coil will automatically adapt. The maximum power supply voltage is 24 V.
A little clarification regarding the choice of coil: the value is not critical, it could just as easily be 3.9 mH or 6.8 mH. Even 10 mH can be used, especially if the power supply voltage is greater than 9 V. The coil does need to be suitable for at least 25 mA. You can usually take a guess based on the physical dimensions of the coil. The coil will have to be at least 15 mm long and have a diameter of 7 mm.
Incidentally, there have been great advances regarding coils in the least few years. Modern SMD-coils are much smaller and can nevertheless handle high currents. Unfortunately they are not usually available in alues over 1 mH.

(060128-1)

1

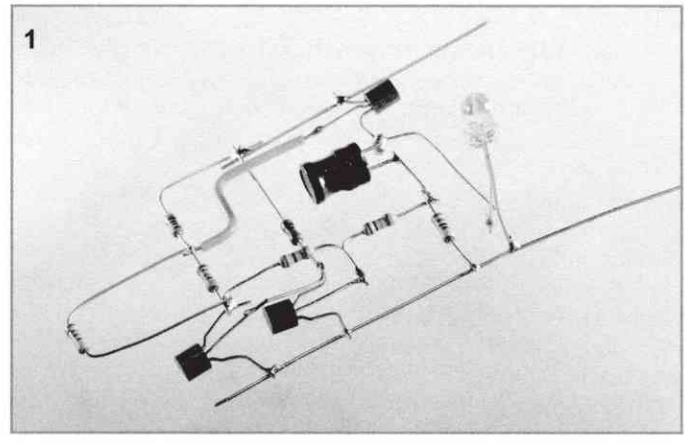

2

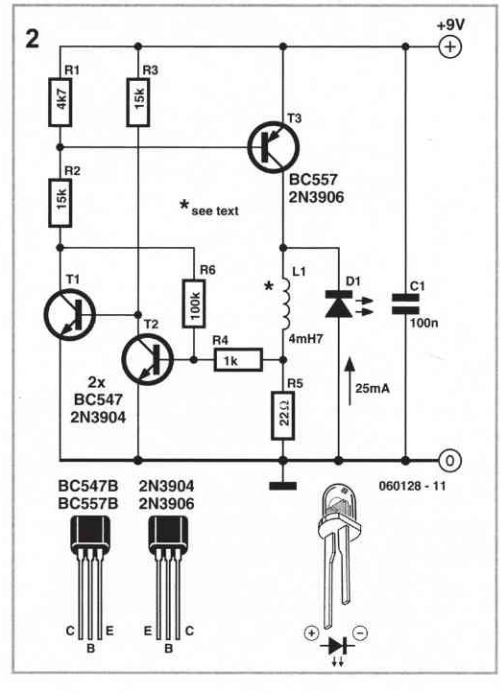

069 Stroboscope with Trigger Input

Bernd Oehlerking

The Conrad Electronics company has a light flash stroboscope kit in its product line (number 580406) which can be easily expanded with an electrically isolated trigger input.

Figure 1 shows the original schematic for the stroboscope. The neon lamp shown in the circuit (and which is used to provide a regular triggering of the flash tube) is removed and the additional circuit shown in **Figure 2** is connected to the points labelled 'A', 'B' and 'C'.

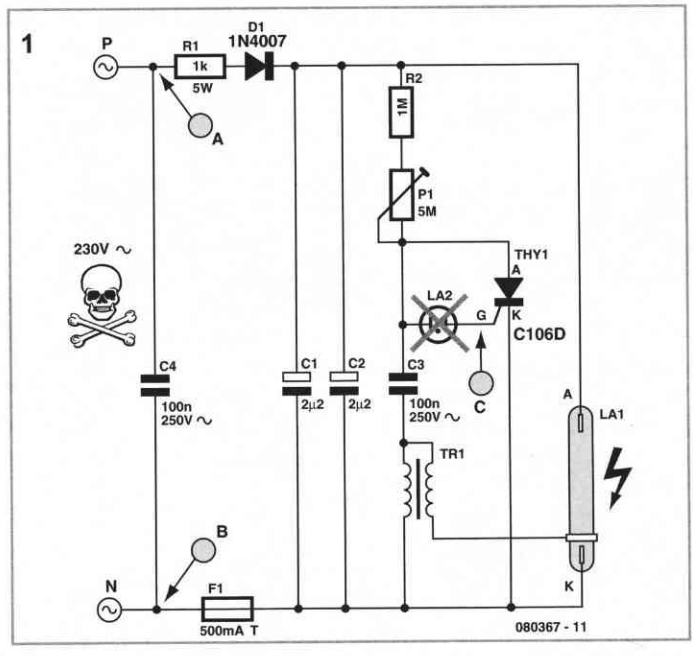

In this way a flash circuit is created that can be activated with an external trigger signal. The thyristor on the stroboscope PCB (a C106D from ON Semiconductor) requires only 400 μA to be triggered. Via voltage divider R1-R2-R3, diode D1 and electrolytic capacitor C1, a DC voltage of about 8 V is generated from the incoming mains voltage and, with the values shown, can deliver a current of about 1 mA.

This voltage is used to supply the trigger pulse (in practice the duration is about 100 μs) via the transistor in the optocoupler and voltage divider R4/R5.

The trigger signal for the LED in the optocoupler is presented via C2/R6 and R7. Diode D2 is connected in anti-parallel with the LED in the optocoupler to protect this LED from an external trigger signal with the wrong polarity. The differential network at the input (C2/R7) ensures that even if there is

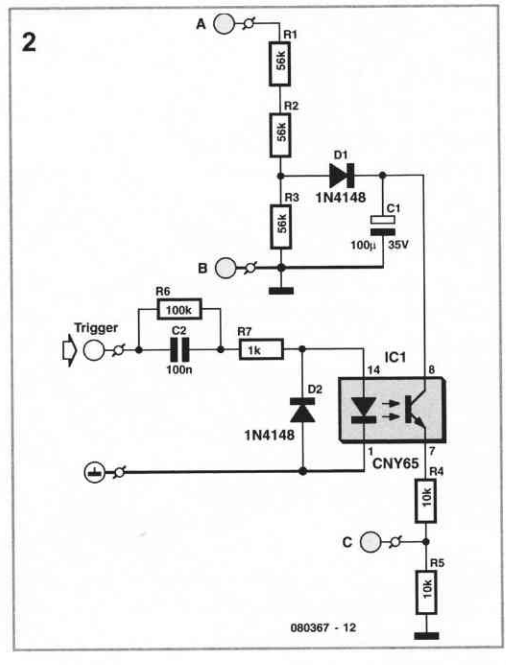

a long duration input pulse there is nevertheless only a short pulse sent to the gate. R6 is necessary for the periodic discharge of C2. A standard 5 V digital signal is sufficient for driving this trigger input.

With this expansion circuit it is possible to reach a repetition frequency of more than 20 Hz. Above this frequency the flash tube starts to flash erratically.

The optocoupler used is a CNY65, which easily provides class II isolation (generous space between the connections to the LED on the one side and the transistor on the other side).
Please note: this circuit operates at high voltages that can be lethal. Even after the mains voltage is removed there may still be dangerously high voltages present across the electrolytic capacitors in the circuit!

(080367-I)

070 Laser Alarm

HOME AND GARDEN

Dimitris Kouzis-Loukas

This circuit is a laser alarm system like the one we see in various movies. It uses a laser pointer beam to secure your valuables and property. Essentially, when the beam gets interrupted by a person, animal or object, the resistance of a photodiode will increase and an alarm will be activated.

The laser and the receiver can be fitted in same box, sharing a common power supply. As the receiver draws less than 10 mA on average, you'll soon find that the laser is the most current hungry device! Mirrors are used to direct the beam in whatever setup you require. Examples of a passage and an area protected by the alarm are shown in the diagram.

In the circuit diagram we find a TL072 op-amp (IC1.A) configured as voltage com-

1

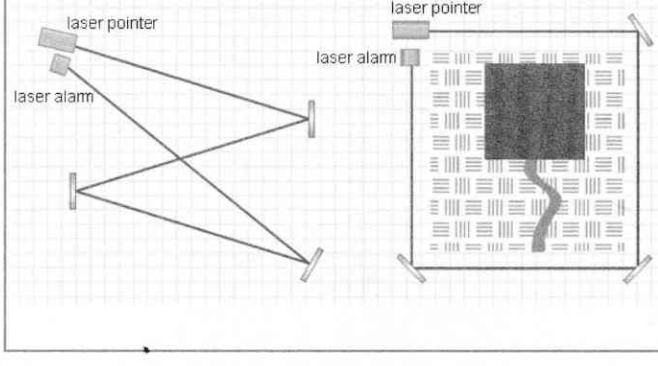

2

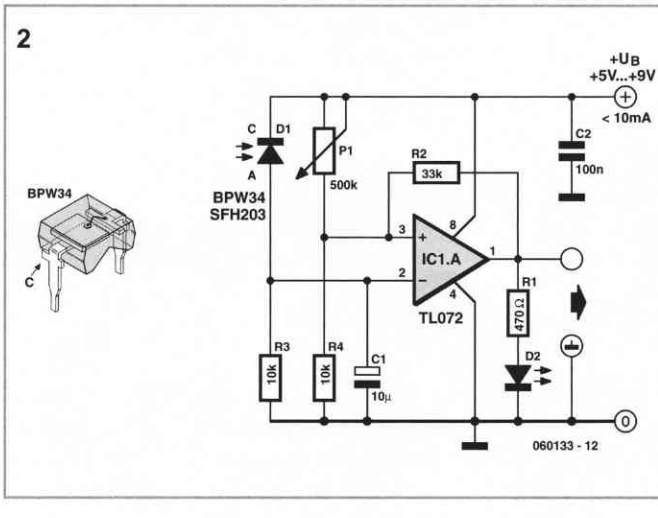

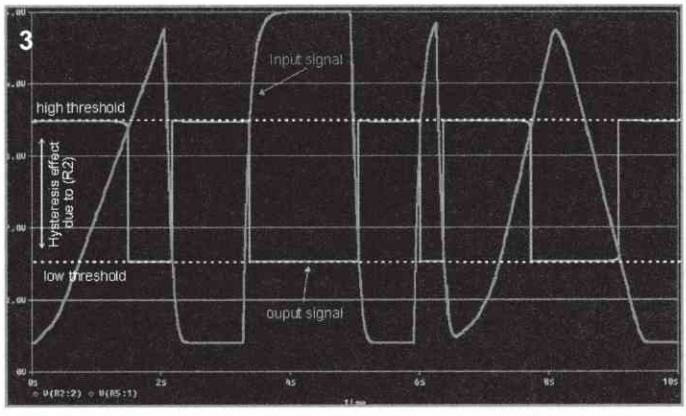

parator between the voltage reference provided by the adjustable voltage divider P1/R4 and the light-dependent voltage provided by the voltage divider consisting of photodiode D1 and fixed resistor R3.

When the laser beam is interrupted, the voltage on comparator pin 2 drops below that at pin 3, causing the output to swing to (almost) the positive supply voltage and indicating an alarm condition. This signal can drive a siren, a computer or a light that hopefully will deter the intruder. Alternatively it can be used to 'silently' trigger a more sophisticated alarm.

Resistor R2 provides some hysteresis to prevent oscillation when the two comparator input voltages are almost equal. Capacitor C1 makes the circuit immune to short, accidental interruptions of the beam, e.g., by flying insects. If you want your circuit to have faster responses you can reduce its value to 1 μF.

The operation of the circuit is illustrated by the waveform diagram, which also proves the hysteresis action that sets an upper and a lower threshold on the input voltage. You can also see the delay introduced by capacitor C1.

The circuit is simple and could be assembled on a piece of breadboard. After assembling the circuit and testing it, you should mount it in a black box that has just a small hole. You may decide to put the laser in the same box but only if you are sure there is no way the photodiode can 'see' the laser beam directly. The small hole should be filled with a black drinking straw so that only light from the direction of the laser beam can enter.

With the appropriate setup of the box and the mirrors, the laser beam is so intense that even direct sunlight cannot affect the operation of the photodiode.

(060133-1)

Warning
All safety precautions supplied with the laser you are using must be observed. Laser power should be kept as low as possible.

071 Active Rectifier

TEST AND MEASUREMENT

Dr. Thomas Scherer

Diodes make admirable rectifiers and are simple and economical, but unfortunately they also exhibit forward voltage drop, and hence also power loss.

The losses in ordinary silicon diodes are of the order of 0.7 W/A to 1 W/A, and for Schottky diodes the losses are in the region of 0.4 W/A to 0.5 W/A. In a bridge rectifier these losses are doubled, as the current path is always through two diodes in series.

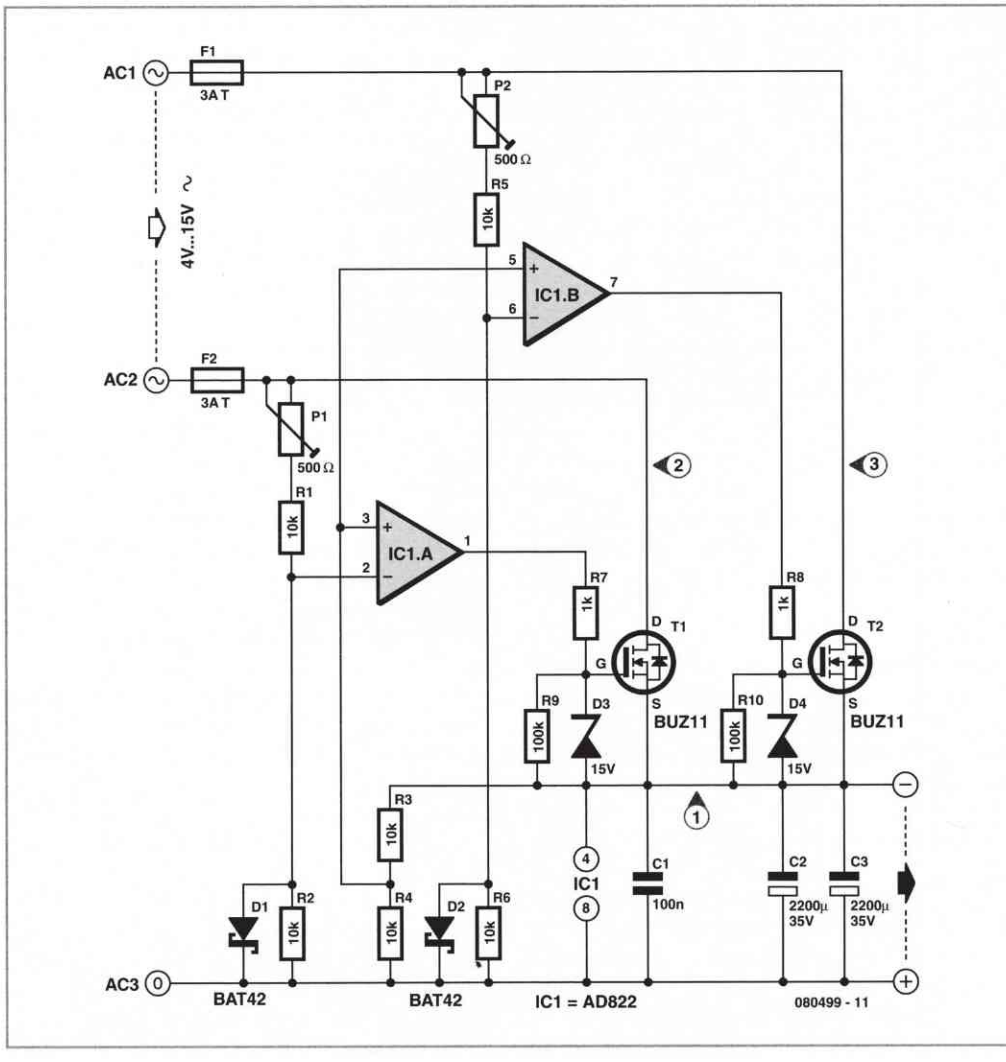

These considerations led to the development by Wolfgang Schubert two years ago of an active rectifier using suitably-driven power MOSFETs, published on page 232 of this book. The circuit was highly symmetrical, consisting of a quad opamp and four MOSFETs, forming a bridge rectifier with a very low voltage drop.

However, reports in the Elektor online forum indicated that some people had experienced problems with the circuit. Curiosity aroused, the author was prompted to look more closely at the design, and so he built a version in order to test it more thoroughly. It appeared that the outputs of the TL084 did not always swing close enough to the positive and negative rails to switch the FETs off fully. Time for some modifications.

The first thought was, why not use a transformer with a centre tap on its secondary winding? Then we only need to simulate the action of two diodes, reducing circuit complexity and cost, as well as power losses, by nearly a factor of two. It also means that we do not have to find complementary p-channel FETs.

The second thought was, instead of using 1 % resistors, why not use two trimmer potentiometers and allow an adjustment to find the optimal switching voltages for the pseudo-diodes?

The result of these considerations was the circuit shown here, which roughly resembles one half of the original design. AC1 and AC3 are connected to either end of the secondary winding of the mains transformer, and AC2 is connected to its centre tap. Each half of the dual opamp drives its own power MOSFET. When power is first applied the reservoir capacitors are both discharged, and the parasitic diodes present in each MOSFET are put to positive use: through them the capacitors are initially charged to provide power for the opamp. Usually the circuit will be in normal operation after the first half-cycle of the mains.

Let us suppose for illustration that the input is connected to a transformer with two 12 V secondaries and a power rating of 50 VA, and that at the output of the circuit we connect a load of approximately 5 Ω.

Roughly speaking we would expect a rectified output voltage of approximately 15 V and an output current in the region of 3 A. The voltage divider formed by R3 and R4 will provide a reference voltage of 7.5 V.

Every 10 ms there will be a negative voltage peak either on AC1 or on AC3. If the voltage at the junction of R1 and R2 or at the junction of R5 and R6 is less than the 7.5 V reference, the output of the corresponding opamp will go high and the connected MOSFET will be turned on. P1 and P2 allow the point where the MOSFETs are turned on to be set individually in terms of the voltage difference between input and output. These voltages can be measured using an oscilloscope (a multimeter will not do the job!) between test points 1 and 2 and between test points 1 and 3.

With the component values given the threshold voltage can be set in the range 0 V to 375 mV in our example. In practice, with a 3 A load and using BUZ11 MOSFETs, a suitable threshold voltage is between 50 mV and 100 mV. Power losses in the MOSFETs are only around 150 mW to 300 mW and so the devices do not need extra cooling. The potentiometers should not be set so that the MOSFETs conduct for longer than necessary, as this leads to brief short circuits of the input, audible as a humming of the transformer. It is best to start with the potentiometers adjusted to the centre of their travel.

D1 and D2 ensure that the inputs to the opamps never see excessive voltages of the wrong polarity. D3 and D4 protect the gates of the power MOSFETs.

With the components shown the active rectifier is suitable for output currents of up to around 5 A. The maximum transformer voltage is 15 V and so the output voltage is limited to about 20 V under load. With no load, a nominally 18 V transformer with poor regula-

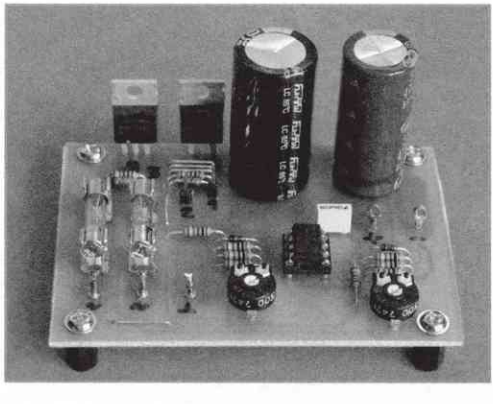

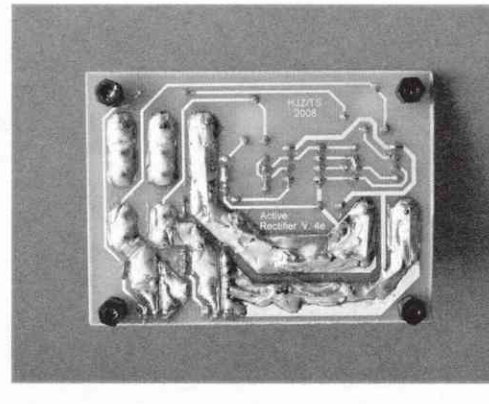

tion can give rise to DC voltages of over 32 V, exceeding IC1's maximum rating. Lower-impedance toroidal transformers with secondaries rated at up to 20 V (corresponding to 27 V at the output under load) work fine. The reservoir capacitors should be rated at at least twice the secondary voltage of the transformer. If more current is required (as is quite likely, since the circuit is designed for operation at low voltages) higher-power (lower 'on' resistance) FETs and larger smoothing capacitors are needed. Using the IRFZ48N and two 4700 μF electrolytics up to 10 A can be delivered with minimal losses. With a small piece of aluminium as a heatsink the FETs barely get warm. The printed circuit board tracks need to be reinforced with soldered wire links, and 6.3 A slowblow fuses should be fitted for electrical safety.

Other dual opamp ICs besides the AD822 can be used. The author has also had good results using an original Texas Instruments TLC272. The outputs of this device can swing down to very nearly 0 V, which is essential in this circuit. Other suitable types include the OPA2244 and the better-known LM358N.

An Eagle layout file for the printed circuit board is available for free download from the Elektor website. The author would like to thank Hans-Jürgen Zons for his help in designing the printed circuit board.

(080499-I)

072 How to! connect your project to the PC

MICROCONTROLLERS

John Dobson

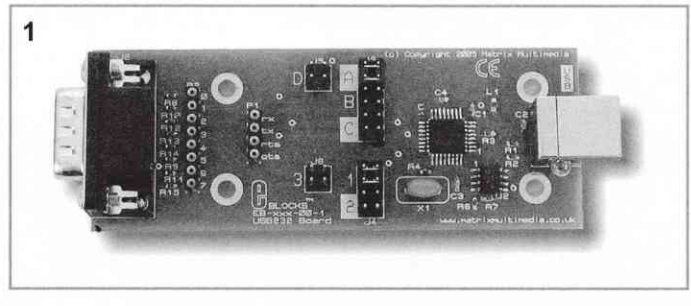

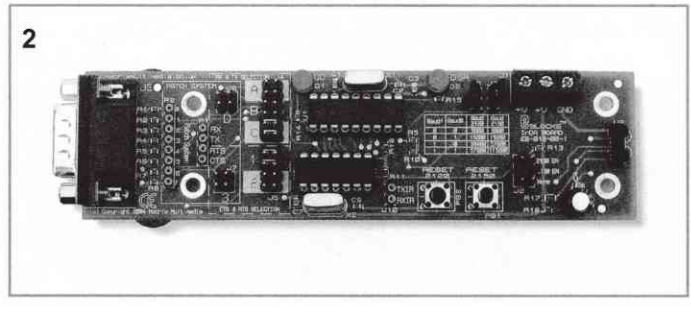

Connecting a project to your computer used to be a simple affair – your microcontroller would have a UART (Universal Asynchronous Receiver Transmitter) which was compatible with the RS232 protocol. You would then simply put a MAX232 converter chip onto the microcontroller and a 9-way D-type socket which linked your design using a standard lead directly to your PC.

From an application like Visual Basic, you could then communicate directly to your project using Windows COM routines. Alternatively, you used the parallel port and simply waggled individual pins using the old BASIC [outp] command. Then USB came along to make all our lives "easier". Due to the non-trivial coding required to tame the USB interface in microcontrollers having internal USB connectivity, alternative solutions have emerged – most notably the FTDI chip that

3

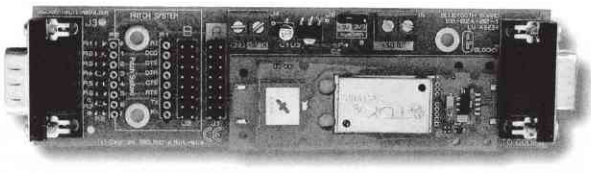

acts as an interface between RS232 and USB. You can see this solution on the E-blocks USB232 board in **Figure 1**.
The FTDI device takes care of all the tricky USB negotiation for you and provides a link between a TTL level UART interface on the microcontroller and the USB port on your PC. On the PC side you are supplied with a virtual COM port driver which you can drop into your Visual Basic application, providing compatibility with older programs that worked on the serial port. The FTDI devices also provide DLLs for faster noncom port compatible communication.
Almost all laptop PCs have an IrDA port. IrDA is an internationally defined standard for infrared communication that's used on laptops, mobile phones, and PDAs. Implementing the IrDA standard is as difficult as you want to make it: the infrared techniques at the basic physical layer are not that hard, but the actual coding and decoding of data is very complex. Fortunately Microchip offer an IrDA decoder chip or 'stack' which sits between the infrared transceiver and your microcontroller. What's more, an E-blocks module is available (**Figure 2**). On the PC side you will find that Windows has a native infrared COM driver which can be used by Visual Basic or your other development system. Bluetooth was originally specified to replace the cables round the back of your PC. The system has some great advantages: it is a wireless system with a range of up to about 100 meters, and transmission through walls. A number of off the shelf modules are available like the TDK one on the E-blocks Bluetooth module shown in **Figure 3**. This converts Bluetooth into a TTL compatible data stream which can interface directly with any old microcontroller UART. To transfer data or commands, you will need some understanding of the Bluetooth AT protocols. If your laptop does not have Bluetooth then it is possible to buy a low-cost PCMCIA compatible card, or a Bluetooth adaptor for the USB port.

The obvious choice for replacing the RS232 link between hardware projects and your PC would be USB – but this system is currently too complex to implement in a microcontroller. The FTDI drop-in chip will be the easiest choice for replacing the RS232 link, but designers should also consider alternative wireless/infrared solutions which present some significant advantages to the end user.

(065122-1)

E-blocks modules and associated software are available through the Elektor Shop, see *www.elektor.com*

073 Mobile Phone Data Cable = Interface Converter

COMPUTERS AND INTERNET

Michael Gaus

Nowadays microcontroller circuits that cannot be connected to a PC are hopelessly old-fashioned. One option is to use one of the many types of ready-made USB to serial interface converters to outfit a microcontroller circuit with a MAX232 level converter. However,

in some cases it is not so easy to retrofit a level converter if the circuit is already fitted in an enclosure. An example of this is provided by the various Internet routers that clever users employ for novel purposes (with modified firmware).

If you enjoy plying a soldering iron, you can keep everything simple and inexpensive. This is based on the fact that older-model mobile phones did not have any USB circuitry for connection to a PC. Special cables incorporating an interface converter were (and still are) available for these devices. They even included level conversion from RS232 to digital logic levels. What could be simpler than to use a data cable of this sort? After all, you can obtain these cables very inexpensively via the Web. Another advantage of these cables is that they supply +5 V from the PC, which can be used to power small circuits. The author has found that a cable with type number KQU08A, which was originally designed for use with Siemens C55 mobile phones, is quite suitable.

The 'remodelling' is very easy in principle: you just cut off the mobile-phone connector and solder a five-way socket header in its place. The photo shows that the author also used a small piece of perforated circuit board for improved mechanical strength. The pin assignments are easy: yellow = +5 V, red = ground, blue = RxD, white = TxD, and green = DCD, although the last signal can be ignored in most cases. You should always check the wiring scheme just to be sure.
Note that the RxD, TxD and DCD signals are designed for 3.3 V and are active low. If you

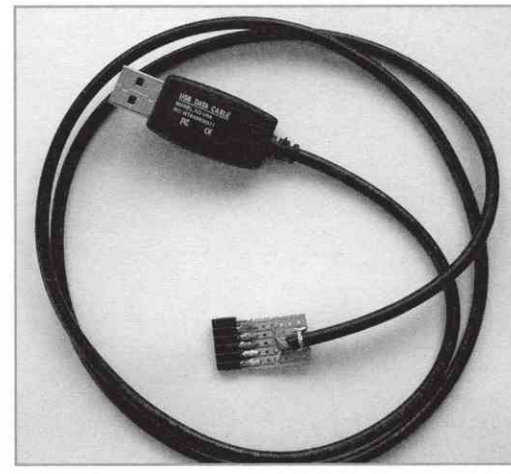

are driving a circuit with a 5-V supply voltage, no problems will arise if you connect the TxD line of the cable to the RxD input of a 5-V microcontroller, since the MCU will almost always interpret the signal levels correctly. However, you should connect the TxD output of the MCU to the RxD line of the cable via a voltage divider formed by a 1.8-kΩ resistor in series with a 3.3-kΩ resistor. You can also use a 3.3-V Zener diode in place of the 3.3-kΩ resistor. The load on the 5-V line should be kept at 100 mA or less.

Before you start modifying the cable, it's a good idea to connect it to a PC, install the included driver, and see whether a virtual COM port is configured on the PC for the cable. If this is OK, connect TxD and RxD together and check whether your terminal emulator program can properly receive transmitted data (without local echo enabled).

(080321-1)

074 High-voltage Regulator with Short Circuit Protection

POWER SUPPLIES, BATTERIES AND CHARGERS

Ton Giesberts

There are many circuits for low voltage regulators. For higher voltages, such as supplies for valve circuits, the situation is different. That's why we decided to design this simple regulator that can cope with these voltages. This circuit is obviously well suited for use in

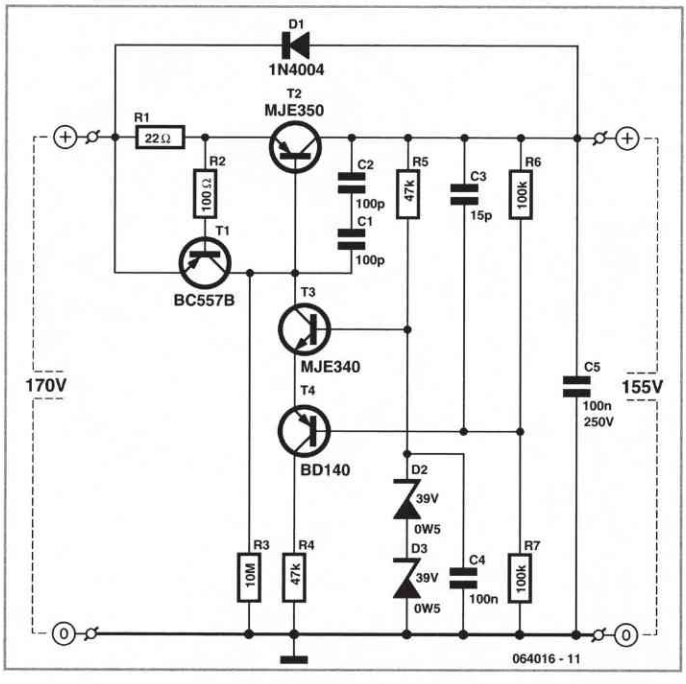

combination with the quad power supply for the hybrid amp (see page 23).

The actual regulator consists of just three transistors. A fourth has been added for the current limiting function. The circuit is a positive series regulator, using a pnp transistor (T2) to keep the voltage drop as low as possible.
The operation of the circuit is very straightforward. When the output voltage drops, T4 pulls the emitter of T3 lower. This drives T2 harder, which causes the output voltage to rise again. R4 restricts the base current of T2. C1 and C2 have been added to improve the stability of the circuit. These are connected in series so that the voltage across each capacitor at switch-on or during a short circuit doesn't become too large. You should use capacitors rated for at least 100 V for C1-C3. D1 protects T2 against negative voltages that may occur when the input is short-circuited or when large capacitors are connected to the output.

We use two zener diodes of 39 V connected in series for the reference voltage, giving 78 V to the base of T3. Because R6 is equal to R7 the output voltage will be twice as large, which is about 155 V. T4 acts as a buffer for potential divider R6/R7, which means we can use higher values for these resistors and that the voltage is not affected by the base current of T2 (this current is about the same as the emitter current of T3). This is obviously not a temperature compensated circuit, but for this purpose it is good enough.

The current limiting section built around T1 couldn't be simpler. When the output current rises above 30 mA the voltage across R1 causes T1 to conduct. T1 then limits the base-emitter voltage of T2. R2 is required to protect T1 against extremely fast peak voltages across R1. R3 is needed to start the regulator. Without R3 there wouldn't be a voltage at the output and hence there wouldn't be a base current in T2. R3 lets T2 conduct a little bit, which is sufficient for the regulator to reach its intended state.

During normal operation with a voltage drop of 15 V across T2 and a current of about 30 mA there is no need for extra cooling of T2. The junction temperature is then 70 °C, which means you can burn your fingers if you're not careful!

The lower the input voltage is, the more current can be supplied by this regulator. This current is determined by the SOAR (Safe Operation ARea) of T2. During a short circuit and an input voltage of 140 V the current is about 30 mA and T2 certainly requires a heatsink of at least 10 K/W in those conditions.
To increase the output voltage you should use a larger value for R6. If you want to use a higher reference voltage, you should replace T4 with a MJE350. If you only ever need to

draw a few milli-amps there is no need to include T4 and R4. The potential divider (R6/R7) can then be connected directly to the emitter of T3. The ripple suppression of the circuit is about 50 dB. The quiescent current is 2.5 mA and for small currents the dropout voltage is only 1.5 V.

(064016-1)

075 Multimeter as Lightning detector

TEST AND MEASUREMENT

Karel Walraven



Most digital multimeters have a sensitivity of 200 mV and in input impedance of 10 MΩ. With this information you can calculate that at full scale there will be a current of 20 nA (nano-ampères). In reality you have a very sensitive ammeter in your hand.
Now that we know this, it becomes a mission to do something with that knowledge. In other words, here is a solution that requires a problem... For example, try the following:

Connect the 'COM' of the voltmeter to ground (safety earth from a power point, central heating, plumbing, etc.). Connect an old bicycle wheel spoke or a length of thin copper wire to the 'V' socket so that you get a kind of antenna. When you place this impressive looking apparatus on a windowsill during a thunderstorm and set the meter to the 200 mV range, you will, with a bit of luck, see nice deflections during lightning strikes. A nice thing is that you will see a build-up of static charge long before the flash, and immediately after the lightning flash the charge is gone. Be aware of your own safety and those of others: Don't walk outside with the thing or surreptitiously lead the 'antenna' to the outside. This is really dangerous. In these modern times people still die from lightning strikes!
According to theory it is possible to improve the lightning detector somewhat. A sharp point or edge collects more than a rounded one. You probably have a razor blade somewhere. Attach this razor blade at the top of the antenna. And again, be careful: keep children and pets away. In the picture you can see an assembly were the top of the antenna has one turn. The razor blade is clamped in this and in addition it is a lot harder to injure yourself this way.
The 'reception' can be improved a lot more by ionising the air in the region of the antenna with the aid of radioactivity. Most of the mantles used in gas and petroleum lamps contain a small amount of radioactive material and also smoke detectors that work with an ionisation chamber are (lightly) radioactive. It is better to leave the smoke detectors alone, because they often contain very poisonous substances, but a piece of lamp mantle could be secured to the razor blade with some two-component epoxy glue.

(064015-1)

076 Auto-off for Audio Gear

AUDIO, VIDEO AND PHOTOGRAPHY

Joseph Zamnit

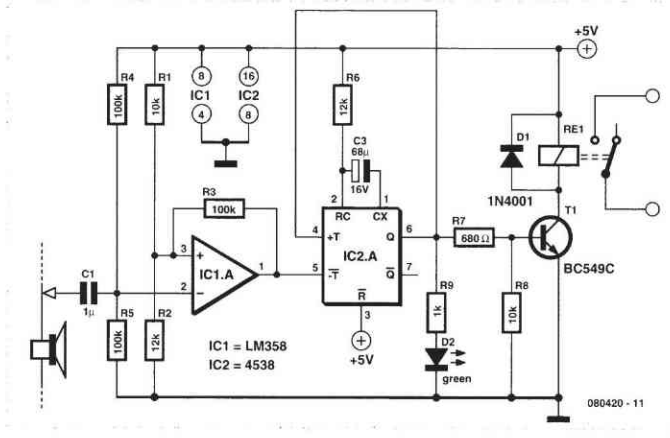

A good way to spend a relaxing afternoon is to be in a quiet place with just the right amount of sun or shade, drinks within reach and listening to your favourite songs on MP3 or CD. You doze off and by the time you wake up again the audio equipment has dropped silent due to flat batteries. What a pity!
The simple circuit shown can prevent this embarrassing situation by de-actuating a relay when no audio signal is detected for about two seconds.

The circuit consists of a sensitive LM358 based comparator, IC1A, which keeps monostable IC2A (a 4538) triggered as long as an audio signal is detected at the input. Via coupling capacitor C1 the circuit takes its input signal from the 'hot' side of the loudspeaker or headphones in your audio gear. The monostable will time out 2 s after being triggered, the delay being determined by R6 and C3.

(080420-I)

077 Simple Capacitive Touch Sensor

MISCELLANEOUS ELECTRONICS AND DESIGN IDEAS

Wim Abuys

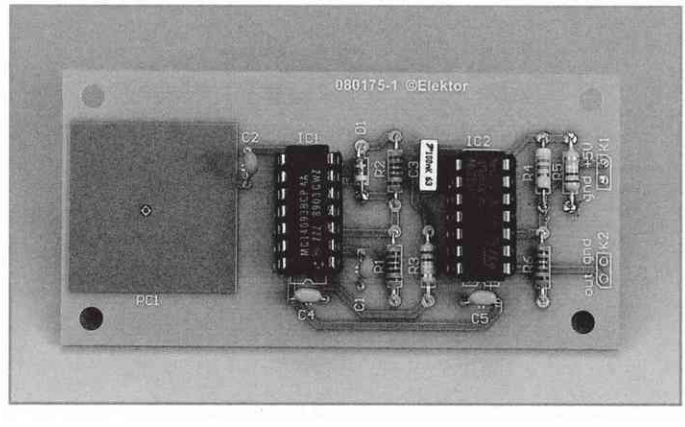

Capacitive touch sensors are based on the electrical capacitance of the human body.
When, for example, a finger comes close to the sensor, it creates a capacitance to Earth with a value of 30 to 100 pF. This effect can be used for proximity detection and touchcontrolled switching.

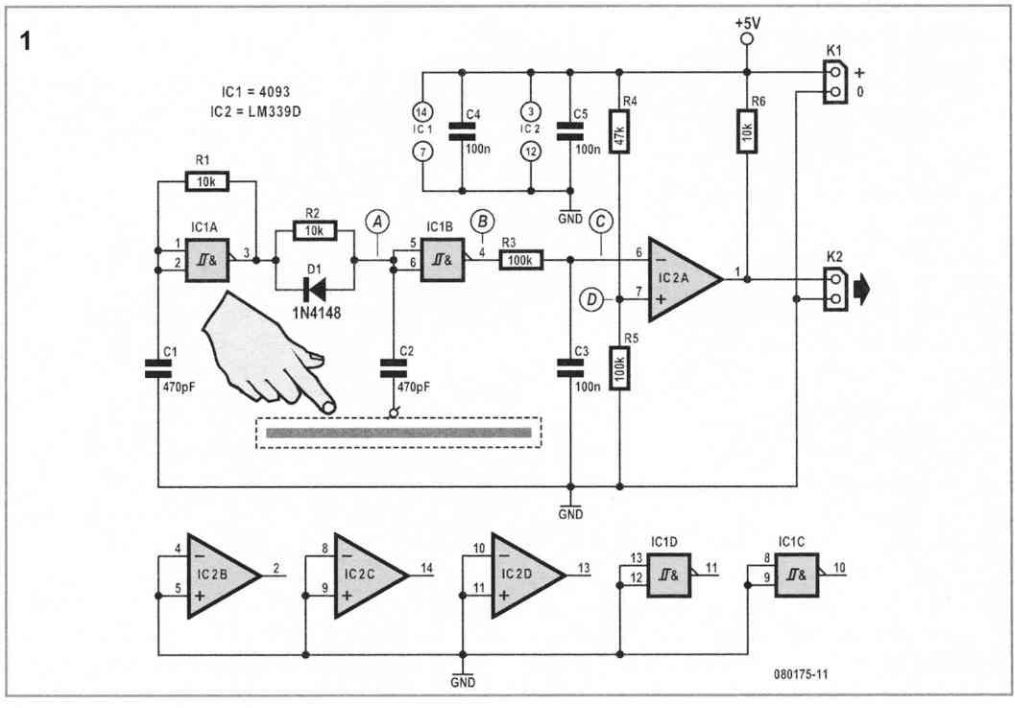

Capacitive switches have clear advantages compared to other types of touch switches (for example 50 Hz or 60 Hz detection or resistance detection), but are often more complex to implement. Manufacturers such as Microchip have in the past designed specialist ICs for this purpose. However, it is still possible to design a reliable capacitive detector and/or switch using only a limited number of standard components.

In this design we detect the change in the pulsewidth of the signal when the contact is touched. In **Figure 1** the following stages can be recognised, from left to right:

- a square-wave generator with a frequency of 300 kHz, using a Schmitt trigger IC (CD4093);
- an RC network with a flyback diode, followed by a Schmitt trigger/contact plate with an isolation capacitor of 470 pF;
- an RC network that converts the change in pulsewidth into a voltage. This voltage is about 2.9–3.2 V when the plate is touched (and 2.6 V when it isn't touched);
- an LM339 comparator is used to compare the voltage at point C with a reference voltage (D). The latter is set to about 2.8 V using a potential divider.

As long as the contact plate is touched the output of the circuit will be active. To make

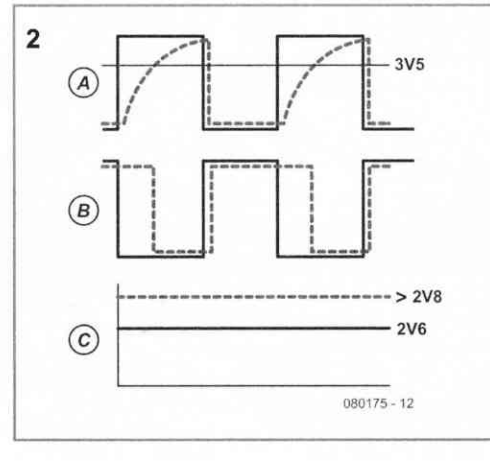

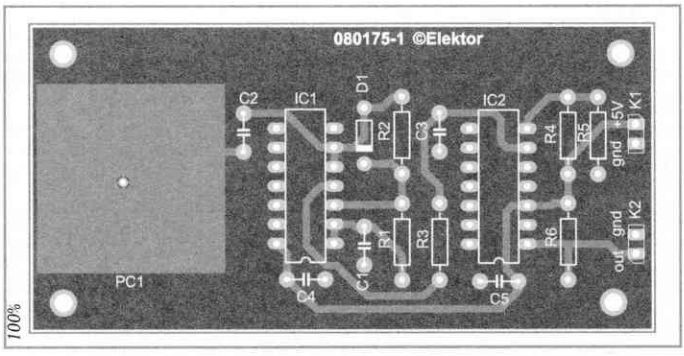

COMPONENTS LIST

Resistors
R1, R2, R6 = 10 kΩ
R3, R5 = 100 kΩ
R4 = 47 kΩ

Capacitors
C1, C2 = 470 pF
C3, C4, C5 = 100 nF

Semicondcutors
D1 = 1N4148
IC1 = 4093
IC2 = LM339D

Miscellaneous
K1, K2 = 2-way pinheader
PCB: *www.thepcbshop.com*

the operation of the circuit clearer we have shown the signals at various points in **Figure 2**. The dotted line represents the signal when the plate is touched, the solid line when it isn't touched.

The reference voltage at D has to be set up once via potential divider R4/R5 (change the value of R4). The required value is strongly dependent on the surface area of the contact plate (this is usually a few square centimetres). Larger surfaces increase the capacitance and the voltage at C will therefore be greater when the plate isn't touched. The reference voltage at D should then be set closer to 3.4 V. The touch sensor can therefore also be made to work with larger areas (such as the complete metal enclosure of a device).

The circuit only works when a connection for higher frequencies (300 kHz) is made to Earth in some way. The circuit therefore doesn't work in battery-powered systems without a connection to Earth.

In many systems without a direct connection to Earth there is sufficient parasitic capacitance to the mains Earth. In some cases it will be necessary to add an extra capacitor between the mains Earth and the Ground of the circuit. To comply with safety regulations this capacitor should be rated for >3–4 kV (i.e. a Class Y capacitor).

The output signal can be used in various ways to switch on systems. The addition of an extra Schmitt trigger to the output is recommended in many cases, especially if the output connects to a digital input.

(080175-I)

Downloads
The layout for the printed circuit board is available from the Elektor website as a free download; ref. 080175-1.zip.

078 Slave Flash Trigger II

AUDIO, VIDEO AND PHOTOGRAPHY

Peter Metcalfe

Using any camera in a dull or dark environment generally requires the use of supplementary light. This is a standard technique, and even where adequate natural lighting exists, to take conventional film pictures with enhanced contrast using a 'fill-in' flash for

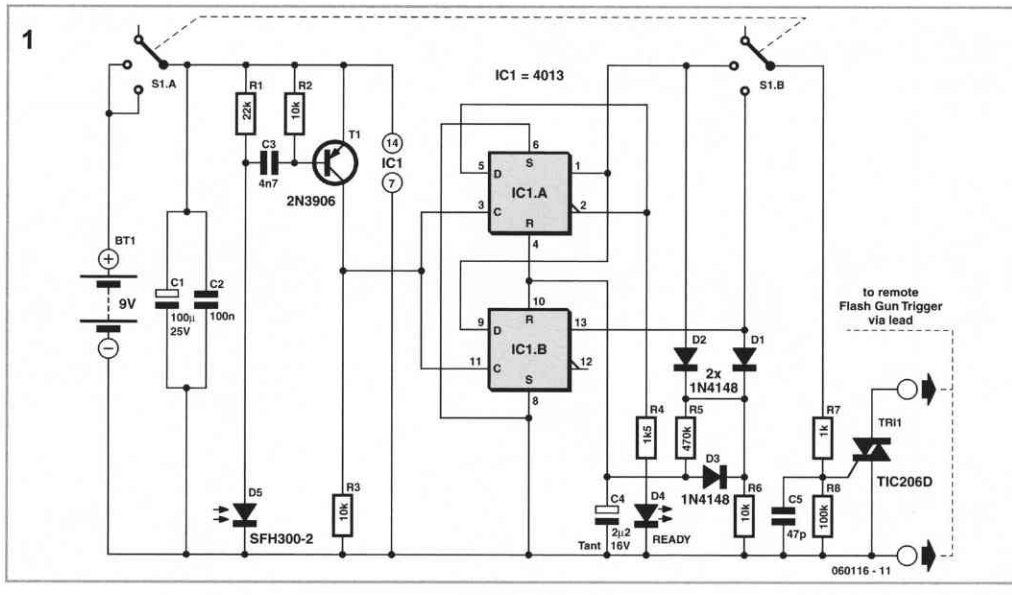

foreground subjects in shade. A flash is often built into the camera body, but the internal flash is not usually powerful enough to illuminate subjects much more that 3 m or so from the camera. On SLR cameras a hot-shoe is provided for triggering an auxiliary, more powerful flash, but the small pocket cameras are not so equipped. However, it is possible to trigger a slave flash from the camera flash by optical means.

Even so, things are not so simple, for some cameras, e.g. Olympus, Nikon, Canon actually fire twice, although it appears to be once to the naked eye. The first flash sets the exposure and the second takes the picture.

The presented trigger circuit optically receives the camera flashes and either fires at the same time as the first flash or has one flash delay before triggering the slave flash. Additional counting circuitry is required for more than one delay (covered by modified circuit not presented here). Here's how it works. The response of phototransistor D5 to the external camera flash is pulsed by a transistorised amplifier T1 into the dual flip-flop clock IC1. One output of a flip-flop illuminates an LED as a 'ready' signal. A double pole 3-position slide switch, S1, selects none (e.g. for Kodak camera) or one (e.g. for Olympus camera) flash delay before triggering. Both flip-flops are used in the 4013, the clock signal derived from the flash is used (triggered on the rising clock signal) to 'divide by two' and trigger the TIC206 triac on the first or second flash. A simple RC timed reset mechanism around R6-C4 is used with a relatively long delay (about half a second) before resetting the entire circuit. The

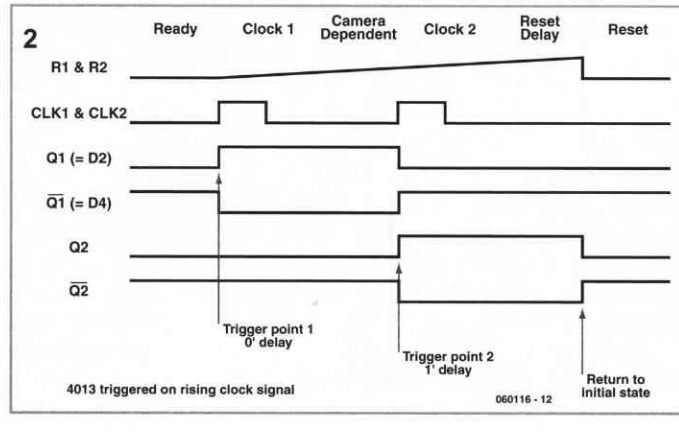

advantage of the triac is that a trigger voltage of either polarity can be handled. The 2N3906 may be replaced by its near equivalent the BC212L.

The SFH300-2 photodiode is supplied by Maplin as part number MES NP64U. The triac may also be a TIC126D.

(060116-1)

079 Software-defined Valve Radio

RF (RADIO)

Burkhard Kainka

Software-defined radio (SDR) is all the rage. The idea is this: a very simple radio receiver is given topof- the-range performance with the aid of a little software.

Even newer is SDVR (softwaredefined valve radio), where a single-valve radio is turned into a world receiver with some help from a PC. Power comes from four AA cells for the heaters, and a 9 V battery provides the anode supply.

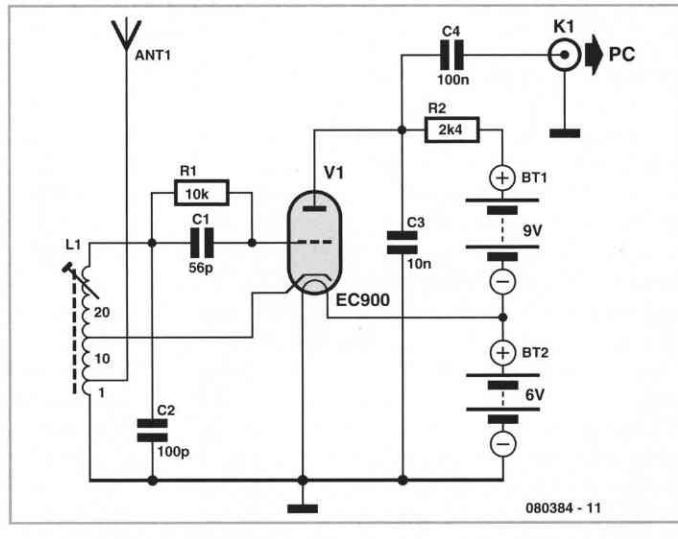

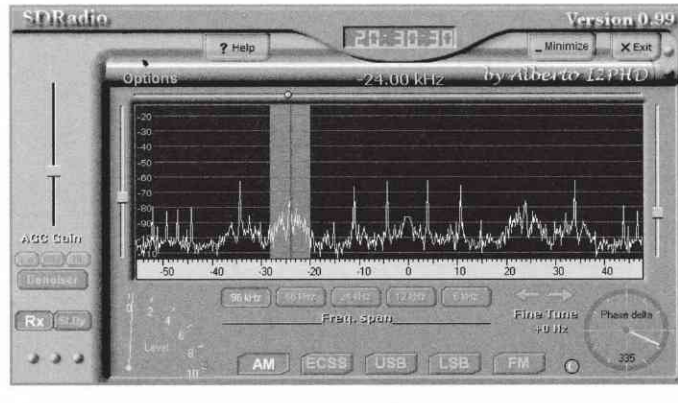

The circuit is very simple: a PC900 (EC900) triode is used in a homodyne regenerative (Audion) configuration. Adjustment of the feedback is not necessary as the receiver always oscillates at high amplitude.

A tuning capacitor can also be dispensed with as fine tuning is done in software. Coarse adjustment of the received band is possible by screwing the inductor core in and out. The receiver works in the 49 m band using a 30-turn coil on an 8 mm former.

The SDRadio program by Alberto (*http://digilander.libero.it/i2phd/sdradio*) is used as the decoder. The illustration shows an AM station being received. The sound card used (a USB Sound Blaster) has a sample rate of 96 kHz, giving a tuneable range of 48 kHz. In the illustration we can see three further transmissions.

A weakness of the receiver is that it only has one output channel. This means that each transmitter can be seen twice in the spectrum display, and there is no suppression of image frequencies as would be expected in a fully-featured SDR. Sometimes this can result in audible interference, in which case the only remedy is to tune to another transmitter. And if none of the channels appeals, you can simply move to another band with a twist of the screwdriver.

(080384-I)

080 Pipe Descaler

HOME AND GARDEN

Christian Tavernier

For many years now, magnetic (or electromagnetic) water descaler devices have been showing up on the shelves of Home Improvement and other DIY stores all over Europe. Despite the numerous studies completed on that subject, by manufacturers as well as by various consumer associations, none have been able to conclude on the efficiency of commercial pipe descalers in a decisive manner.

Since electronic devices of this type are relatively expensive (especially when we discover what they are made of!), we decided to offer this project to our readers. For the price of a few tens of pounds, you will be able to evaluate the state of your own faucets, pots, and other pipes.

The device we're offering as a project is identical to top-of-the-line items found on sale; in other words, it includes the bi-frequency option because it seemed that would be the best way to fight lime scale deposits. An initial astable oscillator, based on a traditional 555, labeled IC3, functions at around 10 kHz when the only capacitor C6 is operating; in other words, when T1 is blocked. The latter is controlled by another astable oscillator, based on IC1 this time, but which functions at about 1 Hz. When T1 is turned on by IC1, capacitor C4 is effectively in parallel with C6 which divides the frequency produced by IC3 by two, i.e. to about 5 kHz.

In order to have high amplitude signals, the power supply operates with a midpoint transformer utilized in an unconventional way, with simple half-wave rectification. The first half of the secondary delivers 15 V_{AC} which, after being rectified, filtered and regulated by

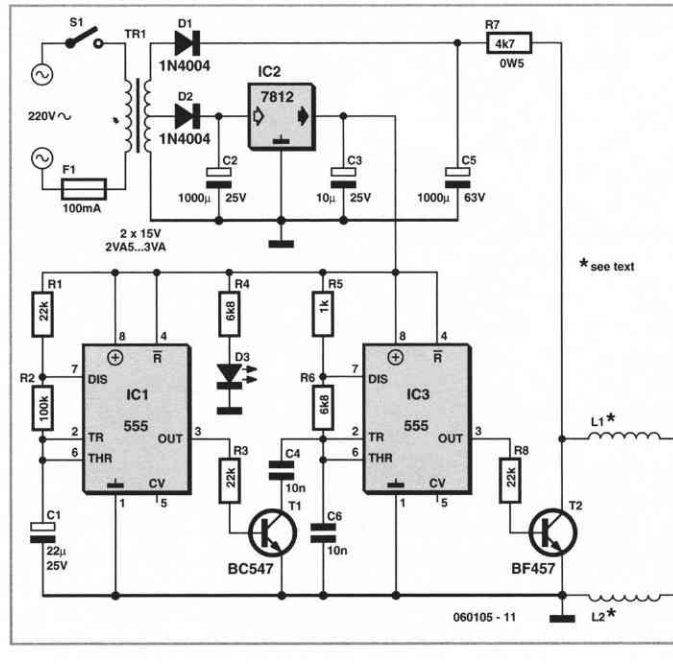

IC2, supply stable current of 12 V_{DC} to supply power to the oscillators.
The entire secondary makes it possible to have available, after rectification, approximately 40 V_{DC} which is used to supply power to coils L1 and L2, wound around the pipe systems on which the assembly will work. To do that, IC3 is followed by high-voltage transistor T2 (a BF457 or equivalent) which chops this high voltage to 5 or 10 kHz frequency depending on the state of IC1.
LED D3 lights up to signal that the power supply is present.
Coils L1 and L2 are simple inductors made from insulated flexible wire, with about ten windings each. They have to be wound around the pipes carrying the water to be 'treated' and are spaced about ten centimeters from each other. Neither the material of the pipe system, nor its diameter, should have any influence on the efficiency of the device.
Paradoxically, these coils have one end in the air, which may surprise you as much as us but we indicated at the beginning of this article, that our goal with this project is not to explain the principle but rather to allow you to make the same device as those sold in stores, so that you can perform your own tests.

www.tavernier-c.com (060105-1)

081 Digital Rev Counter for (Older) Diesels

TEST AND MEASUREMENT

Romain Liévin

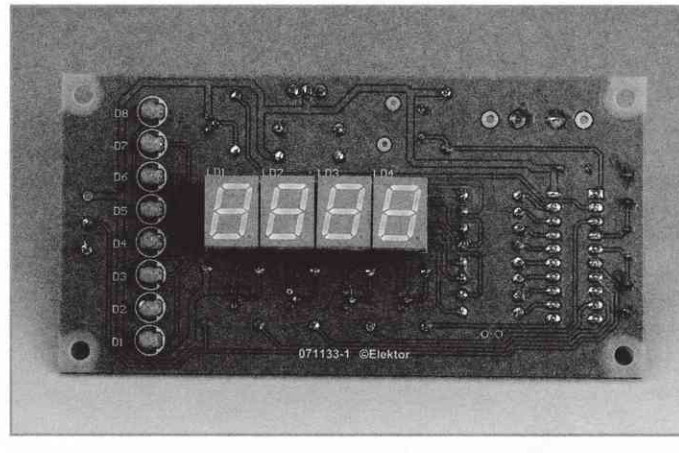

Current diesel vehicles are (practically) all fitted with a rev counter. But diesel-engined cars tend to 'last' longer than their counterparts with petrol engines, so it is more than likely that there are still a fair number of older diesel cars around without such an instrument for measuring engine speed. We're going to enable you to fit them with one.

On a petrol engine (motorbike or car), it's very easy to pick up pulses that reflect the engine revs. The number of articles that have appeared in Elektor are proof of this.

Most circuits confine themselves to detecting the pulses generated by the ignition, either by magnetic coupling or directly, after shaping of an electrical signal. Since diesel engines by their very nature don't have spark plugs, an alternative method has to be found. Here, it takes the form of a logic Hall-effect sensor (UGN3140) that delivers a pulse every time a magnet passes in front of it. You could equally well use a reflective photodetector...

The biggest difficulty lies in finding a spot to fit one or more magnets. The timing belt pulleys would be a good location, but the whole assembly is always protected by a cover. Diesel vehicles are often fitted with a vacuum pump for the brake servo system. This pump is connected to the camshaft via a belt. The ideal spot for fitting two magnets and the

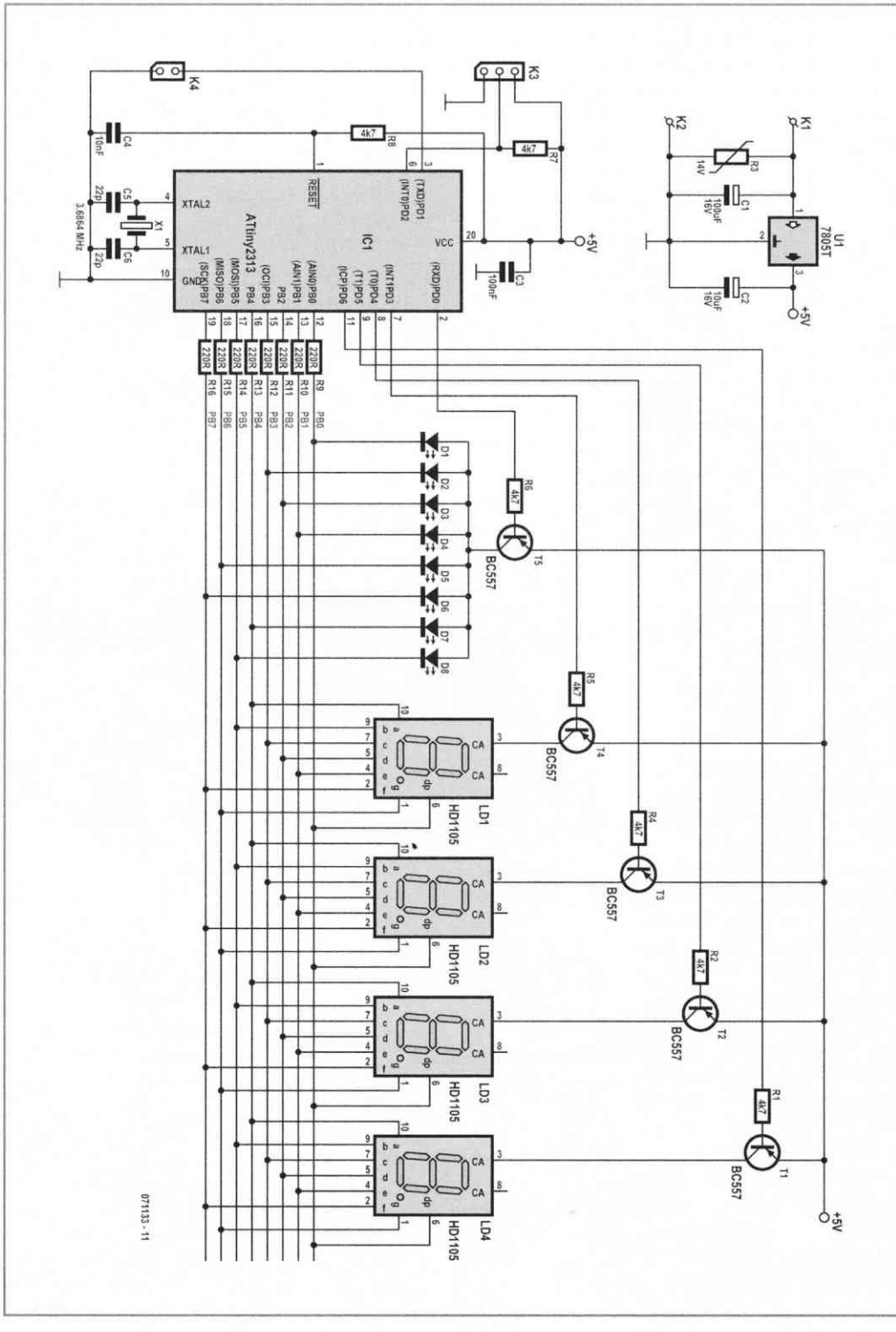
K1
K2
K3
K4
U1
7805T
+5V
R3
14V
C1
100uF
16V
C2
10uF
16V
C3
100nF
C4
10nF
C5
22p
C6
22p
X1
3.6864 MHz
4k7
R8
R7
IC1
ATtiny2313
RESET
XTAL2
XTAL1
GND
VCC
(TXD)PD1
(INT0)PD2
(INT1)PD3
(T0)PD4
(T1)PD5
(ICP)PD6
(RXD)PD0
(AIN0)PB0
(AIN1)PB1
PB2
(OC)PB3
PB4
(MOSI)PB5
(MISO)PB6
(SCK)PB7
220R
R9
R10
R11
R12
R13
R14
R15
R16
PB0
PB1
PB2
PB3
PB4
PB5
PB6
PB7
D1
D2
D3
D4
D5
D6
D7
D8
R6
R5
R4
R2
R1
BC557
T5
T4
T3
T2
T1
HD1105
LD1
LD2
LD3
LD4
CA
dp
071133 - 11

sensor! Why two magnets? Any good mechanic knows that a 4-stroke engine has to make two revolutions for each engine cycle. But the camshaft controls this cycle in just a single revolution, and hence it turns at half the engine speed. So using two magnets enables us to obtain the correct number of pulses.

As you can see, the circuit amounts to just a single IC, an AVR microcontroller from Atmel. Long gone are the days when it took no less than six ICs to produce even a two-digit a rev counter!

What's more, using a microcontroller with a crystal-controlled clock makes it possible to dispense with any form of calibration. The microcontroller contains everything needed to count pulses, using its interrupt input, and directly drive a multiplexed display, using its I/O lines that can sinking up to 20 mA. The display comprises four digits, to count from 60 to 9,999 revs.

The bargraph is just a little gimmick that makes it easy to visualize engine acceleration or deceleration over a range of 1,000 rpm. It consists of eight LEDs, so offers a resolution of 125 rpm. To improve display accuracy, we recommend using two additional intermediate magnets (i.e. a total of four magnets on the camshaft).

Because of the way the software has been designed (see software paragraph), the device needs at least one pulse every 0.5 second, i.e. 2 Hz, and hence a resolution of 120 rpm, which is not really enough and leads to an unstable display.
The Hall-effect sensor is connected to header K3. Two additional magnets make it possible to increase the resolution to 60 rpm. The number of magnets fitted can be configured by means of the jumper fitted to header K4 (which may, as applicable take the form of a:

- no jumper = two magnets,
- jumper fitted = one magnet.

Not much needs be said about the power supply, except that:

- the regulator might need a heatsink, as the vehicle on-board voltage can reach 14 V, which represents a volts drop of 9 V with a current consumption of 30 mA, i.e. ≈ 0.3 W;
- the (vital) presence of a special car varistor to protect the regulator from voltage spi-

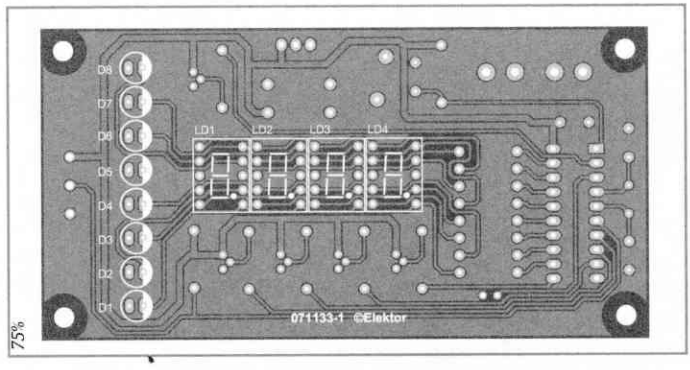

COMPONENTS LIST

Resistors
R1, R2, R4-R8 = 4kΩ7
R3 = S14K14 varistor
R9-R16 = 220 Ω

Capacitors
C1 = 100 µF 25V
C2 = 10 F 25V
C3 = 100 nF
C4 = 10 nF
C5, C6 = 22 pF

Semiconductors
D1-D8 = LED, red, rectangular
LD1-LD4 = 7-segment LED display, common anode, e.g. HD1105
T1-T5 = BC557
IC1 = AT90S2313, programmed with hex file 080238-11
IC2 = 7805T

Miscellaneous
X1 = 3.6864 MHz quartz crystal
K1, K2 = solder pin
K3 = 3-way pinheader
K4 = 2-way header with jumper
UGN31 Hall-effect sensor
PCB, ref. 071133-1 from *www.thepcbshop.com*

kes. Otherwise, it's goodbye to the regulator the first time you start up!

This project requires relatively few resources, whence the use of a small microcontroller: the Atmel AT90S2313, which by now is an old faithful in Elektor. It has two timers, I/O lines capable of driving LEDs directly, and an interrupt input. The interrupt input is used to count pulses by incrementing a software pulse counter (cntH:cntL). The timer is set to generate an interrupt every 2.5 ms. This interrupt is used to:

- multiplex the display: each display is refreshed every 2.5 ms; hence the whole display is refreshed at a frequency of 80 Hz;
- increment a software counter up to 250 ms (= one tick).

At each tick, the value of the pulse counter is stored alternately in counter 0 or counter 1. This tick is also used in the primary loop to trigger counter processing and display refresh.

In the primary loop, counters 0 and 1 are added together to obtain the number of pulses seen during the last two consecutive 250 ms time slots, i.e. 0.5 s. This trick makes it possible to update the display more frequently (250 ms) without having to wait for the end of the measurement (0.5 s). This makes it possible to increase the speed of the digital chain without compromising accuracy. The remainder of the software consists of converting the number of pulses into rpm. Everything is implemented in integer arithmetic. Given that the measurement is performed over 0.5 s, the result has to be multiplied by two to obtain the frequency, and then by 60 to obtain a value in revs per minute.
All that then remains is to convert the binary result into a decimal value, which is achieved using Atmel's binary-to-BCD conversion routines (AVR204 Application Note). The most significant digit (MSD) is set to 0, and the result is then converted back to binary. This is a crafty method for calculating a remainder out of 1,000 (modulo) for the bargraph. This value then has to be divided by eight, as the bargraph has eight LEDs (coded by subtraction and a loop). The result is used as an index for a decimal-to-7-segment transcoding routine. As supplied, the software occupies about 75% of the program flash memory.
The software has been developed to work on an AT90S1200 or an AT90S2313. With a bit of luck it should also work on an AT90S1200, but although we haven't actually tried that, we're sure there are Atmel programming enthusiasts among our readers capable of doing it. Let us know!

(071133-I)

Downloads
The PCB artwork file is available for free downloading from our website *www.elektor.com*, archive #071133-1.zip.
The source code and .hex files for this project are also available from *www.elektor.com*; archive #071133-11.zip.

Web Links
AT90S2313 datasheet:
www.atmel.com/dyn/resources/prod_documents/doc0839.pdf
S14K14 varistor datasheet:
www.datasheetarchive.com/preview/3078060.html
UGN3140 Hall-effect sensor datasheet:
www.datasheetarchive.com/preview/3527952.html

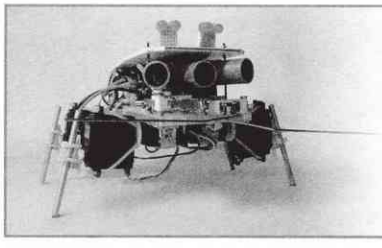

Machine-power starting on page 340!
91 robot-circuits, -ideas, -tips and more...

082 SMD Crystal Adapter

Ton Giesberts

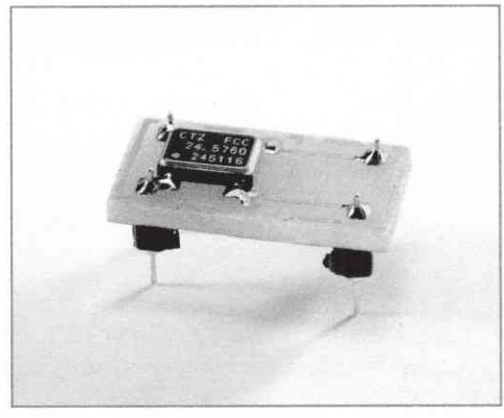

The idea for this adapter was really born out of necessity. The 24.576-MHz crystal oscillator that is used in the Audio ADC 2000, (24 bit/96 kHz, Elektor March 2001) is not (easily) available any more. A colleague who was interested in the circuit and was keen to try out the prototype realised that a 25 MHz oscillator was used at the time. In order to create useful recording material it is of course necessary to use the correct sampling frequency, 48 kHz, that is. This requires 512 times 48000 Hz, or 24.576 MHz. Fortunately this frequency is available as part of a series of oscillators from Citizen, the CSX- 750FC series, to be more specific.

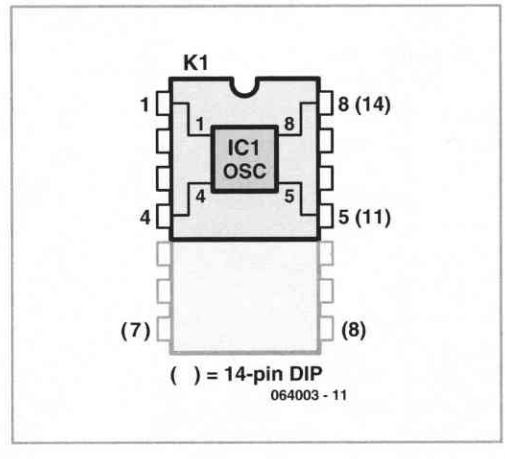

These oscillators are housed in a very small SMD package. We originally used the SG531P-series from Seiko Epson in the design for the A/D-converter. This comes in a kind of 8-pin DIL package.

So, to nevertheless enable us to use the Citizen version, we designed a very small circuit board that adapts the SMD device with 4 pins to the footprint for the 8-pin DIP version. The connection pin order is the same. In addition, we have made the PCB also suitable for the 14-pin version (SG531P series). This requires two additional pins. These are located at pins 7 and 8 of the 14-pin package and are connected to pins 4 and 5 respectively of the 8-pin package.

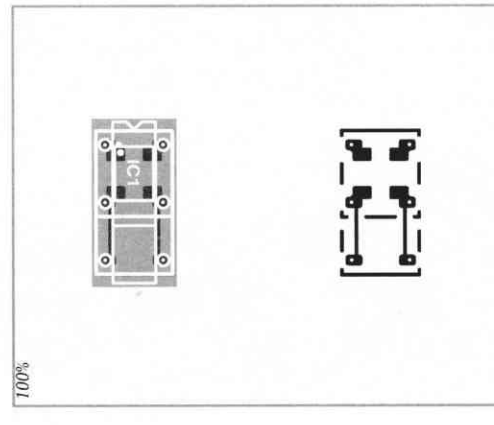

Pin 1 is in both cases the enable pin and pin 8 (8-pin) and 14 (14-pin) are +5 V. Pay close attention when ordering the oscillator. It so happens that there are also 3.3-V versions (CSX-750FB and FJ). You need a 5-V version for the Audio-DAC.
There is also a third letter after the type number, which indicates the accuracy: C or F for 100 ppm and B for 50 ppm.

If the PCB is to be used in place of an 8- pin oscillator then you can trim the board along the line that is clearly visible on the solder side of the board.

The solder side (copper side) is the top side. Just to be clear: the dot on the package of the CSX750FCC is pin 1 of the oscillator. We used thin pin headers for the connections so that the small adaptor can be fitted into an IC-socket or soldered directly onto a PCB.

The IC is available from Digi-Key.

(064003-1)

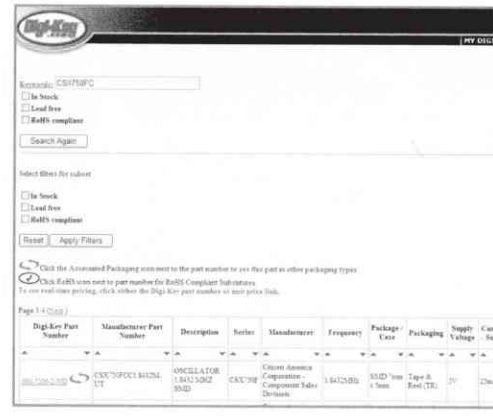

083 USB Standby Killer

COMPUTERS AND INTERNET

Wim Abuys

When turning a computer on and off, various peripherals (such as printers, screen, scanner, etc.) often have to be turned on and off as well. By using the 5-V supply voltage from the USB interface on the PC, all these peripherals can easily be switched on and off at the same time as the PC. This principle can also be used with other appliances that have a USB interface (such as modern TVs and radios).

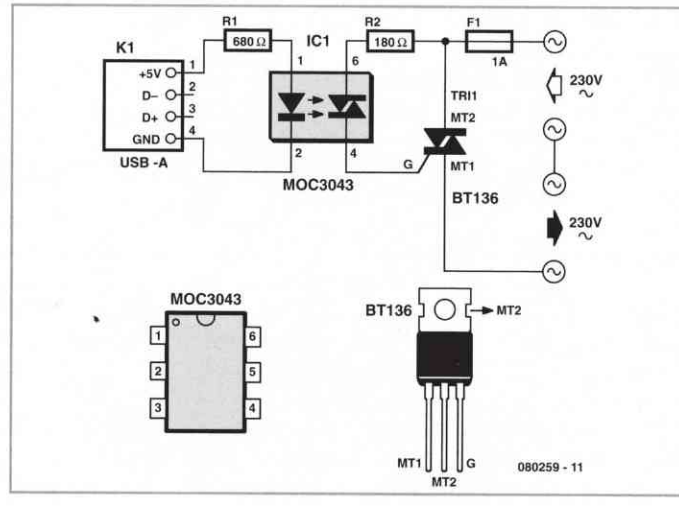

This so-called 'USB-standby-killer' can be realised with just 5 components.
The USB output voltage provides for the activation of the triac opto-driver (MOC3043) which has zero-crossing detection. This, in turn, drives the TRIAC, type BT126.
The circuit shown is used by the author for switching loads with a total power of about 150 W and is protected with a 1-A fuse. The circuit can easily handle much larger loads however. In that case and/or when using a very inductive load a so-called snubber network is required across the triac. The value of the fuse will also need to be changed as appropriate.
The circuit can easily be built into a mains multi-way powerboard. Make sure you have good isolation between the USB and mains sections (refer to the Electrical Safety pages elsewhere in this book).

(080259-I)

084 Driver for 20 LEDs

Eberhard Haug

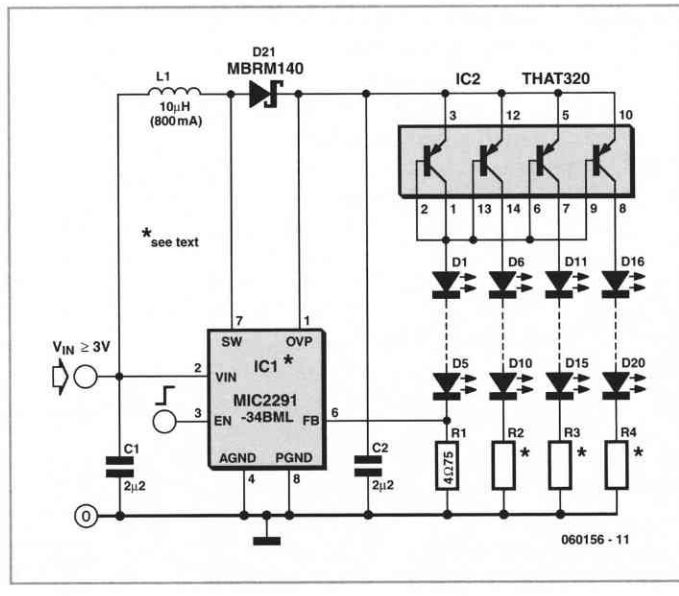

If we wish to use a step-up switching regulator to run several LEDs from, for example, a 3 V battery, we find that the maximum usable mark-space ratio limits us to driving just a few LEDs in series.

If we have seven white LEDs in series the total forward voltage will be about 7 times 3.4 V, or 23.8 V, requiring a mark-space ratio of around 90 %. This is the upper limit for many switching regulators. If we want to drive more LEDs, we must divide them into a number of parallel strings, for which the regulator will of course have to supply the necessary current.

There are various ways to drive a parallel array of series-connected LEDs. The simplest approach is to wire a number of chains, each consisting of the same number of LEDs and a series resistor, in parallel, hoping that the total forward voltage of the LEDs in each chain is approximately the same. We can sense the current in a single chain using a sense resistor R, and thereby deliver the same current to the other chains as well. Unfortunately, the assumption that the total forward voltage of the LEDs in each chain is the same is not always borne out in practice.

To get around this problem we can use a multi-way current mirror, which can, for example, be constructed using a bipolar transistor array such as the THAT320. This contains closely-matched PNP transistors. The current mirror function is implemented in the first (regulated) chain by connecting the base and collector of its transistor together; the base and emitter connections of all the transistors are also wired in parallel. Since there will be a small effect on the currents in the other chains, it is best not to dispense with their series resistors R, in the interests of improved current matching.

The circuit shows a type MIC2291 PWM step-up LED driver from Micrel driving a four-by-five LED array. This arrangement leaves the device a little headroom in terms of mark-space ratio and total power. The voltage at the output will be at most 18 V in normal operation. A particular advantage of the MIC2291 in this circuit is its low feedback voltage of 95 mV, which makes for a correspondingly high efficiency. The current in each chain is calculated as follows:

$$I_{LED} = \frac{95\,mV}{R1} = \frac{95\,mV}{4{,}7\ \Omega} = 20\,mA$$

The circuit can operated from voltages from

3 V to 10 V. If fewer than five LEDs are used in each chain, or if LEDs with a lower forward voltage are used, the battery voltage may need to be reduced: it must be lower than the total forward voltage drop of the chain. Otherwise, as with any boost converter, an unregulated and potentially damaging current will flow continuously through the LEDs.

Also, if the chains contain different numbers of LEDs or if different colour LEDs are used, care must be taken to ensure that the sum of the LED forward voltages is greatest in the first (regulated) chain.

The EN input allows the LED array to be turned on (EN>1.5 V) or off (EN<0.4 V), or dimmed using a PWM signal. An alternative (analogue) dimming technique is also described in the MIC2291 data sheet.

The Schottky diode must be a fastswitching type with a low capacitance and low voltage drop, such as the MBRM140 or SS14.

Ceramic capacitors C1 and C2 should be XSR or X7R types with a suitable working voltage. The 10 μH coil must have a rated current of at least 600 mA without saturating, and it should also have as low a resistance as possible. And of course, when building an LED driver circuit with a switching speed of 1.2 MHz the layout and construction of switching regulators should be observed.

The MIC2291-34BML and its lead-free counterpart the MIC2291-34YML in a 2 mm by 2 mm MLF package have a 34 V overvoltage protection circuit (and an extra OVP pin); the MIC2291YDS in a 5-pin SOT-23 package is a low-cost version without overvoltage protection.

Since we would otherwise have to implement this protection externally, the MLF type is preferred.

(060156)

Internet links

MIC2291 data sheet:
www.micrel.com/_PDF/mic2291.pdf

Application example:
www.micrel.com/_PDF/App-Hints/ah-59.pdf

THAT320:
www.thatcorp.com/300desc.html

085 Automatic S/PDIF Selector

AUDIO, VIDEO AND PHOTOGRAPHY

Ton Giesberts

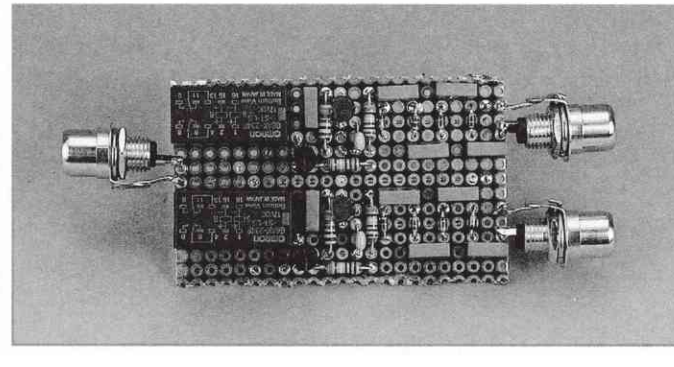

These days there is an increasing number of devices that have a digital audio output, for example digital cable tuners, satellite receivers, DVD players/recorders or game consoles/computers. It is often the case that the existing receiver doesn't have enough coaxial

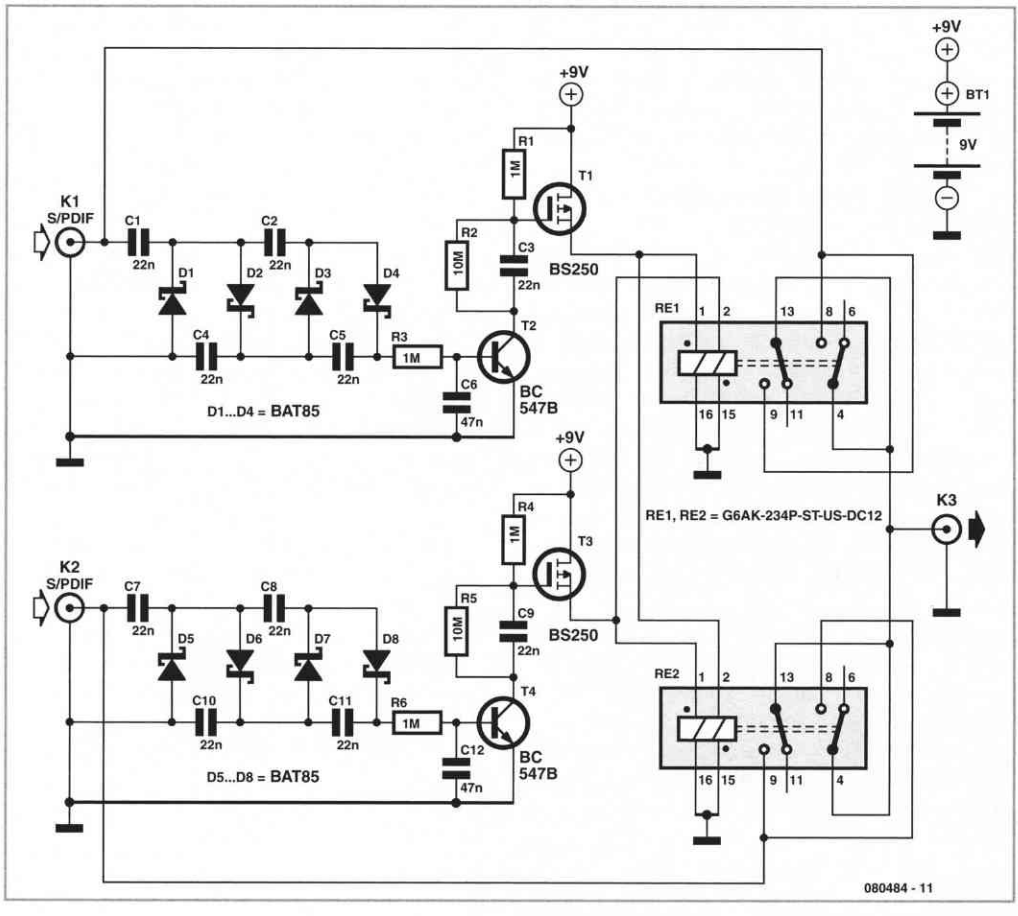

S/PDIF inputs to accommodate all these devices, or the receiver is at the other side of the room from the TV and other equipment, and we'd rather not lay three or four separate S/PDIF cables along the skirting boards. This clever little circuit gets round these problems in an ingenious way. It doesn't need a mains supply nor does it have any external switches. The latter makes it possible to hide the device behind the equipment.

The circuit detects the appearance of a new S/PDIF signal on one of its two inputs and switches this to its output, so that only one connecting cable is required to connect two devices with S/PDIF outputs to the receiver. When several devices are turned on that output a continuous S/PDIF signal, the required device needs to be momentarily turned off and then on again to select it. It is relatively easy to expand the circuit with more inputs.

Because we wanted to avoid the use of a mains adaptor for this circuit we decided to make it battery-powered. For the design we therefore strived to keep the current consumption as low as possible. That meant that we didn't use buffer stages or comparators to detect the input signals. Instead we used bistable relays, which only require a short pulse to change their state, which is then latched.

When an S/PDIF signal appears on one of the inputs, a cascade circuit is used to derive a DC voltage from it. Because the nominal voltage of S/PDIF signals is only 0.5 V_{pp} (when terminated by 75 Ω), each input has a cascade stage with four diodes and four capacitors. The generated voltage then becomes twice the peak-to-peak value, which in this case re-

sults in nearly 1 V. In order to keep the threshold voltage as low as possible the cascade stage is loaded as little as possible, the capacitors are as small as possible and for the diodes we've used special Schottky types (BAT85).
This signal is then fed to a bipolar transistor that requires about 0.5 V to 0.6 V for it to conduct. A base resistor of 1 MΩ and a capacitor are used for interference suppression. The bipolar transistor drives a differentiator C3/R1 (C9/R4 for the other channel) to create a short pulse for the relay. The gate of the following P-channel MOSFET is momentarily connected to ground via capacitor C3 and transistor T2. This FET then drives the set-coil of one relay and the reset-coil of the other relay. The BS250 used here can switch a direct current of 250 mA without any problems, and has an even high peak-current capacity (up to 500 mA).
The number of inputs can be increased by adding more of these stages. Note that when there are more than two stages you need to connect each reset-coil via diodes (e.g. BAT85) to the FETs. In that way the voltage on the reset-coils doesn't end up at the set-coils of the other relays.

Depending on the type of relay used, you typically need about 15 mA to energise each coil. This means that the maximum possible number of inputs is much more than you're ever likely to need.

It is possible to use 12 V types for the relays. The G6A series made by Omron are guaranteed to switch at 8.4 V, for example the G6AK-234P-ST-US-DC12. The coil resistance is 800 Ω, which means that it requires only 11 mA. If you find you have some 'hesitant' relays when you're using more inputs and switch the relays via diodes, you can always use 5 V types. The switching current will then be higher, but in practice this has little effect on the battery life.

The current consumption of the circuit with signals present at both input is about 1.6 μA. This implies that the maximum theoretical battery life could be 35 years for a standard 9 V battery (500 mAh), which is much longer than its expected shelf life. Another option is to use three or four Lithium cells in series. These probably will give the circuit 'near-eternal life'.

(080484-I)

086 Audible Flasher Warning

AUDIO, VIDEO AND PHOTOGRAPHY

Udo Burret

If you're a biker or scooter rider you'll know how easy it is to forget to cancel your flashing indicators after turning without an audible reminder. Constantly glancing at indicator lamps is hardly an option; your eyes should be on the road ahead!

The simple circuit shown here provides an audible reminder. The clever bit is the way it doesn't annoy you by beeping the instant you activate the flashers but only after a preset time, in other words when your indicators are active longer than normal.

Supply to the circuit is through the flasher relay. With the indicators activated a square-wave voltage reaches bridge rectifier D1-D4 via terminal T1 or T2, with the other terminal remaining grounded through the indicator lamp that's inactive. The pulsed DC voltage is stored and smoothed in C1, with D5 preventing the electrolytic from discharging during the periods when the flasher voltage is off. This also provides an adequately clean supply voltage for the 555 timer whenever the indicators are operating.

Timer IC1 is used here as an oscillator and controls a piezo sounder by means of transis-

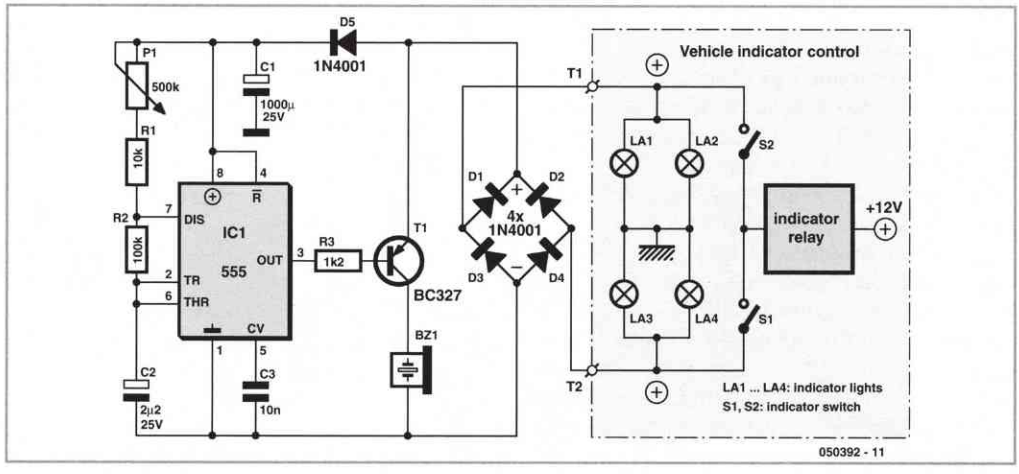

tor T1. The output of the 555 is active Low, meaning that initially the transistor is blocked and the sounder is silent. The timer always charges and discharges capacitor C2 to a level between a third and two-thirds of the operating voltage, producing an interval of $0.7 \times C2 \times (R2 + R1 + P1)$ [s].
The preset enables you to set this delay up to a second or so. The initial delay, before the sounder first operates, is significantly longer, however, because the electrolytic has zero charge.
Only after this delay is the output active, for the pulse duration of $0.7 \times C2 \times R2$ (equivalent to about 0.15 seconds), enabling the sounder to operate. This applies only when +12 V is present at the collector of transistor T1, which is the situation when the flasher relay is just switched on and the indicator bulbs light up.

The circuit is built inside a splash-proof enclosure, installed on your machine in a position that's out of harm's way. The audible sounder can be positioned anywhere outside the enclosure if it's a waterproof type. The audible control unit requires only two cable connections, which can be made at any convenient access point.

(050392-1)

087 Programmable Servo Driver

HOBBY AND MODELLING

Gilles Clément

The objective of the circuit described in this article is to create a servo motor polarity-inverter, to allow the drive to a model servo motor to be inverted with respect to the command from a radio-control receiver channel.

Hence this module is inserted between one of the receiver outputs and the servo motor to be driven.

One of the most obvious applications is to reverse the rotation sense of the servo motor output arm. This feature is useful when all the channels of a receiver are used up and you need to control a second servo motor in parallel with the first one (using a 'Y' cable) but inverting the sense of one of them.

Generally, it is also often useful to be able to adjust the end positions of the output arm and the neutral position independently (when

the two servo motors aren't exactly the same or are mounted differently in the two wings, for example).

The movement of servo motors used in modelling is coded using pulse width modulation (PWM).
The width usually varies from 1 ms to 2 ms, with the signal repeating at 20 ms intervals (i.e. 50 Hz).

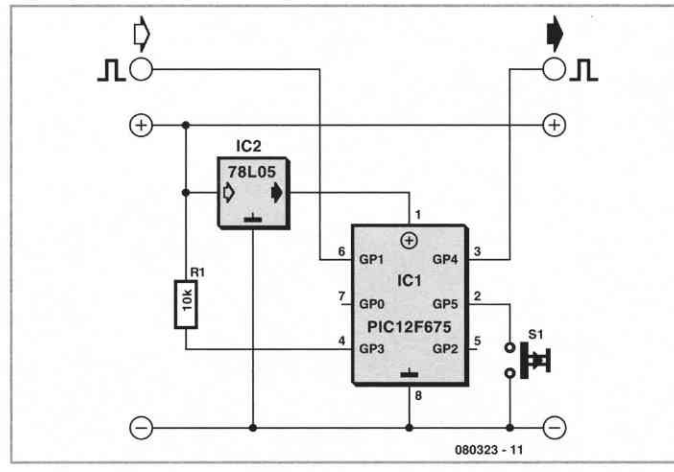

The transmitter controls use potentiometers whose travel defines the pulse width for each channel. These pulses are sent sequentially (as many as there are channels) to the receiver, which decodes them and sends them to the relevant outputs according to the order in which they arrive.

As we've said, the objective here is to invert the travel of a servomotor output arm, while also permitting the whole of the range of movement to be manually shifted so as to adjust the rudder neutral position ('trim').

Let's take a look at the electronics. The microcontroller we've chosen here is the deceptively small 12F675 PIC from Microchip. It's quite extraordinary, a real little eight-legged marvel! Although it is really very small (8-pin DIL), it is capable of doing masses of things. A 12F675 is in fact the heart of the whole circuit (see circuit diagram).

Of course, for it to work, it needs to have the required .hex file, extracted from the archive file 080323-11.zip (see Downloads). The microcontroller only needs three additional components (excluding the servomotor extension, the most expensive item in this project): a 5 V regulator (78L05) to provide the supply voltage, a miniature push-button used as a control, and one pull-up resistor.

The electronics will fit onto a piece of prototyping board of 9×6 holes, making it easy to fit into the scale model concerned.

Just a word about the calibration of the internal oscillator. The last byte of the 12F675's program memory contains the calibration value for the internal oscillator, which makes it possible to adjust the clock to 4 MHz within ±1%. Right at the start of your operations, you need to go and read this byte (read the memory) and save it as there is a danger of erasing it when you start programming.

One of the most important aspects of this project is adjusting it (when you are aware of the consequences an error here can have – just try piloting a scale model by reversing the controls!).

Warning: you mustn't touch the transmitter during this stage – i.e. while powering up the receiver – as we are measuring the receiver output signal when the transmitter control is at rest.

Web Links
12F675 datasheet:
http://ww1.microchip.com/downloads/en/devicedoc/41190c.pdf

Downloads
The source code and .hex files for this project are available for downloading from the Elektor website at *www.elektor.com*; archive file 080323-11.zip.

We start first of all by confirming the measurement of the input signal, very important in order for the output signal calculation to be correct. Warning: the remark to not touch the transmitter during this stage applies here too, for the same reasons. If the push-button is pressed a second time, the gradual shift of the neutral position starts, then if it is released and immediately pressed again, the movement takes place in the opposite direction. This mode is exited automatically if the push-button hasn't been pressed for 2 seconds. The servomotor 'flutters' a little to indicate the end of the steps.

One conclusion is called for: it works very well, and it doesn't cost an arm and a leg...

Clemgill@club-internet.fr (080323-I)

088 DRM Receiver Upgrade

RF (RADIO)

Burkhard Kainka

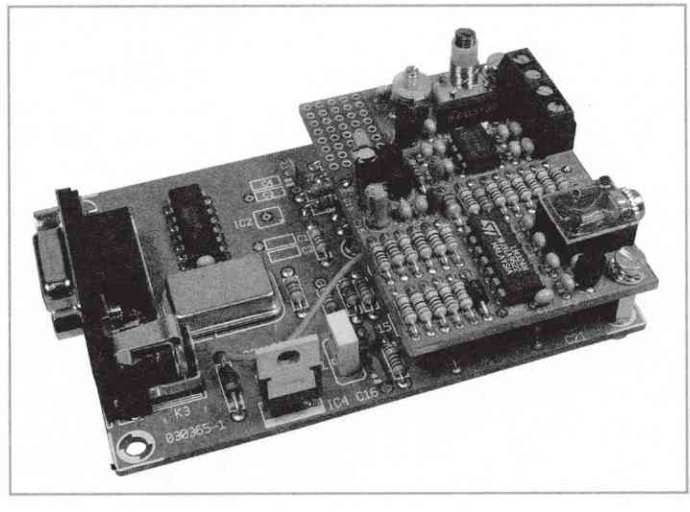

The DRM Receiver described in the March 2004 issue of Elektor Electronics has proved very popular and many thousand of the receivers are already in the field. Its excellent design is both simple and inexpensive.

In the best tradition of homebrew construction we have supported the receiver by publishing two add-ons to the basic design; an automatic preselector (11/04) and an automatic gain control (2/06). Both of these add-ons have been subject to continuous refinement by the author and the resulting combined circuit shown here can now be assembled on a readymade PCB.

This design equips the DRM receiver with an automatically tuned preselector for short wave signals in the frequency range from 3.5 MHz to around 16 MHz and an automatic gain control (AGC). The modifications improve the properties of the basic DRM receiver, in particular giving better image frequency rejection and higher receiver sensitivity so that more distant DRM, AM, SSB and CW broadcasts can be detected.

The RF input stage of the circuit in **Figure 1** (next page) is tuned by a varicap and passed through the source-follower formed by T1. A tuning voltage is generated by the passive PLL circuit and NE612 mixer. The DDS output signal from the receiver is connected to the input connector CON6. The type of varicaps used in this design have a capacitance of 480 pF at 1 V. Triple packaged BB313 are shown on the diagram but individual BB112 varicaps can be substituted. An additional (unused) BB313 shown on the diagram facilitates future expansion of the design.

The second part of the circuit is an automatic gain control stage built from an LM324 quad

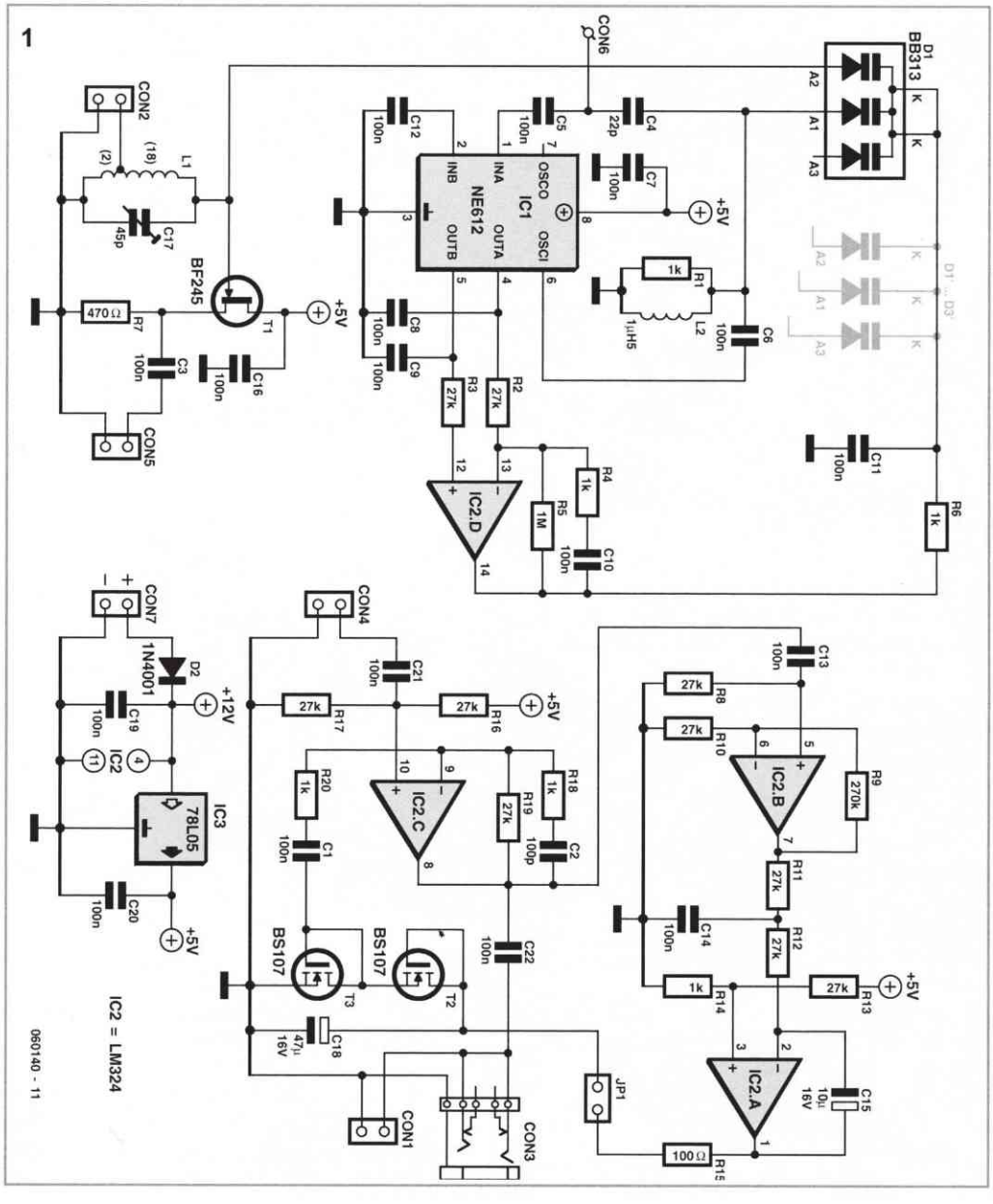

opamp which can provide up to 30 dB gain of the 12 kHz IF output signal to compensate for signal fading. Two VMOS transistors type BS107 are used as the controlling element where the drain-source current controls the internal resistance.

The finished PCB in **Figure 2** shows a neat circuit layout, coil L1 consists of 20 turns of 0.3 mm enamelled copper wire (ECW) with a tap at the second turn up from the ground end of the coil, it is wound on a 5 mm diameter coil former fitted with a screw-in ferrite slug.

The regulated output signal is available at connector CON1 and the stereo jack socket CON3. This PCB is connected to the receiver PCB via connectors CON4 to CON7, jumper

2a

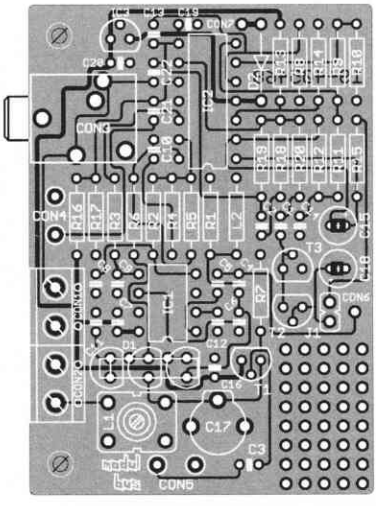

100%

2b

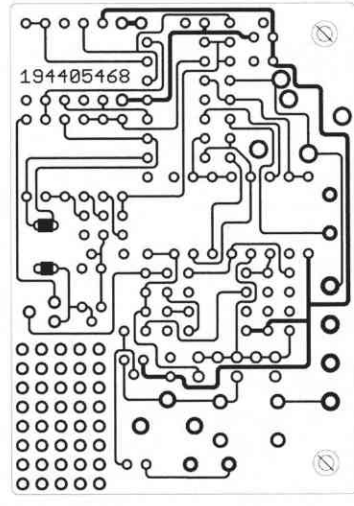

100%

JP1 can be removed to disconnect the AGC signal.

The automatic preselector requires a small amount of alignment to achieve optimum performance. Firstly tune the preselector to a station at the low frequency end of the scale and adjust the ferrite slug in L1 for maximum signal strength. Next tune in to a strong station at the upper end around 15 MHz and adjust trimmer C17 for maximum output signal. These two alignment points give a good synchronisation performance across the entire tuning range. The highest frequency which can be tuned depends on the voltage level on the varicaps so it is important to use a 12 V mains adapter to achieve the widest possible tuning range. The receiver board uses a 9 V adapter and this limits the upper frequency range.

(060140-1)

COMPONENTS LIST

Resistors
R1, R4, R6, R14, R18, R20 = 1 kΩ
R2, R3, R8, R10-R13, R16,R17,R19 = 27 kΩ
R5 = 1 MΩ
R9 = 270 kΩ
R7 = 470 Ω
R15 = 100 Ω

Capacitors
C1, C3, C5-C14, C16, C19-C22 = 100 nF
C2 = 100 pF
C4 = 22 pF
C15 = 10 µF 16V radial
C17 = 45 pF trimmer
C18 = 47 µF 16V radial

Semiconductors
D1 = BB313 or 3 × BB112
D2 = 1N4001
T1 = BF245
T2, T3 = BS107, BS170
IC1 = NE612
IC2 = LM324
IC3 = 78L05

Miscellaneous
J1 = Jumper
CON1, CON2 = 2-way PCB terminal block, lead pitch 5mm
CON3 = 3.5 mm jack socket
CON4, CON5 = pinheader or wires
CON6,CON7 = solder pin ∅ 1 mm
L1 = inductor former with core (Conrad Electronics # 516651) and ECW 0.3 mm
L2 = 2µH2 fixed inductor

PCB, ref. 060140-1 (see *www.elektor.com*)

Suggested kit supplier: *www.geistelectronic.de*

Ready built and tested units from: *www.modul-bus.de*

089 Fog Lamp Sensor

MISCELLANEOUS ELECTRONICS AND DESIGN IDEAS

Harrie Dogge

For several years now, a rear fog lamp has been mandatory for trailers and caravans in order to improve visibility under foggy conditions.
When this fog lamp is switched on, the fog lamp of the pulling vehicle must be switched off to avoid irritating reflections. For this purpose, a mechanical switch is now built into the 13-way female connector in order to switch off the fog lamp of the pulling vehicle and switch on the fog lamp of the trailer or caravan.
For anyone who uses a 7-way connector, this switching can also be implemented electronically with the aid of the circuit illustrated here.
Here a type P521 optocoupler detects whether the fog lamp of the caravan or trailer is connected. If the fog lamp is switched on in the car, a current flows through the caravan fog lamp via diodes D1 and D2. This causes the LED in the optocoupler to light up, with the result that the phototransistor conducts and energises the relay via transistor T1. The relay switches off the fog lamp of the car.
For anyone who's not all thumbs, this small circuit can easily be built on a small piece of perforated circuit board and then fitted somewhere close to the rear lamp fitting of the pulling vehicle.

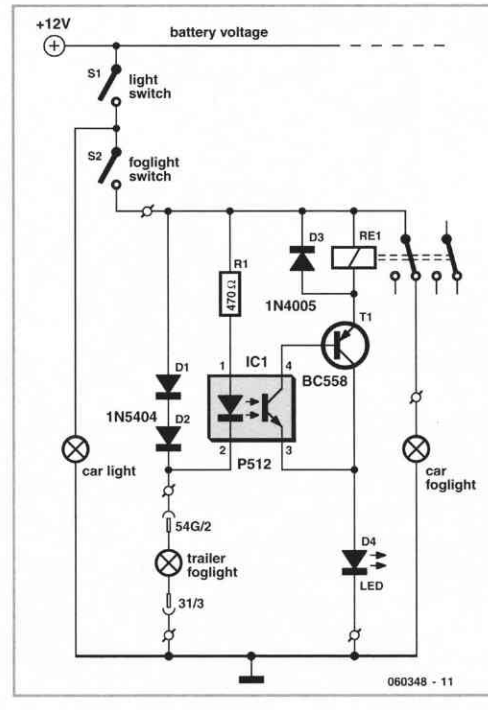

(060384-1)

090 Geiger Counter

TEST AND MEASUREMENT

Malte Fischer

April this year was the twentieth anniversary of the Chernobyl reactor accident. In the days following the incident winds deposited much of the reactor contents across central Europe, Scandinavia and the UK. A large area surrounding the reactor is still off limits but just how much of the fallout is still lying around on our gardens and farmlands? At the time of the release Iodine 131 was responsible for many cases of thyroid cancer but with a half life of 8.1 days this does not pose much of a threat in the long term. Strontium 90 is more of a problem; it has a half life of 28 years and more than 50 % of the fallout still remains. Ra-

dio caesium affects the food chain and can contaminate milk, meat and to a lesser extent crops.
Radioactivity is invisible so a detector is needed before we can start to make any measurements; the most common and simplest detector type is the Geiger counter.

The design described here uses two NE555 type timer ICs, a small mains transformer and a few other standard components to make a low cost and simple to build Geiger counter.

The only fly in the ointment is likely to be locating a Geiger- Mueller (GM) tube; this is not in any way a standard component. The on-line auction site eBay may provide a source of new or used counter tubes or alternatively Google will be useful in identify stockists. A brand new type ZP1300 tube can be purchased from ALRAD [1] at a cost of £55.00 plus VAT. The GM tubes are listed under nuclear products and nucleonics.

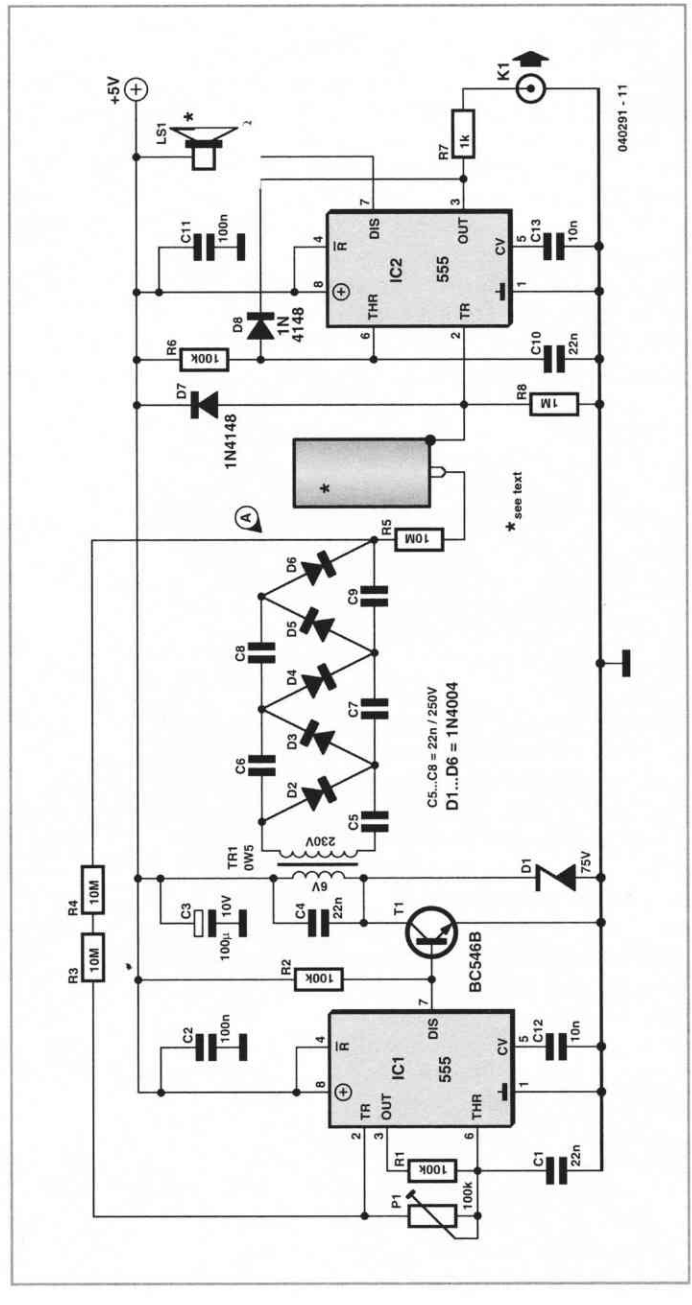

The counter tube requires a high voltage in the region of 700 V. IC1 is a NE555 timer configured as an astable multivibrator switching the BC547C transistor which in turn drives the secondary winding of a 6 V mains transformer. An alternating voltage of around 250 V is produced at the primary side which is then multiplied by the classic voltage multiplier configuration consisting of cascaded capacitors and diodes to produce around 700 V_{DC}. The voltage is fed back to the timer input through resistors R3 and R4 to provide some stability of the output voltage.
The counter tube anode is connected to 700 V via a 10 MΩ protection resistor. In normal operation with no radiation detected

there will be no current flowing through the tube and gas filling. When a radiation source is brought close to the tube, ionising radioactive rays pass through it and collide with some gas atoms knocking a few electrons out of their shell; this produces a current pulse from the tube terminal which in turn generates a voltage pulse across the 1 MΩ resistor high enough to trigger IC2. The NE555 effectively amplifies the pulse to produce the familiar tick-tick sound of a Geiger counter from the speaker LS1. An external pulse counter can be connected to K1.

(040291-1)

[1] *www.alrad.co.uk*

[2] *www.centronic.co.uk*

A copy of an original Philips Geiger tube data sheet is available at *http://sbarth.dynds.org/seiten/geigerzaehler/18550.pdf*.

Philips tubes are now made by Centronic [2] and their site contains a useful Geiger selection guide.

091 RFID Door Opener

HOME AND GARDEN

Ralf Künstler

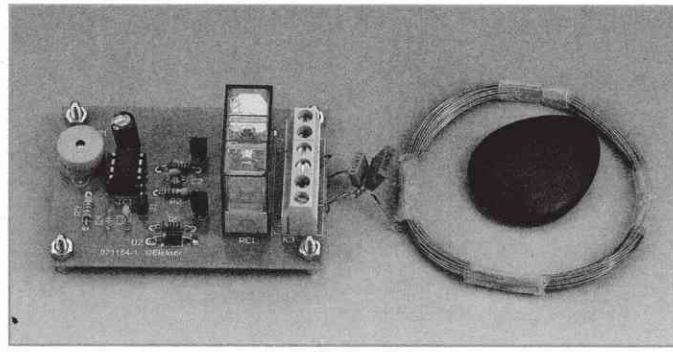

The RFID-based project described here employs a specially-programmed IC from the 'SFChip' (the 'SF' stands for 'Special Function') product family. The SF6107 [1] is an IC designed to work as an RFID receiver for tags that operate on a nominal frequency of 125 kHz. Tags (or, more properly, 'transponder cards') compatible with the EM4102 contain forty bits of data and are available for a pound or two each.

The support circuitry required for the SF6107 consists of just a couple of passive components, two transistors, a handwound coil and, if desired, a DC buzzer. As the circuit diagram shows, a complete door opener, capable of recognising a master RFID tag and learning the codes of up to twenty further tags, is not very complicated at all.

The IC drives the coil via pin 3 and T1. Together with C1, the coil forms a parallel resonant circuit. The cable linking the main electronics and the coil can be up to 80 cm long. If the coil is reasonably well adjusted, tags can be read at distances of up to about 3 cm.

The voltage across the coil is demodulated by D2 and then passes via C3 to pin 6 on the IC. An RFID tag in the vicinity of the coil absorbs energy from the field produced by the coil and uses it to subsequently transmit its stored ID code. The IC compares this code against the values it has registered in its memory. If there is a match, T2 is driven on, which in turn activates the relay and then the door lock electromagnet.

Simultaneously the IC emits the ID code of the recognised tag in serial format on pin 2.

Alternatively, for audio feedback a piezo buzzer can be connected to this pin. The buzzer will sound whenever the card that is being held next to the coil is recognised.

After the IC is reset (either when power is applied or by taking pin 1 briefly down to ground) the IC emits status information on pin 2. This consists of a list of the stored transponder ID codes preceded by their count. In the case of one master tag and two additional tags, the following might be output:

#T3
#R00:CC00154423
#R01:CC00154427
#R02:CC00154434

Each line is terminated by a 'CR' and an 'LF'. The first line gives the count of stored tag ID codes. There follow the individual ID codes, starting with the master tag. Each ID code consists of ten hexadecimal digits, making a total of 40 bits. The data transfer format is 9600 baud, 8 data bits, no parity and one stop bit. If a piezo buzzer has been connected to pin 2 it will emit a strange sound during any serial activity.

If, instead of the piezo buzzer, a 10 kΩ pulldown resistor is connected to pin 2, the signal output will be suitable for connecting directly to pin 2 of a 9-way sub-D socket, which can then be taken to a PC using

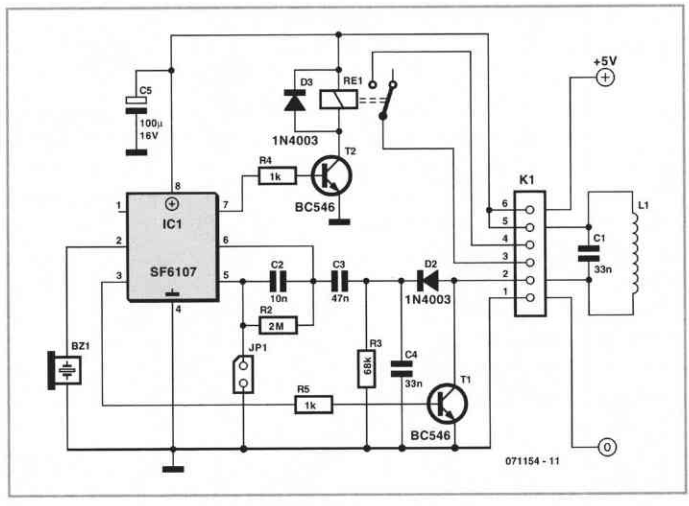

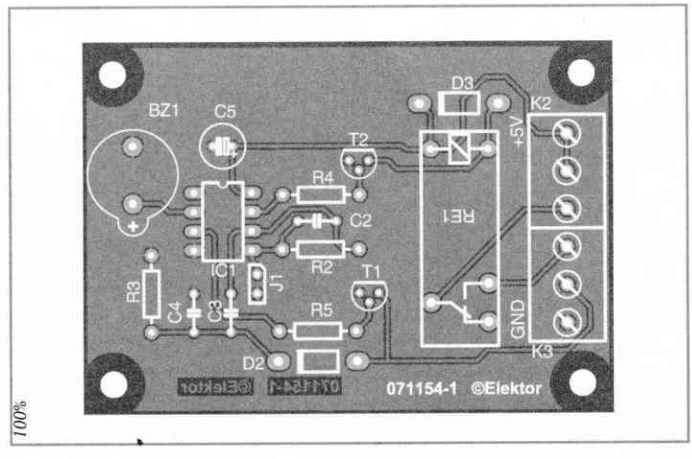

100%

COMPONENTS LIST

Resistors
R2 = 2 MΩ (or 2MΩ2)
R3 = 68 kΩ
R4, R5 = 1 kΩ

Capacitors
C1*, C4 = 33 nF
C2 = 10 nF
C3 = 47 nF
C5 = 100 µF 25V

Semiconductors
D2, D3 = 1N4003
T1, T2 = BC546*
IC1 = SF6107 (*www.sfchip.de*)

Miscellaneous
J1 = 2-way pinheader with jumper
BZ1 = piezo buzzer
K2, K3 = 3-way PCB terminal block, lead pitch 5mm
Re1 = relay, 5V, type V23057*
L1 = 100 µH inductor (30 turns 0.5mm ECW, 55mm diameter*
PCB, # 071154-1 from Elektor Shop or *www.thepcbhop.com*

* see text

an ordinary serial cable. If, on the other hand, the serial output is to be taken directly to a microcontroller without level-shifting, a 10 kΩ pull-up resistor should be connected A to pin 2. The IC checks which resistor is present at start-up and inverts its serial output if necessary.
Use the following procedure to erase all the stored ID codes prior to reprogramming:

1 Switch the unit off
2 Fit JP1 (this pulls pin 5 to ground)
3 Switch the unit on
4 Wait ten seconds
5 Switch the unit off
6 Remove JP1

Now a master tag (any RFID card) can be read and its ID stored. Hold the tag up to the coil. Then take it away and bring it up a second time: if the relay is activated then this means that the card has been successfully programmed as the master and its ID code has been stored.

To program further tags into the unit it is necessary to switch it into programming mode. This is done by holding the master tag up to the coil for around one minute. There then follows a twenty-second time window during which further tags can be programmed. Programming mode can be reentered as above to store further tag IDs, up to a maximum of twenty (plus the master tag).

The circuit can be constructed using the printed circuit board shown, whose layout is available for download from the Elektor website. Current consumption with the relay off is around 16 mA. If a more powerful relay is to be used, drawing more than 100 mA of coil current from the 5 V supply, a BC337 should be used for T1.

For optimum tag reading reliability and range the parallel resonant circuit consisting of the coil and capacitor should have as high a Q (quality) factor as possible. Coils made from 0.5 mm enamelled copper wire on a diameter of between 50 mm and 60 mm have given good results. These dimensions are not particularly critical, but it is important that the resonant frequency of the circuit is as close to the operating frequency of 125 kHz as possible.

In our prototype we measured the inductance of a 30-turn coil with a diameter of 55 mm at about 100 μH. It was possible to read RFID tags with values of C1 between about 47 nF and 14 nF, corresponding to resonant frequencies of 71 kHz to 133 kHz.

It is not necessary to have an oscilloscope to adjust the resonant frequency and Q factor. An ordinary digital voltmeter measuring the voltage across capacitor C4 (or at the cathode of D2) will do. Different values for C1 can be tried: the higher the measured voltage, the better. With the correct capacitance voltages of more than 8 V are possible.
After these measurements have been carried out and the tag IDs have been programmed into the unit, further tests can be carried out making small adjustments to C1 to obtain maximum reading range.

(071154-I)

Web Link
[1] SF6107 information (in German):
www.smatronic.mine.nu/SF6107.htm

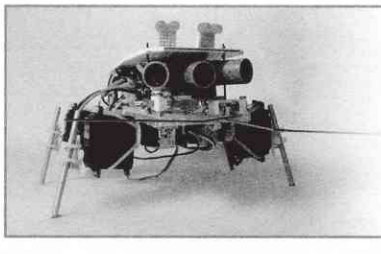

Machine-power starting on page 340!
91 robot-circuits, -ideas, -tips and more...

092 Expansion for Universal Interface

Roland Plisch

The 'Universal Interface for Windows' designed by Burkhard Kainka (Elektor December 1999 Supplement, page S2) provides for a range of input interfaces along with eight digital outputs, all under direct control of a PC's serial port. The program (available for free download from co.uk under 'Magazine') uses the TXD signal to clock eight data bits from the DTR signal into a 4094 shift register.

On the positive-going edge of the RTS strobe it transfers these bits simultaneously to its outputs. This arrangement can easily be extended by adding further shift registers in cascade, allowing data words of (in theory) any desired size to be built up byte by byte.

1

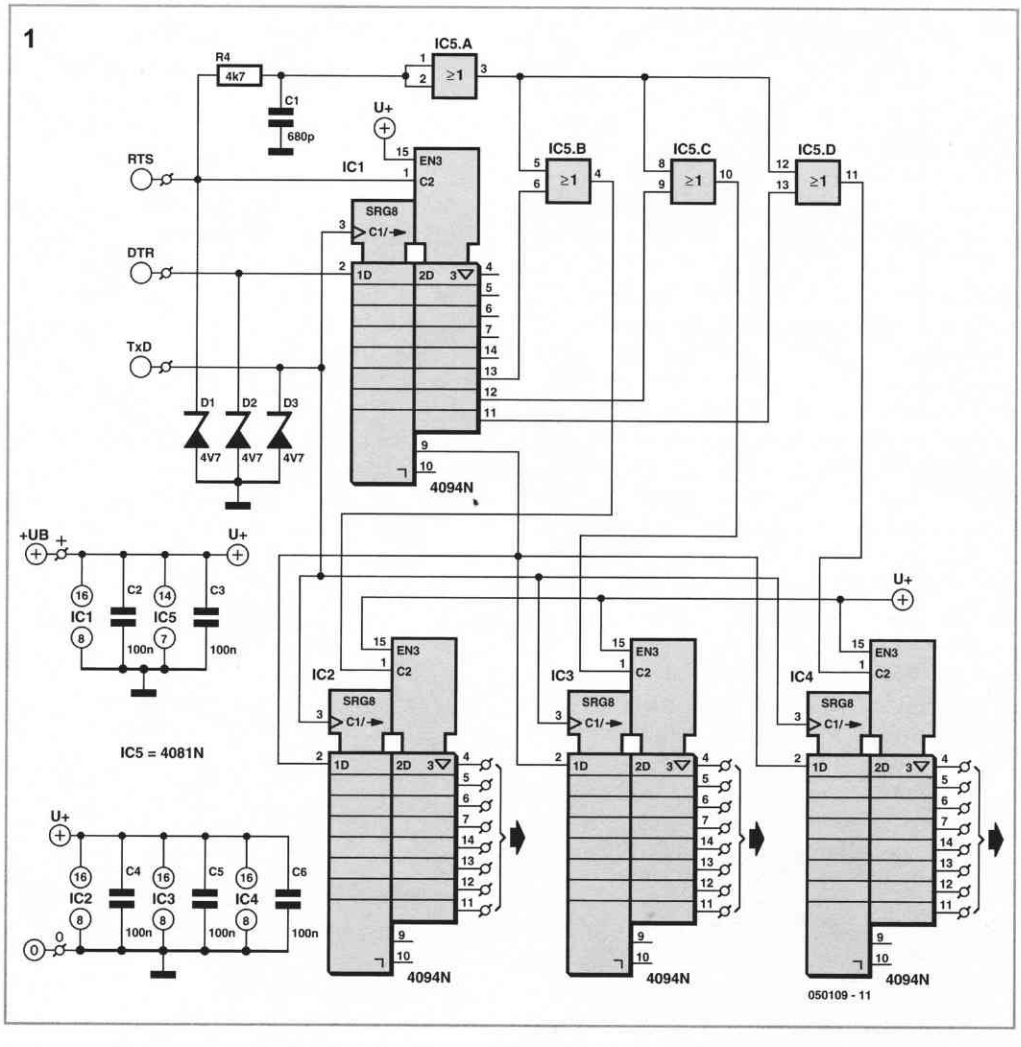

The circuit in **Figure 1** shows shift register IC1 connected as before to the PCs interface. The serial data pass through this device first, and then, via its serial cascade output (pin 9) to three further 4094s. The last (i.e., eighth) bit of the shift register appears on this cascade pin.

The three shift registers IC2, IC3 and IC4 receive their strobe pulses, slightly delayed by R4 and C1, via AND gates IC5.B, IC5.C and IC5.D when the corresponding output (Q6, Q7 and Q8 respectively) of the first shift register is active. The software sends a 16-bit word containing the address and a data byte in a single transfer. For example, to select Q6 and hence IC2, it is necessary simply to add 2048 to the eight-bit data value; for IC3 add 4096, and for IC4 add 8192.

The circuit can be extended in similar fashion using the spare outputs of IC1 (pin 4 to pin 7 and pin 14) to control further 4094s.

(050109-1)

093 Cigarette-lighter Battery Charger

POWER SUPPLIES, BATTERIES AND CHARGERS

B. Broussas

This fine Summer's day, you've decided to go out for a breath of fresh air – but without wanting to give up your 'hi-tech toys' – whether it's your son's radio-controlled car, your daughter's MP3 player (all borrowed of course after due negotations), or your own favourite portable DVD player. All these appliances share the feature of usually operating on rechargeable batteries – which is of course no problem when the mains is at hand, as they all come with their own chargers.

But the problem gets a bit more complicated out in the country, and as Murphy's Law has it, that's always just the moment you find your batteries are flat or nearly so. If your car is parked nearby, we can suggest a solution in the form of this very simple project – and what's more, it will cost you practically nothing, since it uses mostly components that any good electronics enthusiast is likely to already have in a drawer or the junk box. Even if you did have to buy everything, the whole thing shouldn't cost more than about £ 10.

As **Figure 1** shows, it's a project that smacks of good old-fashioned – we almost said granddad's – electronics, as it doesn't use a microcontroller, nor even the slightest spe-

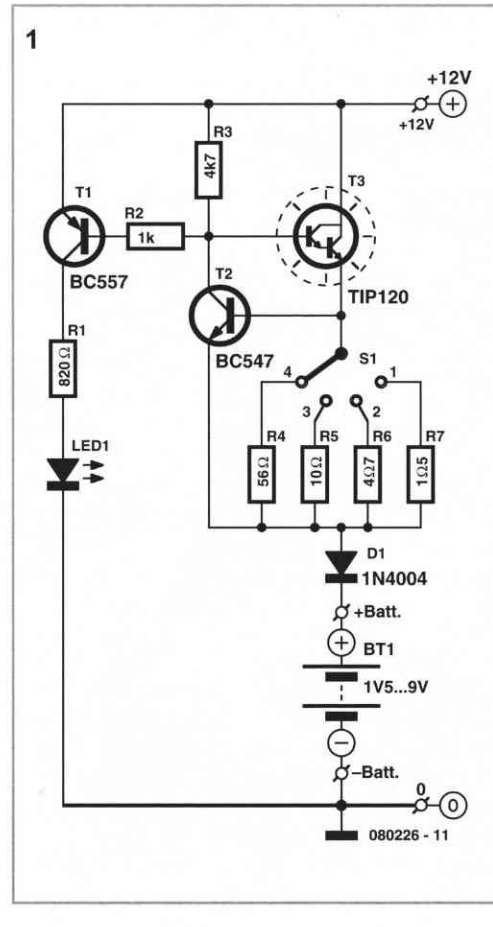

2

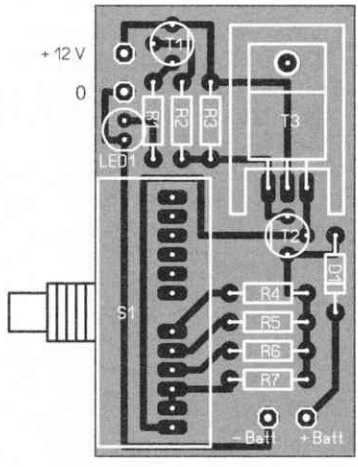

100%

COMPONENTS LIST

Resistors
R1 = 820 Ω
R2 = 1 kΩ
R3 = 4kΩ7
R4 = 56 Ω
R5 = 10 Ω
R6 = 4Ω7
R7 = 1Ω5

Semiconductors
D1 = 1N4004
LED1 = LED, red
T1 = BC557
T2 = BC547
T3 = TIP20

Miscellaneous
S1 = 1-pole 4-way rotary switch (see text)
4 solder pins
PCB, ref. 080226-1 from *www.thepcbshop.com*

cialized integrated circuit (IC). In spite of this, it will look after your batteries, especially if you are reasonable about the charging time.

Whether they are old nicads (NiCd) – becoming extinct these days because of their many shortcomings and toxicity – or the omnipresent nickel-metal-hydrides (NiMH), these types of battery have to be charged at constant current. This charging current should be 10% of their rated capacity (printed on the label) for a normal or slow charge, or a maximum of 100% of their capacity, if you want a fast charge.

So, to recharge the NiMH or NiCd batteries in our various portable devices from a car battery – for that's what it's all about – all you have to do is build a constant current generator. To achieve this takes just two common or garden transistors, T2 and T3. The latter is turned on to a greater or lesser extent by way of R3 and T2. By virtue of the very principle of transistors, there cannot be more than about 0.6 V between the base and emitter of T2. If this voltage tends to drop, T2 will tend to turn off, which will then increase the conduction of T3 – and vice-versa. In other words, the base-emitter voltage of T2 will virtually always remain at 0.6 V.

Now this voltage is produced by the current passing through one of the resistors R4–R7, and hence also the battery to be charged. So it's easy to see that this current is quite simply given by $I_{ch} = 0.6 / R$ where I_{ch} is the desired charging current and R is one of the resistors R4–R7.

As T2 turns on (and hence the battery is charging), transistor T1 increasingly saturates. If this current drops too much, or falls to zero in the event of a poor contact or faulty battery, the LED goes out to indicate a problem. Diode D1 protects the circuit from possible reversed polarity of the battery being charged.

We have designed a small PCB for this project with provision for direct mounting of a rotary switch to be mounted, thereby reducing the wiring needed to nothing. This switch is Lorlin part no. PT6422/BMH and is available, for example, from Farnell under product ref. 1123675. However any other equivalent may be used if it can be adapted to the circuit board. In most case, that means installing some extra wires between the PCB and the switch pole and contacts. Transistor T2 may be required to dissipate quite a lot of heat for

low-voltage batteries being charged at high currents, so space has been provided to fit it with a U-shaped heatsink. The various designed charging currents are 400, 130, 60, and 10 mA for positions 1–4 of the switch. The unavoidable voltage drop across T2 means the maximum voltage of the battery to be recharged cannot exceed 9.6 V.

If you want different charging currents from those designed, all you need do is simply replace one or other of R4–R7 by a resistor whose value has been calculated as above ($R = 0.6 / I_{ch}$) and whose power is given by $P = 0.36 / R$.

As a constant-current generator, the circuit is naturally protected against short-circuits, but do take care all the same if you increase the charging current too much not to exceed the maximum power dissipation in T3 (65 W) and more importantly, the power allowed by the small heatsink provided for on the PCB. A current of 500 mA seems to us a reasonable maximum value to not exceed. The value should cater for most NIMH and NiCd batteries if a few hours are allowed to charge them. But then it was a sunny day so that shouldn't be a serious concern.

(080226-I)

Downloads
The PCB copper track and component mounting plan can be downloaded from *www.elektor.com*; file #080226-1.zip

094 Hybrid Headphone Amp

AUDIO, VIDEO AND PHOTOGRAPHY

Jeff Macaulay

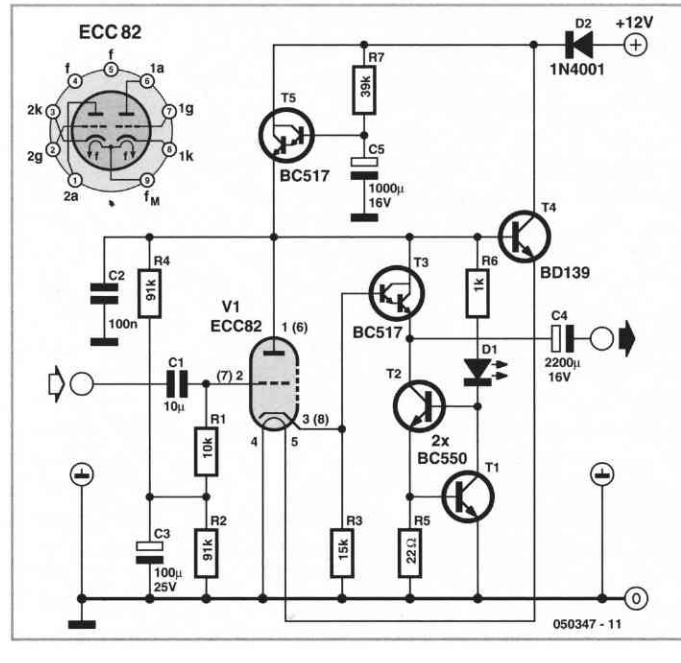

Potentially, headphone listening can be technically superior since room reflections are eliminated and the intimate contact between transducer and ear mean that only tiny amounts of power are required.

The small power requirement means that transducers can be operated at a small fraction of their full excursion capabilities thus reducing THD and other non-linear distortions.

This design of a dedicated headphones amplifier is potentially controversial in that (1) it has unity voltage gain and (2) employs valves and transistors in the same design. Normal headphones have an impedance of 32 Ω per channel. The usual standard line output of 775 mV to which all

quality equipment aspires will generate a power of

$$\frac{U^2}{R} = \frac{0{,}775^2}{32} = 18\,\text{mW}$$

per channel across a headphone of this impedance. An examination of available headphones at well known high street emporiums revealed that the sensitivity varied from 96 dB to 103db/mW! So, in practice the circuit will only require unity gain to reach deafening levels.

As a unity gain design is required it is quite possible to employ a low distortion output stage. The obvious choice is an emitter follower. This has nearly unity gain combined with a large amount of local feedback. Unfortunately the output impedance of an emitter follower is dependent upon the source impedance. With a volume control, or even with different signal sources this will vary and could produce small but audible changes in sound quality. To prevent this, the output stage is driven by a cathode follower, based around an ECC82 valve (US equivalent: 12AU7). This device, as opposed to a transistor configuration, enables the output stage to be driven with a constant value, low impedance. In other words, the signal from the low impedance point is used to drive the high impedance of the output stage, a situation which promotes low overall THD.

At the modest output powers required of the circuit, the only sensible choice is a Class A circuit. In this case the much vaunted single-ended output stage is employed and that comprises of T3 and constant current source T1- T2. The constant current is set by the Vbe voltage of T1 applied across R5. With its value of 22 Ω, the current is set at 27 mA. T3 is used in the emitter follower mode with high input impedance and low output impedance. Indeed the main problem of using a valve at low voltages is that it's fairly difficult to get any real current drain. In order to prevent distortion the output stage shouldn't be allowed to load the valve. This is down to the choice of output device. A BC517 is used for T3 because of its high current gain, 30,000 at 2 mA!

Since we have a low impedance output stage, the load may be capacitively coupled via C4. Some purists may baulk at the idea of using an electrolytic for this job but he fact remains that distortion generated by capacitive coupling is at least two orders of magnitude lower than transformer coupling.

The rest of the circuitry is used to condition the various voltages used by the circuit. In order to obtain a linear output the valve grid needs to be biased at half the supply voltage. This is the function of the voltage divider R4 and R2. Input signals are coupled into the circuit via C1 and R1. R1, connected between the voltage divider and V1's grid defines the input impedance of the circuit. C1 has sufficiently large a value to ensure response down to 2 Hz.

Although the circuit does a good job of rejecting line noise on its own due to the high impedance of V1's anode and T3's collector current, it needs a little help to obtain a silent background in the absence of signal. The 'help' is in the form of the capacitance multiplier circuit built around T5. Another BC517 is used here to avoid loading of the filter comprising R7 and C5. In principle the capacitance of C5 is multiplied by the gain of T5. In practice the smooth dc applied to T5's base appears at low impedance at its emitter. An important added advantage is that the supply voltage is applied slowly on powering up. This is of course due to the time taken to fully charge C5 via R7. No trace of hum or ripple can be seen here on the 'scope. C2 is used to ensure stability at RF.

The DC supply is also used to run the valve heater. The ECC82 has an advantage here in that its heater can be connected for operate from 12.6 V. To run it T4 is used as a series pass element. Base voltage is obtained from the emitter of T5. T4 has very low output impedance, about 160 mΩ and this helps to prevent extraneous signals being picked up from the heater wiring. Connecting the transistor base to C5 also lets the valve heater warm up gently. A couple of volts only are lost across T4 and although the device runs warm it doesn't require a heat-sink.

(050347-1)

095 Magnetic Flip-Flop

Bernhard Schnurr

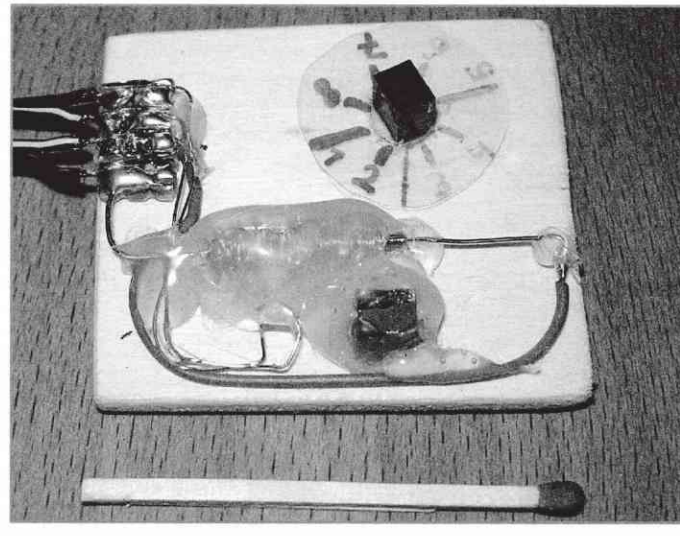

The sensitivity of a reed switch can be affected by the judicious nearby placement of small magnets. Also, reed switches exhibit a certain amount of hysteresis: there is a distinct difference between the level to which the magnetic field strength must rise for the switch to pull in and the level to which it must fall for the switch to drop out.

These properties in combination allow us to make an element with two stable states: a flip-flop. All we need is a permanent magnet strategically placed in the vicinity of the switch.

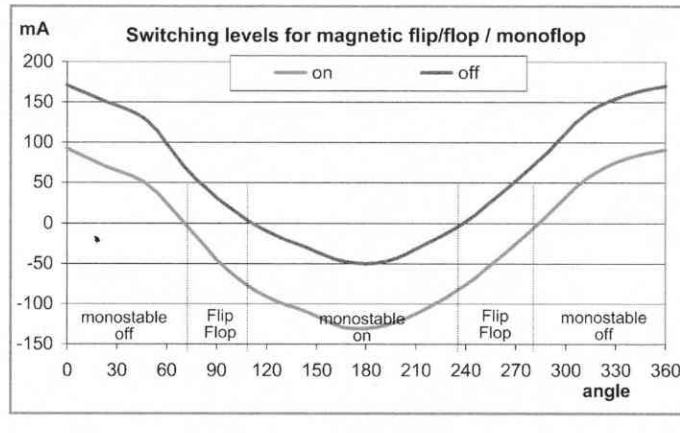

In practice getting the arrangement right is tricky, as the distance from the switch must be correct to within a fraction of a millimetre. However, once the right position is found, we have a bistable element that can be switched using either a second magnet or a small coil. The state of the element is preserved without power.

Since the adjustment required to achieve symmetrical behaviour is so critical, it is simplest to employ a second magnet, somewhat further away than the first. The behaviour of the system can be adjusted over a wide range by carefully rotating this second magnet, and it is now relatively easy to obtain reliable bistable operation.

The drive coil can be made using about a metre of enamelled copper wire wound using a 2.5 mm drill bit as a temporary former. The coil is then fixed at the most sensitive point along the reed switch. The prototype shown in the photograph switches with a coil current of approximately 40 mA.

It is also possible to obtain other behaviours. One possibility is a normally-on reed contact with the contact broken when the coil current

exceeds a certain value, forming a kind of electronic fuse. Equally, we can produce a normally-off contact which makes at a defined coil current: essentially a configurable relay. With the prototype shown we achieved switching currents of up to approximately 180 mA, and with the second magnet correctly adjusted it is possible to achieve switching currents down to just one milliamp.

The graph shows the points at which the reed switch changes state, as a function of the angle at which the second magnet is placed and on the coil current. The curve is not particularly smooth, as you might expect from genuine measured data.

Without the second magnet the contact pulls in at 63 mA and drops out at –17 mA.

(071158-I)

096 Intelligent Interface for 1 to 8 Servos

HOBBY AND MODELLING

Christian Tavernier

Today, radio-controlled (RC) servos are very common in robotics and there are often many present in one robot. In general, a hexapod utilizes at least three servos, while a simple arm can use between six or seven of them. If the control of such servos remains theoretically easy to produce with a microcontroller, having several within the same robot causes the microcontroller to overload very quickly, spending more time in the end managing servos than doing the calculations necessary to properly operate the robot.
In fact, we should remember that a radio control servo is operated with pulses whose width varies from 1 to 2 ms and defines its position. The problem is that these pulses must be repeated at least every 20 ms if we want the servo to stay in position. It is precisely this repetition, multiplied by the number of servos being controlled, that ends up overloading the microcontroller that controls them.

Therefore, we propose a fix for this problem using a specialised circuit capable of controlling one to eight standard radio control servos via very simple controls transmitted by a common asynchronous serial connection. We are referring to the MIC800 from Mictronics (*www.mictronics.com*). The application schematics could not be simpler.

Not counting a simple quartz crystal (X1) and the usual loading capacitors (C1 and C2), the circuit is directly connected to 1-8 servos it will control. Concerning the serial connection, three different possibilities are offered, depending on what's connected to points A and B are in the diagram:

- one direct connection when there is a TTL control signal from a microcontroller with a UART and capable of supplying serial signals in inverse logic (one Basic Stamp, for example);
- one 22 kΩ resistor, if there is a serial connection with true RS-232 levels;
- one transistor with inverted wiring in the case of TTL control by a microcontroller having a UART, but unable to provide serial signals in inverse logic (PICBasic, for example).

In fact, the MIC800 was designed in order to be directly controlled by any true serial RS232 connection. It thus accepts input signals in negative logic (a logic 1 corresponding to a Low level and vice versa). In the case of a direct TTL connection, and depending on the possibilities of the UART contained in the related microcontroller, it is sometimes impossible to generate such signals. Therefore, we must use an inverter transistor.

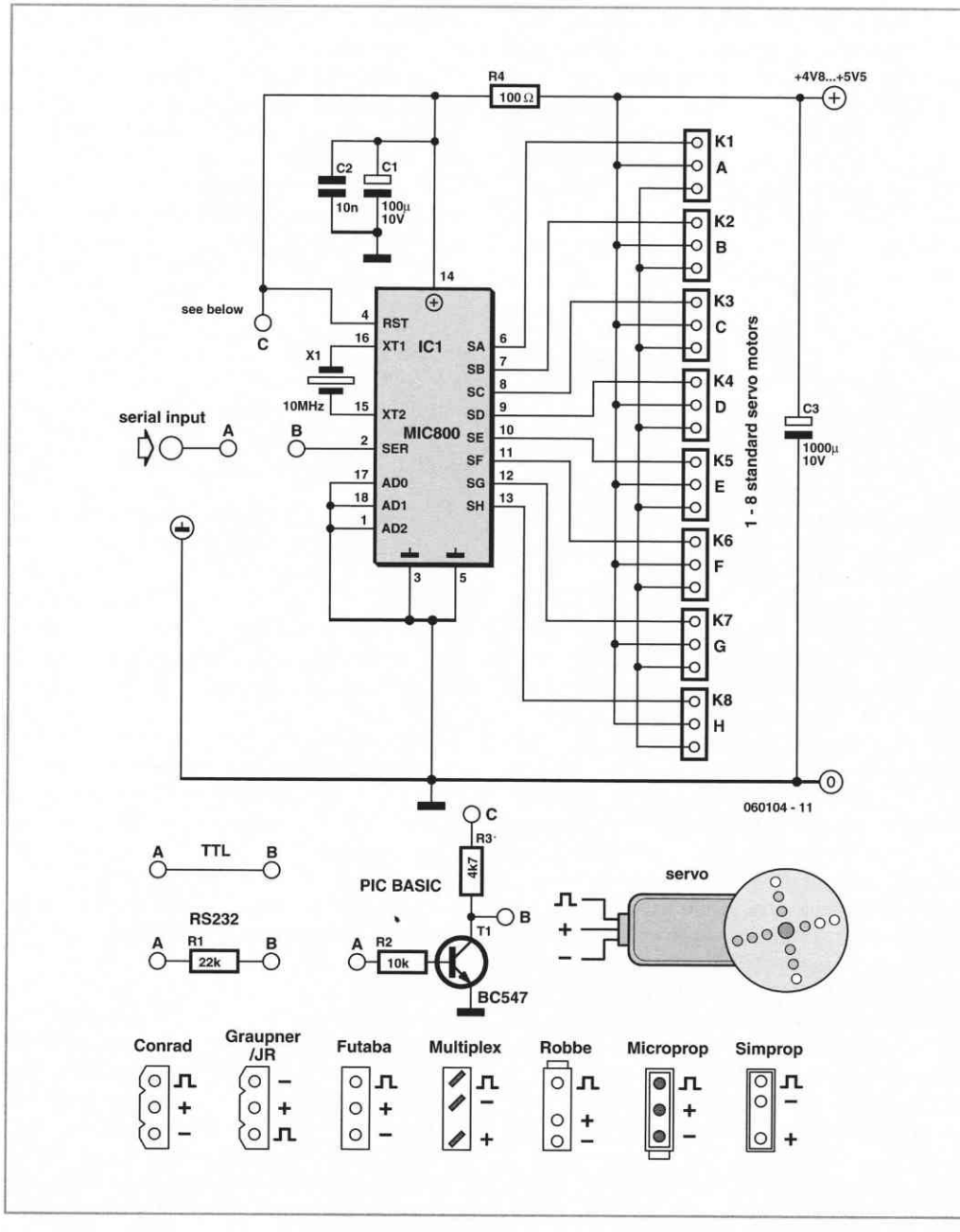

Dialogue with the MIC800 occurs at 2,400 baud on 8 data bits, without parity. The syntax of the commands to be sent for controlling the servos is extremely simple and is composed of the next group of coded characters in ASCII *m n xxx* where:

- *m* is a letter included between S and Z which corresponds to the MIC800 address. In fact, if you consult the datasheet available on the Mictronics site, you'll soon notice that you can place up to eight MIC800s on a single serial connector and

control up to 64 servos in this way. This option is not utilized here and the address is set to S using pin grounding AD0 to AD2.

- *n* stands for a letter between A and H indicating the servo to control in compliance with the marks, as indicated in our drawing at the connectors (K1 corresponding to A, and K8 to H).

- *xxx* is a number between 001 and 128 which indicates the position required for the servo, 001 corresponding to the extreme counter-clockwise position and 128 to the extreme position in the other direction.

From a Basic Stamp, all you need to do is write it as shown in the following example:

SEROUT Pin, 16780, ["S", "'X'", DEC Pos, CR]

where Pin is utilized for the serial port, X is the letter identifier of the servo included between A and H (K1 to K8) and Pos is the desired position included between 1 and 128. With a PICBasic (and the same text as below, we would write:

SEROUT Pin, 138, 0, 0, ["S", "X", DEC(Pos), 13]

After turning on the MIC800, all outputs of the servo control are inactive. Then, as soon as a command has been sent to a servo destination, the corresponding output automatically generates the pulses required to maintain its position as long as the circuit remains on.

www.tavernier-c.com (060104-1)

097 Intelligent Presence Simulator

HOME AND GARDEN

C. Tavernier

However effective a domestic alarm system may be, it's invariably better if it never goes off, and the best way to ensure this is to make potential burglars think the premises are occupied. Indeed, unless you own old masters or objects of great value likely to attract 'professional' burglars, it has to be acknowledged that the majority of burglaries are committed by 'petty' thieves who are going to be looking more than anything else for simplicity and will prefer to break into homes whose occupants are away.

Rather than simply not going on holiday – which is also one solution to the problem (!) – we're going to suggest building this intelligent presence simulator which ought to put potential burglars off, even if your home is subjected to close scrutiny.

Like all its counterparts, the proposed circuit turns one or more lights on and off when the ambient light falls, but while many devices are content to generate fixed timings, this one works using randomly variable durations. So while other devices are very soon caught out simply by daily observation (often from a car) because of their too-perfect regularity, this one is much more credible due to the fact that its operating times are irregular.

The circuit is very simple, as we have employed a microcontroller – a 'little' 12C508 from Microchip, which is more than adequate for such an application. It is mains powered and uses rudimentary voltage regulation by a zener diode. A relay is used to control the light(s); though this is less elegant than a triac solution, it does avoid any interference from the mains reaching the microcontroller, for example, during thunderstorms. We mustn't forget this project needs to work very reliably during our absence, whatever happens.
The ambient light level is measured by a conventional LDR (light dependent resistor), and the lighting switching threshold is adjustable

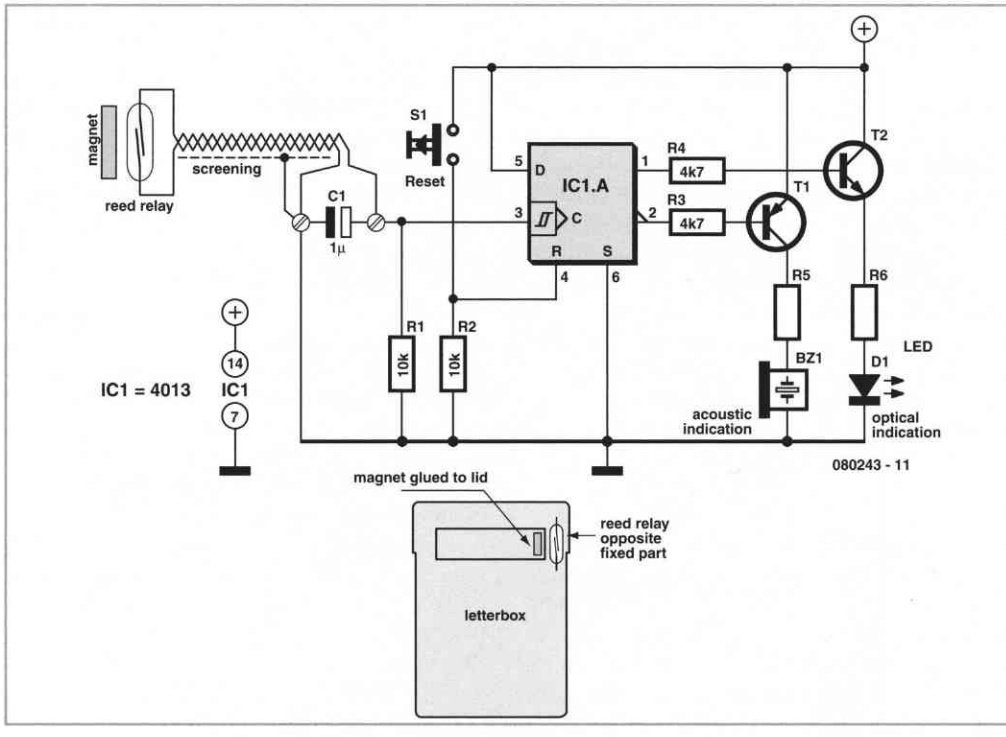

COMPONENTS LIST

Resistors
R1 = 1 kΩ 500mW
R2 = 4kΩ7
R3 = 560 Ω
R4, R6 = 10 kΩ
R5 = 7kΩ5
R 7 = LDR
R8 = 470 kΩ to 1 MΩ
P1 = 470 kΩ potentiometer

Capacitors
C1 = 470 µF 25V
C2 = 10 µF 25V
C3 = 1nF5
C4 = 10 nF

Semiconductors
D1, D2 = 1N4004
D3 = diode zener 4V7 400 mW
LED1 = LED, red
D4 = 1N4148
T1 = BC547
IC1 = PIC12C508, programmed, see Downloads

Miscellaneous
RE1 = relay, 10A contact
S1 = 1-pole 3-way rotary switch
F1 = fuse 100 mA
TR1 = Mains transformer 2x9 V, 1.2-3 VA
4 PCB terminal blocks, 5 mm lead pitch
5 solder pins
PCB, ref. 080231-I from *www.thepcbshop.com*

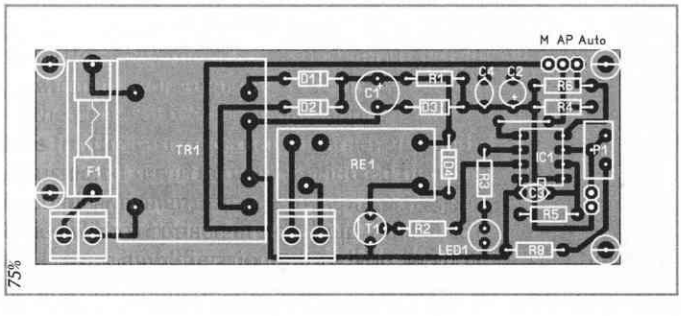

via P1 to suit the characteristics and positioning of the LDR. Note that input GP4 of the PIC12C508 is not analogue, but its logic switching threshold is very suitable for this kind of use. The LED connected to GP1 indicates the circuit's operating mode, selected by

grounding or not of GP2 or GP3 via override switch S1. So there are three possible states: permanently off, permanently on, and automatic mode, which is the one normally used. Given the software programmed into the 12C508 ('firmware') and the need to generate very long delays so as to arrive at lighting times or an hour or more, it has been necessary to make the MCU operate at a vastly reduced clock frequency. In that case, a crystal-controlled clock is no longer suitable, so the R-C network R5/C3 is used instead. For sure, such a clock source is less stable than a crystal, but then in an application like this, that may well be what we're after as a degree of randomness is a design target instead of a disadvantage.

Our suggested PCB shown here takes all the components for this project except of course for S1, S2, and the LDR, which will need to be positioned on the front panel of the case in order to sense the ambient light intensity. The PCB has been designed for a Finder relay capable of switching 10 A, which ought to prove adequate for lighting your home, unless you live in a replica of the Palace of Versailles.
The program to be loaded into the 12C508 is available for free download from the Elektor website as file number 080231-11.zip or from the author's own website.
On completion of the solder work the circuit should work immediately and can be checked by switching to manual mode. The relay should be released in the 'off' position and energized in the 'on' position. Then all that remains is to adjust the day night threshold by adjusting potentiometer P1. To do this, you can either use a lot of patience, or else use a voltmeter – digital or analogue, but the latter will need to be electronic so as to be high impedance – connected between GP4 and ground.
When the light level below which you want the lighting to be allowed to come on is reached, adjust P1 to read approximately 1.4 V on the voltmeter. If this value cannot be achieved, owing to the characteristics of your LDR, reduce or increase R8 if necessary to achieve it (LDRs are known to have rather wide production tolerances).
Equipped with this inexpensive accessory, your home of course hasn't become an impregnable fortress, but at least it ought to appear less attractive to burglars than houses that are plunged into darkness for long periods of time, especially in the middle of summer.

www.tavernier-c.com (080231-I)

Downloads
The PCB layout can be downloaded free from our website *www.elektor.com*; file # 080231-1.
The source code and .hex files for this project are available free on *www.elektor.com*; file # 080231-11.zip.

098 Protection for Telephone Line

HOME AND GARDEN

Christian Tavernier

A long time ago when telephones were so simple almost nothing could go amiss from an electrical point of view, Telecom operators installed surge protection on all telephone lines exposed to storm risks. Paradoxically, now that we are hooking up delicate and expensive equipment such as telephones filled with electronics, fax machines, (A)DSL modems, etc., this protection has disappeared.
However, if you have the good fortune to live in the countryside in a building served by overhead telephone lines, there's an obvious risk of very high voltages being induced on the lines during thunderstorms. While we have lost count today of all of the modems, fax machines and other telephones that have

been destroyed by a 'bolt of lightning', surprisingly you only have to invest a few pounds to get a remarkably efficient protection device like the one we are proposing here.
During a storm, often with lightning striking near a telephone line, the line carries transient voltages up to several thousands of volts. Contrary to the HV section of television sets or electrical fences, on which practically no current is running, in the case of lighting striking current surges of thousand of amps are not uncommon.
To protect oneself from such destructive pulses, traditional components are not powerful or fast enough. As you can see on our drawing, a (gas-filled) spark gap should be used. Such a component contains three electrodes, insulated from each other, in an airtight cylinder filled with rare gas. As long as the voltage present between the electrodes is below a certain threshold, the spark gap remains perfectly passive and presents an impedance of several hundreds of MΩ. On the other hand, when the voltage rises above this threshold, the gas is very rapidly ionized and the spark-gap suddenly becomes a full conductor to the point of being able to absorb colossal currents without being destroyed. The one we are using here, whose size is of the same magnitude as an ordinary one watt resistor, can absorb a standardized 5,000 amps pulse lasting 8/20 ms!
Since we are utilizing a three-electrode spark gap, the voltage between the two wires of the line or between any wire and ground, cannot exceed the sparking voltage, which is about 250 volts here. Such protection could theo-

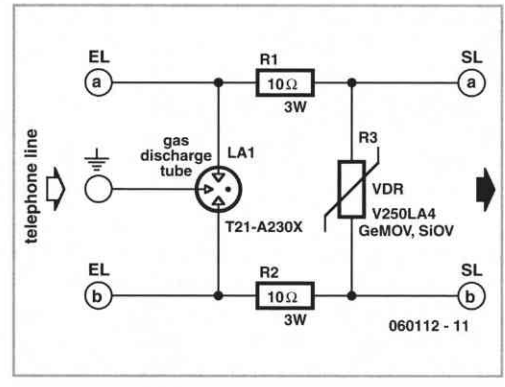

retically suffice but we preferred to add a second security device made with a VDR (GeMOV or SiOV depending on the manufacturer), which also limits the voltage between line wires to a maximum of 250 volts. Even if this value seems high to you, we should remember that all of the authorized telephone equipment, carrying the CE mark must be able to withstand it without damage.
Since pulses generated by lightning are very brief, the ground connection of our assembly must be as low-inductance as possible. It must therefore be short, and composed of heavy-duty wire (1.5 mm^2 c.s.a. is the minimum). If not, the coil, composed of the ground connection, blocks the high frequency signal that constitutes the pulse and reduces the assembly's effectiveness to nothing.
Finally, please note that this device obviously has no effect on the low frequency signals of telephones and fax machines and it does not disturb (A)DSL signals either.

(060112-1)

099 Mini Bench Supply

POWER SUPPLIES, BATTERIES AND CHARGERS

Alexander Mumm

Every electronics engineer is familiar with the anxiety of the moment when power is first applied to a newly-built circuit, wondering whether hours of work are about to be destroyed in a puff of smoke. A highquality power supply with an adjustable current limit function is an excellent aid to steadying the nerves.
Unfortunately power supplies with good regulation performance are expensive and

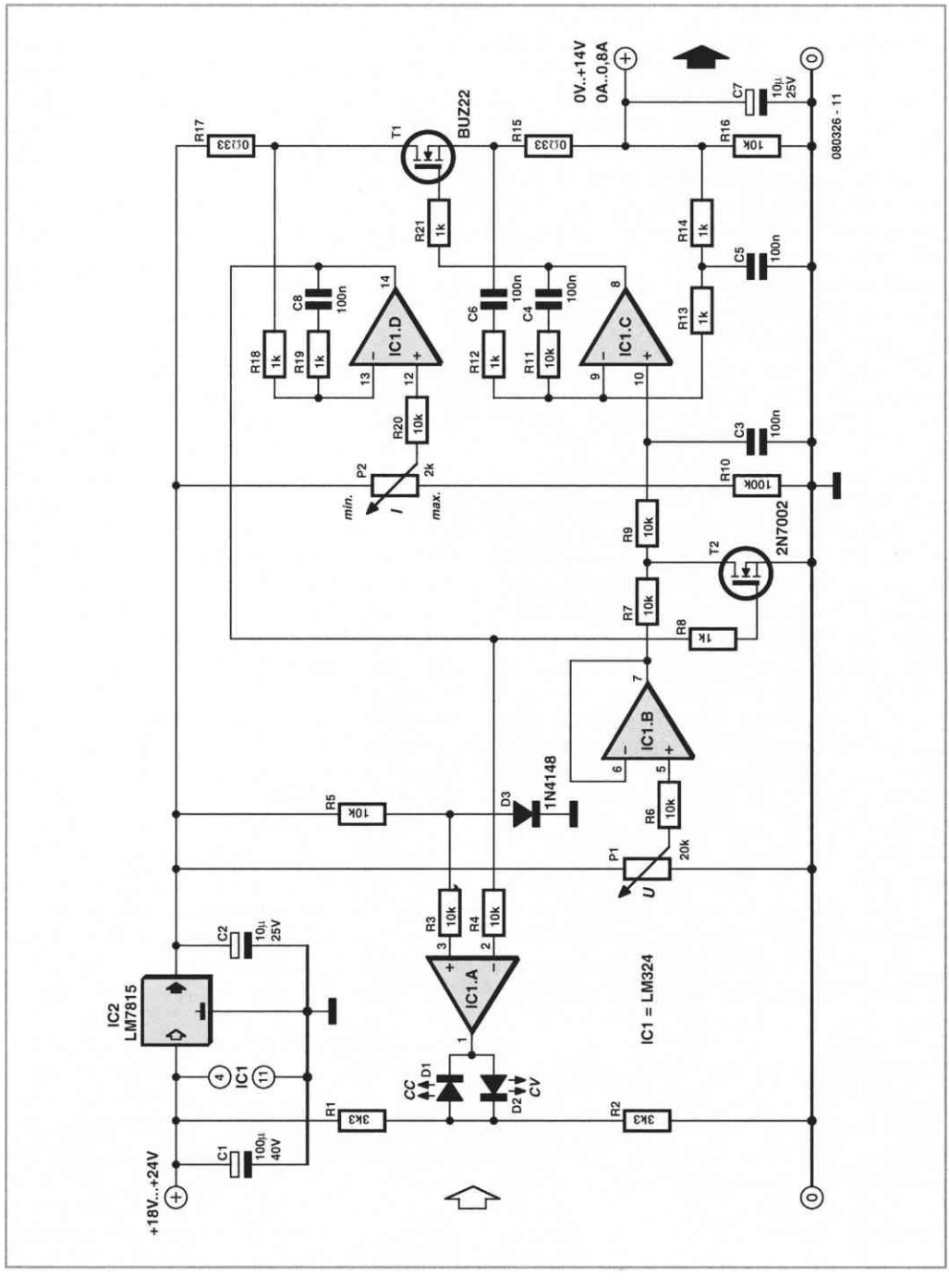

homebrew construction is not always straightforward. Many of the 'laboratory power supplies' currently on the market are low-cost units based on switching regulators which, although certainly capable of delivering high currents, have rather poor ripple per-

formance. Large output capacitors (which, in the case of a fault, will discharge into your circuit) and voltage overshoot are other problems.

The power supply described here is a simple unit, easily constructed from standard components. It is only suitable for small loads but otherwise has all the characteristics of its bigger brethren. Between 18 V and 24 V is applied to the input, for example from a laptop power supply. This avoids the need for an expensive transformer and accompanying smoothing. No negative supply is needed, but the output voltage is nevertheless adjustable down to 0 V.

A difficulty in the design of power supplies with current limiting is the shunt resistor needed to measure the output current, normally connected to a differential amplifier. Frequently in simple designs the amplifier is not powered from a regulated supply, which can lead to an unstable current regulation loop. This circuit avoids the difficulty by using a low-cost fixed voltage regulator to supply the feedback circuit with a stable voltage. This arrangement greatly simplifies current measurement and regulation.

To generate this intermediate supply voltage we use an LM7815. Its output passes through R17, which measures the output current, to MOSFET T1 which is driven by the voltage regulation opamp IC1C. Here R11 and C4 determine the bandwidth of the control loop, preventing oscillation at high frequencies. R15 ensures that capacitive loads with low effective resistance do not make the control loop unstable. The negative feedback of AC components of the current via R12 and C5 makes the circuit reliable even with a large capacitor at its output, and negative feedback of the DC component is via the low-pass filter formed by R14 and C6. This ensures that the voltage drop across R15 is correctly compensated for. C7 at the output provides a low impedance source for high-frequency loads, and R16 provides for the discharge of C17 when the set voltage is reduced with no load attached.

Current regulation is carried out by IC1D. Again to ensure stability, the bandwidth of the feedback loop is restricted by R19 and C8. If the voltage dropped across R17 exceeds the value set by P2, the current limit function comes into action and T2 begins to conduct. This in turn reduces the input voltage to the voltage regulation circuit until the desired current is reached. R7, R9 and C3 ensure that current regulation does not lead to output voltage overshoots and that resonance does not occur with inductive loads.

The controls of the power supply are all voltage-based. This means, for example, that P1 and P2 can be replaced by digitalto-analogue converters or digital potentiometers so that the whole unit can be driven by a microcontroller. IC1B acts as a buffer to ensure that the dynamic characteristics of the circuit are not affected by the setting of P1.
IC1A is used as a comparator whose output is used to drive two LEDs that indicate whether the supply is in voltage regulation or current regulation mode. If D2 lights the supply is in constant voltage mode; if D1 lights it is in constant current mode, for example if the output has been shortcircuited. The power supply thus boasts all the features of a top-class bench supply.
IC1A and its surrounding circuitry can be dispensed with if the mode indication is not wanted.
A type LM324 operational amplifier is suggested as, in contrast to many other similar devices, it operates reliably with input voltages down to 0 V. Other rail-to-rail opamps could equally well be used. The particular n-channel MOSFET devices used are not critical: a BUZ21, IRF540, IRF542 or 2SK1428 could be used for T1, for example, and a BS170 could be used in place of the 2N7002. The capacitors should all be rated for a voltage of 35 V or higher, and R15 and R17 must be at least 0.5 W types. The fixed voltage regulator and T1 must both be equipped with an adequate heatsink. If they are mounted on the same heatsink, they must be isolated from it as the tabs of the two devices are at different potentials.

(080326-I)

100 RC Servo Tester/Exerciser

HOBBY AND MODELLING

Ray King

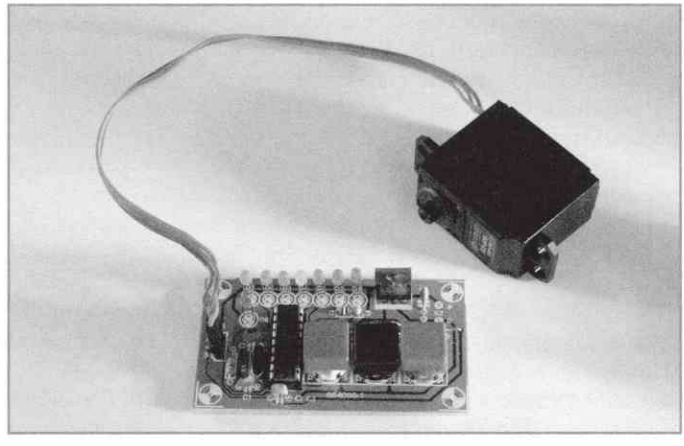

The design presented here is for a device for testing radio control (RC) servos. The present design has features that make it especially useful to people designing and building radio control equipment.

By building a number of these devices in a single enclosure an entire radio controlled model can be set up and tested without having to actually use the RC transmitter. The most unusual feature of this design is that it doesn't use a joystick or similar analogue device to determine the servo position. Instead it gives an output of precisely 1.5 ms that can be changed up or down in steps of 0.166 ms and gives a display on a line of LEDs of the position selected.

This is of particular use if you are designing and testing radio control devices that use the receiver output directly, enabling a known pulse width to be applied without resorting to using an oscilloscope.

With this facility the devices can be calibrated simply and quickly.

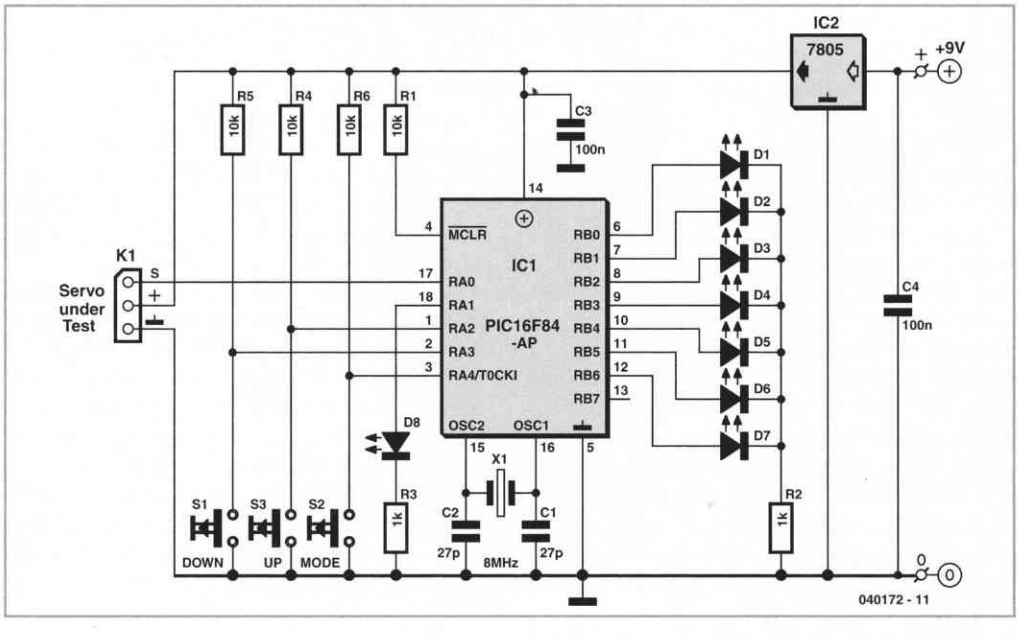

Secondly the device has the ability to switch to an 'exercise' mode. Selecting this mode cycles the servo between the extremes of its travel and serves as a useful quick test of normal servos to verify correct working. A further LED indicates selection of this mode.
Finally the device uses very few components and is extremely cheap to build since the PIC processor carries out all of the timing functions.

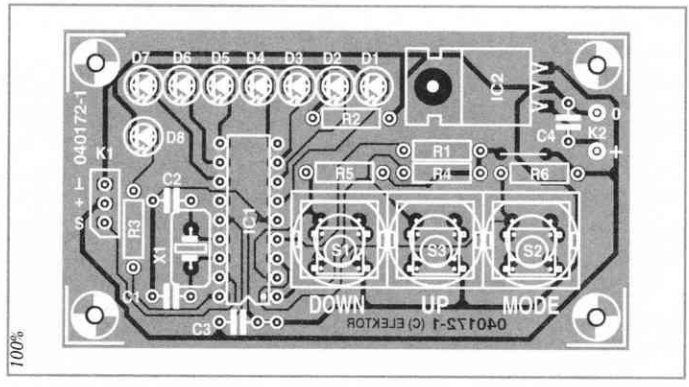

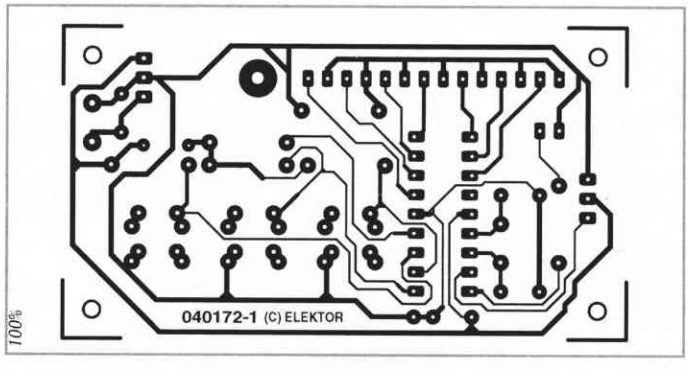

The circuitry is a pretty straightforward implementation of the good old PIC 16F84 processor with eight LEDs D1-D8 and three switches S1, S2, S3 connected. The software generates a servo output signal every 20 ms then scans the switches for a button press. Depending on the button pressed the output pulse length will be adjusted accordingly.
When first switched on the circuit will output a servo pulse of 1.5 ms duration and the middle LED of the array will be lit. Pressing the 'up' or 'down' buttons will increase or decrease the pulse width by 0.166 ms and the LED display will move as appropriate to show the pulsewidth selected.

COMPONENTS LIST

Resistors (1/4W 10%)
R1, R4, R5, R6 = 10 kΩ
R2, R3 = 1 kΩ

Capacitors (5mm lead pitch)
C1, C2 = 27 pF
C3, C4 = 100 nF

Semiconductors
D1-D3, D5-D7 = LED, 3mm, high efficiency, green
D4, D8 = LED, 3mm, high efficiency, yellow
IC1 = PIC16F84(A), programmed, order code 040172-41
IC2 = LM2940 (or 5V 1A low drop equivalent)

Miscellaneous
X1 = 8MHz quartz crystal, 32pF parallel load capacitance, HC49 case or lowprofile type
K1 = 3 way SIL pinheader
S1, S2, S3 = pushbutton, 1 make contact
Case: Hammond 1591ATBU
IC socket 18p
Mains adaptor DC socket
PCB, order code 040172-1

At any time the 'mode' button may be pressed which causes the device to switch to/from the 'exercise' mode. A servo connected to the output will cycle repeatedly from end to end of its travel — a useful indication of whether the servo is operational or not.

An Elektor-style PCB was designed for the project and the artwork is shown here. Only one wire is required on the board. The author's own prototype incorporated two of these boards in a single enclosure so that two

servos on a model can be tested at once. The board shown in the photograph is a prototype differing from the final version in minor detail.

The source code was written using Proton PIC Basic+ which then compiles into assembler and object code. For those with a PIC programmer, all project software including the hex and source code files is available as a free download, file ref. 040172-11.zip, from the Elektor website. The PIC is also available ready programmed under number 040172-41.

Several options are available for powering the circuit. A 9-V PP3 (6F22) battery may look okay at first blush but then it will be exhausted quickly even with small servos. A mains adaptor ('battery eliminator') is possible, but precludes field use. Undoubtedly the most elegant approach, then, is the use of a case with a battery compartment for penlight (AA size) batteries, and then use four alkaline cells or five NiMH rechargeables to obtain a raw supply voltage of 6 V. This will necessitate the use of a low-drop regulator for IC2, like the 4805 or the LM2940 you find suggested here because it will not drain an almost flat battery due to its own current. An on/off switch is also recommended. The standby current consumption of the circuit amounts to about 5 mA.
Finally, PIC burners among you using the hex file should set the config bits as follows: HS (10) (since xtal > 4 MHz); WDTE disable (0); PWRTE enable (0). The other config bits are for code protection and their use is at your discretion.

(040172-1)

Download
The project software can be downloaded free from *www.elektor.com*, file # 040172-11.

Kit
As a special service to our readers active in RC modelling, the project is also offered as a kit of parts including all parts, PCB, programmed microcontroller and ABS case. The order code is 040172-71.

101 Smooth Flasher

HOBBY AND MODELLING

Burkhard Kainka

Ordinary LED flashers turn the LED on and off abruptly, which can get a little irritating after a while. The circuit shown here is more gentle on the eyes: the light intensity changes very slowly and sinusoidally, helping to generate a relaxed mood.

The circuit shows a phase-shift oscillator with an adjustable current source at its output. The circuit is capable of driving two LEDs in series without affecting the current.

The frequency is set by three RC networks, each of which consists of a 100 μF capacitor and a 22 kΩ resistor.

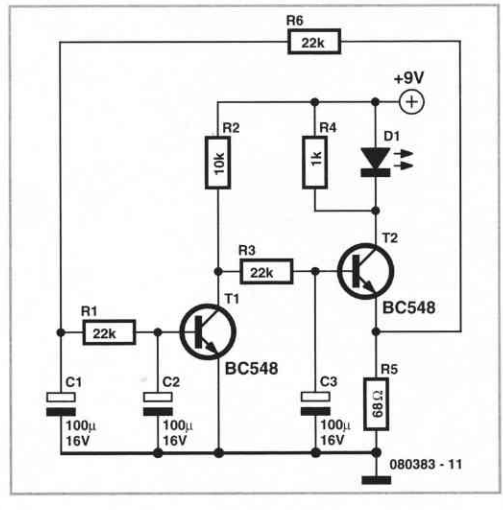

Operation is largely independent of supply voltage, and the average LED current is set at about 10 mA. The circuit adjusts the voltage across the emitter resistor so that it matches the base voltage of the first transistor (around 0.6 V). The phase shifting network gives rise to the oscillation around this average value. In the prototype of this circuit we used an ultra-bright red LED.

(080383-I)

102 Hard-Wired Code Lock

HOME AND GARDEN

Heino Peters

Installations with restricted access are often protected using an access code. If you don't have particularly demanding requirements regarding modifying the code, you can manage quite nicely with a static design with the access code fixed in the hardware.

The access code can be set by inserting wire links in the IC socket shown at the left in the schematic diagram. The code '0280' is shown configured in the drawing. The user enters the code with S1–S10. The most important components in this circuit are the four NAND gates (4011 CMOS IC) and the counter with ten decoded outputs (4017 CMOS IC).

R1–R4 hold the four pushbutton inputs at ground level if no button is pressed. No measures need be taken to debounce the switch signals, since the circuit simply ignores repeated button presses. In the quiescent state, a '1' is applied to the reset input (pin 15) of IC2, which causes output Q0 (pin 3) of IC2 to be the only output with a '1' level. All other

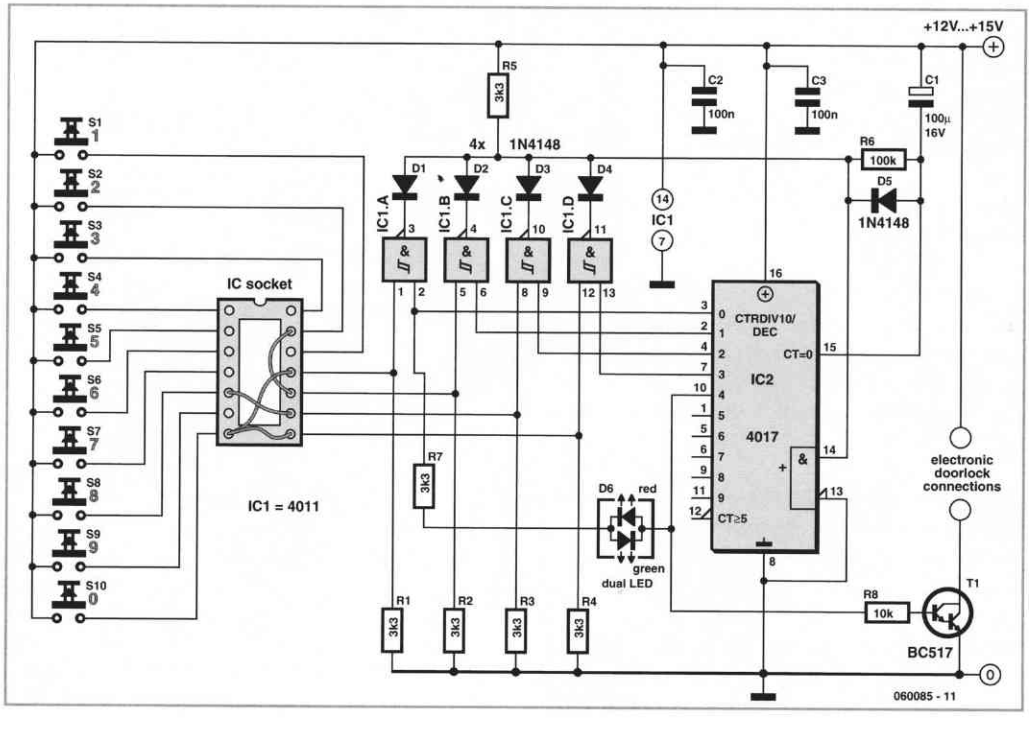

counter outputs are at the '0' level. Dual LED D6 will be on and red to indicate that a code can be entered. If the button for the first digit of the preset code is now pressed (in this case the '0' button), the output of IC1a will go to '0' and the reset input of IC2 will also go to '0' via D1 and D5. When the button is released, a rising edge appears at the clock input of IC2, which causes the counter to be incremented by 1. Thanks to R6 and C1, the reset input of IC2 remains low for around 10 seconds. Output Q1 (pin 2) of the counter is now '1' as a result of the clock pulse, and IC1b is waiting for the second button ('2') to be pressed. If that doesn't happen within 10 seconds, C1 discharges via R5 and R6 to a level that causes IC2 to be reset. Dual LED will again become red, and the user must start entering the code again. However, if the buttons for the each of the remaining digits of the code are pressed correctly within 10 seconds, the Q4 output (pin 10) will ultimately go to '1' and the dual LED will change to green. After 10 seconds, C1 will again be discharged and the dual LED will change back to red. The Q4 output can be used to switch something, such an electronic door latch.

If you want to change the code, you only have to change the configuration of the wire jumpers in the IC socket.

The combination of diodes D1–D4 and R5 acts as an AND gate. If the output of one of the four NAND gates in IC1 is '0' (which is always the case if a correct button is pressed), a '0' is applied to the clock input of IC2 as long as the button is held pressed. If you find a delay of 10 seconds too long, you can reduce the value of R6 or C1. The time is approximately equal to the product of R6 and C1 (R6 × C1).

(060085-1)

103 Discrete PWM Generator

TEST AND MEASUREMENT

Alexander Wiedekind-Klein

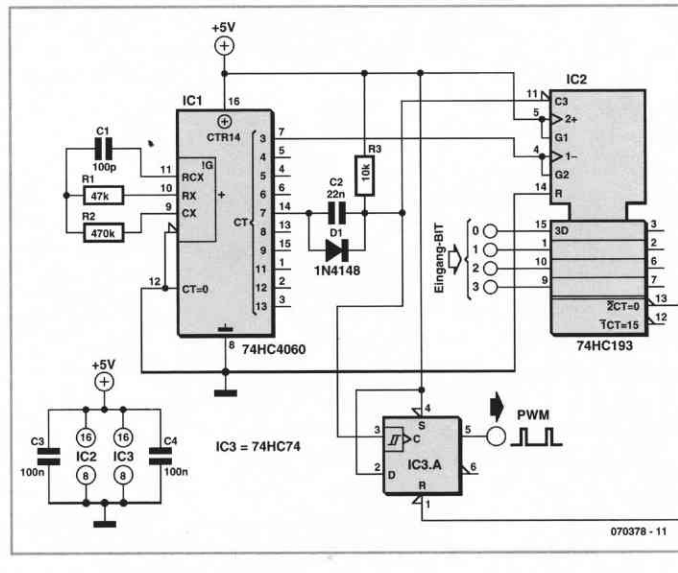

PWM waveforms are commonly used to control the speed of DC motors. The mark/space ratio of the digital waveform can be defined either by using an adjustable analogue voltage level (in the case of a NE555 based PWM generator) or digitally using binary values.

Digitally derived PWM waveforms are most often produced by the timer/counter modules in microcontrollers but if you do not want to include a microcontroller in your circuit it's also quite simple to generate the signals using discrete logic components.

An extension of the circuit shown can produce two PWM waveforms from an 8-bit digital input word. Each signal has 15 values. The

8-bit word can be produced for example from an expansion board fitted in a PC or from an 8-bit port of a processor which does not have built-in PWM capability or from a laptop's printer port.
The mark/space ratio is only programmable up to 15/16 rather than 16/16; a binary input of 0000 produces a continuous low on both outputs turning both motors off. Similar circuits often employ a dedicated 'enable' input to turn the motors off but it is not necessary in this design.

The diagram shows the circuitry required to produce just one waveform. For the full two channel circuit it is necessary to use an additional 74HC193. The clock signal produced by the HCF4060 generator can be used to drive both channels and the free flip flop in the 74HC74 package can be used for the second channel (the corresponding pin numbers are shown in brackets).
Altogether the entire two channel circuit can be built using just four ICs.

(070378-I)

104 Stepper Motor Controller

HOBBY AND MODELLING

Gert Baars

Stepper motors are available in several versions and sizes with a variety of operating voltages. The advantage of this general-purpose controller is that is can be used with a wide range of operating voltages, from approximately 5 V to 18 V. It can drive the motor with a peak voltage equal to half the supply voltage, so it can easily handle stepper motors designed for voltages between 2.5 V and 9 V. The circuit can also supply motor currents up to 3.5 A, which means it can be used to drive relatively large motors. The circuit is also short-circuit proof and has built-in overtemperature protection.
Two signals are required for driving a stepper motor. In logical terms, they constitute a Grey code, which means they are two square-wave signals with the same frequency but a constant phase difference of 90 degrees. IC1 generates a square-wave signal with a frequency that can be set using potentiometer P1. This frequency determines the rpm of the motor.
The Grey code is generated by a decimal counter in the form of a 4017. Outputs Q0–Q9 of the counter go high in succession in response to the rising edges of the clock signal. The Grey code can be generated from the outputs by using two OR gates, which are formed here using two diodes and a resistor for each gate, to produce the I and Q signals. Here 'I' stands for 'in-phase' and 'Q' for 'quadrature', which means it has a 90-degree phase offset from the I signal. It is common practice to drive the windings of a stepper motor using a pair of push-pull circuits for each winding, which is called an 'H bridge'. That makes it possible to reverse the direction of the current through each winding, which is necessary for proper operation of a bipolar motor (one whose windings do not have centre taps). Of course, it can also be used to properly drive a unipolar motor (with centre-tapped windings).
Instead of using a push-pull circuit of this sort, here we decided to use audio amplifier ICs (type TDA2030), even though that may sound a bit strange. In functional terms, the TDA2030 is actually a sort of power opamp. It has a difference amplifier at the input and a push-pull driver stage at the output. IC3, IC4 and IC5 are all of this type (which is economically priced). Here IC3 and IC4 are wired as comparators. Their non-inverting inputs are driven by the previously mentioned I and Q signals, with the inverting inputs set to a potential equal to half the supply voltage. That potential is supplied by the third TDA2030. The outputs of IC3 and IC4 thus track their non-inverting inputs, and each of them drives one motor winding.

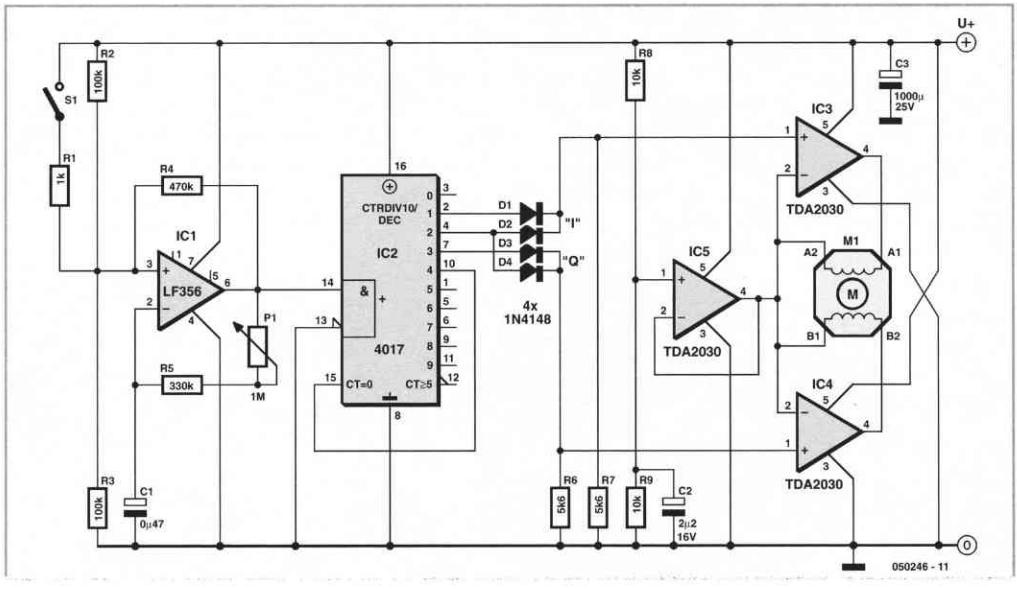

The other ends of the windings are in turn connected to half the supply voltage, provided by IC5. As one end of each winding is connected to a square-wave signal that alternates between 0 V and a potential close to the supply voltage, while the other end is at half the supply voltage, a voltage equal to half the supply voltage is always applied to each winding, but it alternates in polarity according to the states of the I and Q signals. That's exactly what we want for driving a bipolar stepper motor.

The rpm can be varied using potentiometer P1, but the actual speed is different for each type of motor because it depends on the number of steps per revolution. The motor used in the prototype advanced by approximately 9° per step, and its speed could be adjusted over a range of approximately 2 to 10 seconds per revolution. In principle, any desired speed can be obtained by adjusting the value of C1, as long as the motor can handle it. The adjustment range of P1 can be increased by reducing the value of resistor R5. The adjustment range is 1 : (1000 + R5) / R5, where R5 is given in kΩ.

If a stepper motor is switched off by removing the supply voltage from the circuit, it's possible for the motor to continue turning a certain amount due to its own inertia or the mechanical load on the motor (flywheel effect). It's also possible for the position of the motor to disagree with the states of the I and Q signals when power is first applied to the circuit. As a result, the motor can sometimes 'get confused' when starting up, with the result that it takes a step in the wrong direction before starting to move in direction defined by the drive signals.

These effects can be avoided by adding the optional switch S1 and a 1-kΩ resistor, which can then be used to start and stop the motor. When S1 is closed, the clock signal stops but IC2 retains its output levels at that moment,

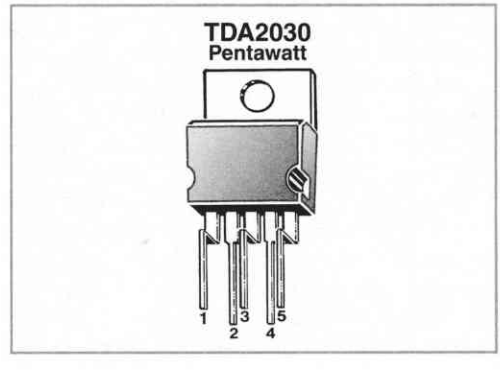

so the continuous currents through the motor windings magnetically 'lock' the rotor in position.

The TDA2030 has internal overtemperature protection, so the output current will be reduced automatically if the IC becomes too hot. For that reason, it is recommended to fit IC3, IC4 and IC5 to a heat sink (possibly a shared heat sink) when a relatively high-power motor is used. The tab of the TO220 case is electrically bonded to the negative supply voltage pin, so the ICs can be attached to a shared heat sink without using insulating washers.

(050246-1)

105 PR4401/02 off the Beaten Track

MISCELLANEOUS ELECTRONICS AND DESIGN IDEAS

Ernst Krempelsauer
& Burkhard Kainka

The well-known PR4401 and PR4402 LED drivers from PREMA have enjoyed great popularity as a result of their low cost, tiny physical size, and ready availability. The device is a switching regulator that is specifically designed for driving white LEDs from a single dry or rechargeable cell. The only external component required is a small inductor (see **Figure 1**).

For maximum output power a 10 μH inductor is needed in the case of the PR4401, and 4.7 μH in the case of the PR4402. With an input voltage of between 0.9 V and 1.5 V the PR4401 can then deliver a current of up to 23 mA into the white LED connected to its output; the PR4402 can manage currents as high as 40 mA. Other current-delivery applications besides driving LEDs are also possible, of course. For example, the LED can be replaced by a string of between one and ten NiMH cells in series plus a series diode (see **Figure 2**). The cells will then be charged at a current of up to 23 mA (PR4401) or up to 40 mA (PR4402).

The output of the switching regulator behaves as a kind of constant power source, always delivering (with the coil values suggested above) around 70 mW (PR4401) or 140 mW (PR4402) into the connected load. When charging NiMH cells the current will be at its maximum value given above when up to three cells are connected (3.6 V), and with more cells (that is, with a higher total battery

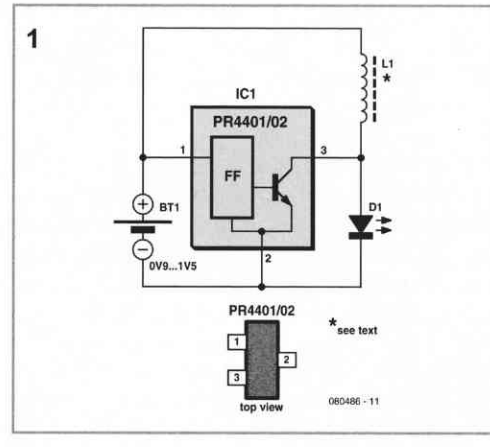

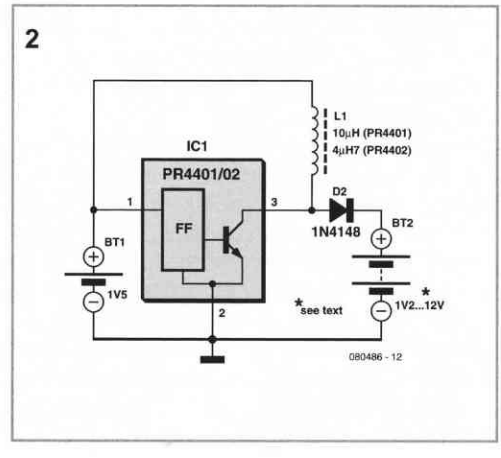

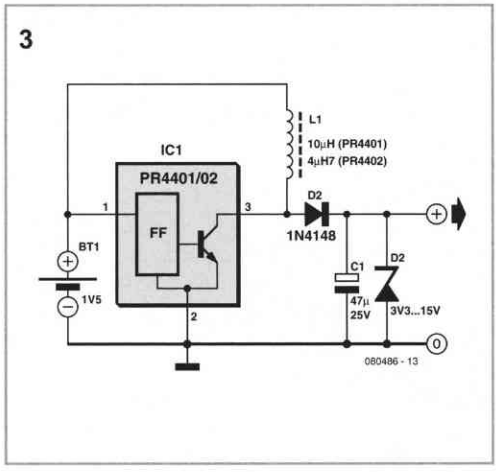

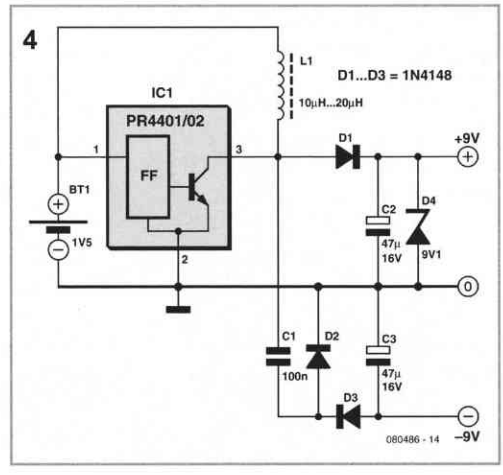

voltage) the current will fall. With ten cells (12 V) the current flow to the battery is just 6 mA (PR4401) or 12 mA (PR4402).

The ICs are less suitable for applications where the load characteristics are not constant. The lower the load, the higher the output voltage, and with an open-circuit output an internal zener diode limits the output voltage to approximately 18 V. This diode therefore effectively replaces the missing load and dissipates the power output by the regulator. If the output voltage is limited to a lower value using an external zener diode then the regulator will deliver all the output power not taken by the load into the diode. The upshot of all this is that the lower the load, the poorer the efficiency of the circuit.

Applications of this attractive device as a voltage source are also worth a quick look. For example, you might be looking for an application for the printed circuit board, with PR4401 IC and coil ready fitted, that came free with the September 2007 issue of *Elektor*.

Figure 3 shows the circuit of a simple voltage regulator using a PR4401 or PR4402. The zener diode voltage is chosen according to the wanted output voltage, between 3 V and 15 V. These voltages can be generated from a single NiMH or alkaline cell (1.2 V or 1.5 V), which, for example, allows you to replace the expensive 12 V batteries found in some instruments and in remote controls for garage door openers. The maximum output current from the voltage regulator can be calculated as follows:

$$I_{max} = \frac{P_{max}}{U_Z}$$

P_{max} is 70 mW (PR4401) or 140 mW (PR4402) and U_Z is the zener voltage, which is equal to the output voltage. The circuit is most efficient when the output current is near to Imax. If necessary, I_{max} can be reduced by using a higher-valued inductor to match it better to the required output load. To a reasonable approximation, doubling the inductance will halve the maximum output current.

We can also use a LED driver to generate a symmetrical supply from a single NiMH or alkaline cell. **Figure 4** shows a practical example generating +9 V and –9 V. Because of the additional diode in the negative arm of the circuit, the negative output is about 0.7 V lower in magnitude than the positive. In our prototype, where we used a 15 μH inductor and a 1.5 V cell voltage, we obtained the measured output voltages of +9 V and –8.3 V (with no load), and +8.6 V and –7.9 V (with a 2.2 kΩ load, simulating the 4 mA current draw of a typical opamp circuit).

The current drawn from the 1.5 V cell was 50 mA in the no-load case and 80 mA in the 2.2 kΩ load case.

(080486-I)

106 Gentle Breeze

Rainer Reusch

Where there is heat, let us bring cooling: a fan will do the job, but unfortunately fans are usually noisy. In many cases there is no need for the fan to run continuously at full speed, and so it makes sense to control the fan speed in response to the temperature of the heatsink or device being cooled, switching the fan off entirely if it should fall to room temperature.

The circuit shown here does this and even offers a little more. The low-cost KTY81-110 is used as the temperature sensor, in a negative-feedback arrangement with an operational amplifier.

The temperature-dependent voltage at the non-inverting input to opamp IC1.A leads to a voltage variation at the output (pin 1) from 4 V at 30 °C to 4.72 V at 60 °C. The second stage (IC1.D) converts this relatively small swing and inconvenient voltage offset into the range 8 V to 12 V suitable for the fan. The third operational amplifier works as a comparator. At room temperature its output sits at nearly 12 V and pulls the output of the second stage with it, switching transistor T1 off.

If the temperature exceeds 35 °C the comparator switches; diode D1 blocks and the control circuit can operate as normal. The hysteresis of the comparator has been set so that the comparator state will only change again, turning off the fan, if the temperature falls below 30 °C. Capacitor C3 ensures that the fan is run at full voltage for about 0.7 seconds immediately after switch-on, so that the motor will start reliably.

The fourth opamp in the LM324, IC1.C, is used to create an over-temperature warning

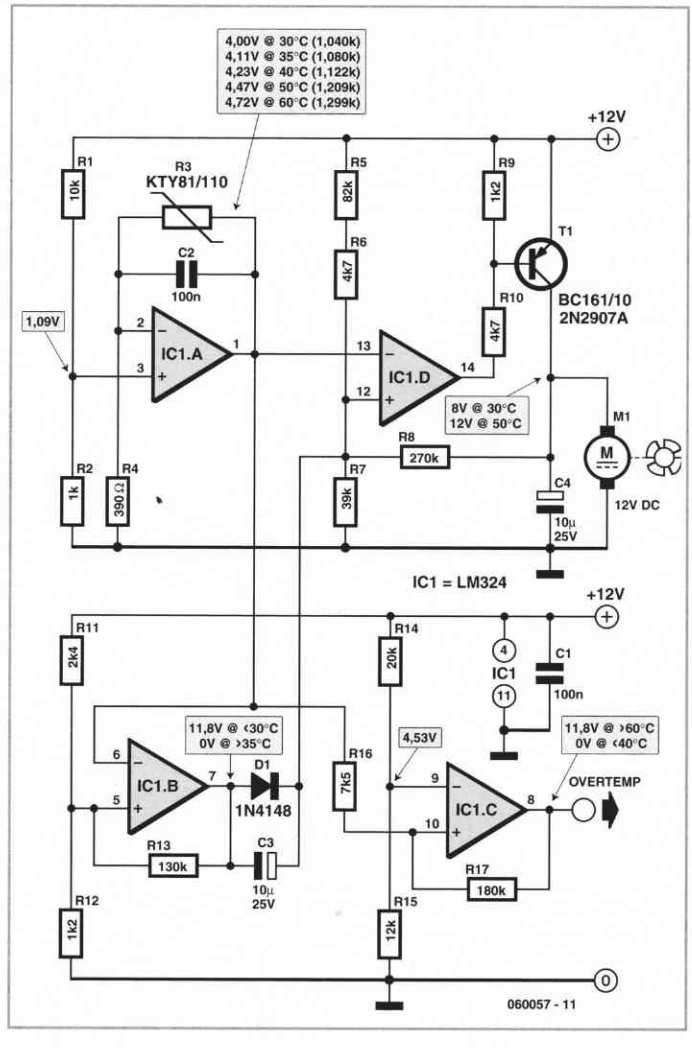

indicator. This is necessary in case the fan, even running at full speed, is not able to provide enough cooling, or, because of a fault, cannot reach full speed. This opamp is also configured as a comparator. If the sensor temperature reaches a value of 60 °C, the comparator output goes high (to nearly 12 V). The output will only go low again (nearly 0 V) if the temperature falls below 40 °C. An LED (with series current-limiting resistor) can be connected to its output (pin 8); alternatively a transistor could be used to drive a relay.

The circuit is sufficiently accurate without adjustments, but metal-film resistors with a tolerance of 1 % should be used. Some of the values used are from the E24 series.

The supply voltage is used as a reference throughout, and so should be well regulated: a 7812 voltage regulator is adequate.

(060057-1)

107 Mini High-voltage Generator

POWER SUPPLIES, BATTERIES AND CHARGERS

B. Broussas

Here's a project that could be useful this summer on the beach, to stop anyone touching your things left on your beach towel while you've gone swimming; you might equally well use it at the office or workshop when you go back to work.

In a very small space, and powered by simple primary cells or rechargeable batteries, the proposed circuit generates a low-energy, high voltage of the order of around 200 to 400 V, harmless to humans, of course, but still able to give a quite nasty 'poke' to anyone who touches it.

Quite apart from this practical aspect, this project will also prove instructional for younger hobbyists, enabling them to discover a circuit that all the 'oldies' who've worked in radio, and having enjoyed valve technology in particular, are bound to be familiar with.

As the circuit diagram shows, the project is extremely simple, as it contains only a single active element, and then it's only a fairly ordinary transistor. As shown here, it operates as a low-frequency oscillator, making it possible

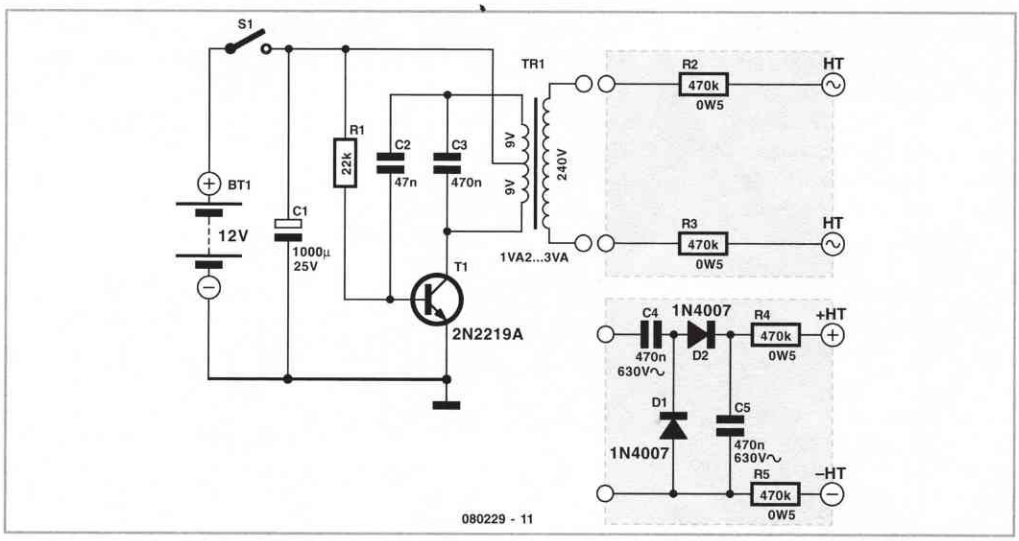

to convert the battery's DC voltage into an AC voltage that can be stepped up via the transformer. Using a centre-tapped transformer as here makes it possible to build a 'Hartley' oscillator around transistor T1, which as we have indicated above was used a great deal in radio in that distant era when valves reigned supreme and these was no sign of silicon taking over and turning most electronics into 'solid state'. The 'Hartley' is one of a number of L-C oscillator designs that made it to eternal fame and was named after its invertor, Ralph V.L Hartley (1888-1970).

For such an oscillator to work and produce a proper sinewave output, the position of the intermediate tap on the winding used had to be carefully chosen to ensure the proper step-down (voltage reduction) ratio. Here the step-down is obtained inductively.
Here, optimum inductive tapping is not possible since we are using a standard, off-the-shelf transformer. However we're in luck – as its position in the centre of the winding creates too much feedback, it ensures that the oscillator will always start reliably. However, the excess feedback means that it doesn't generate sinewaves; indeed, far from it. But that's not important for this sort of application, and the transformer copes very well with it.

The output voltage may be used directly, via the two current-limiting resistors R2 an R3, which must not under any circumstances be omitted or modified, as they are what make the circuit safe. You will then get around 200 V peak-to-peak, which is already quite unpleasant to touch. But you can also use a voltage doubler, shown at the bottom right of the figure, which will then produce around 300 V, even more unpleasant to touch. Here too of course, the resistors, now know as R4 and R5, must always be present.

The circuit only consumes around a few tens of mA, regardless of whether it is 'warding off' someone or not! If you have to use it for long periods, we would however recommend powering it from AAA size NiMH batteries in groups of ten in a suitable holder, in order not to ruin you buying dry batteries.

Warning! If you build the version without the voltage doubler and measure the output voltage with your multimeter, you'll see a lower value than stated. This is due to the fact that the waveform is a long way from being a sinewave, and multimeters have trouble interpreting its RMS (root-meansquare) value.
However, if you have access to an oscilloscope capable of handling a few hundred volts on its input, you'll be able to see the true values as stated. If you're still not convinced, all you need do is touch the output terminals...

To use this project to protect the handle of your beach bag or your attaché case, for example, all you need do is fix to this two small metallic areas, quite close together, each connected to one output terminal of the circuit. Arrange them in such a way that unwanted hands are bound to touch both of them together; the result is guaranteed! Just take care to avoid getting caught in your own trap when you take your bag to turn the circuit off!

(080229-I)

108 Fuse Saver

POWER SUPPLIES, BATTERIES AND CHARGERS

David Clark

This circuit will be particularly useful to those hobbyists who use a 'breadboard' to try out ideas and who also use a simple 'home-made' DC power supply consisting of a transformer, rectifier, smoothing capacitor and protective fuse, that is, one without overcurrent protec-

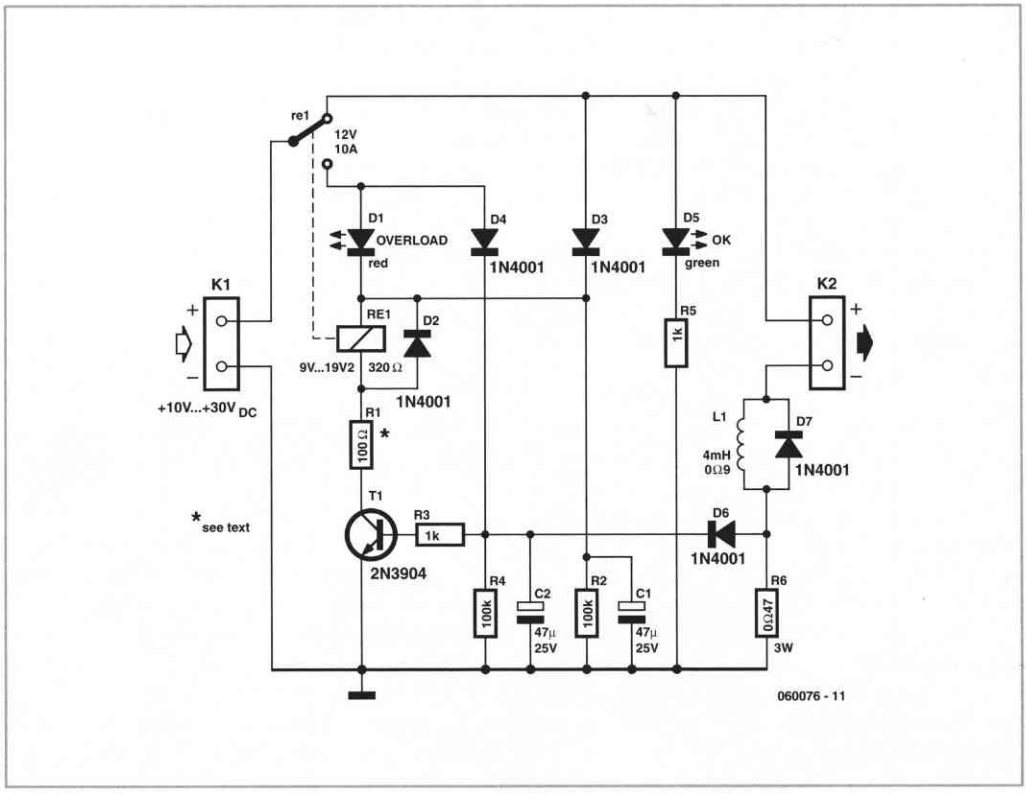

tion! In this circuit, the detecting element is resistor R6. Under normal conditions, its voltage drop is not high enough to switch on transistor T1. The value of R6 can be altered to give a different cut-off current, as determined by Ohm's Law, if required. When a short circuit occurs in the load, the voltage rises rapidly and T1 starts to conduct. This draws in the relay, switching its contacts, which cuts off power to the external circuit, and instead powers the relay coil directly, latching it in this second state. The circuit remains in this state until the primary power supply is switched off.

Capacitors C1 and C2 hold enough charge (via D3, D4 and D6, which prevent the charge from being lost to the rest of the circuit, whichever state it is in) to keep T1 switched on and power the relay while it switches over, and R2 and R4 provide slow discharge paths. LEDs D1 (red) and D5 (green) indicate what state the circuit is in.

Inductor L1 slows the inrush of current when the circuit is switched on, which would otherwise cut off the circuit immediately. D2 and D7 provide the usual back-emf protection across the coils.

In use, the input of the circuit is connected to the main transformer-rectifier-capacitor-fuse power supply via K1, and the output is connected to the (experimental) load via K2. Note that the input voltage must be a floating supply if V_{out-} is grounded via the load, as V_{in-} and V_{out-} must not be connected together.

Some consideration needs to be given to a number of components.

First, the choice of relay Re1. For the prototype, this was obtained from Maplin, part number YX97F. This is has a coil resistance of 320 Ω, which with R1 forms the collector load for T1. Its allowed pull-in voltage range is nominally 9 V to 19 V, which limits the input

power supply voltage to between around 10 V to 30 V (DC only). R1 could be replaced by a wire link for operation at input voltages below 10 V, or increased in value, as determined by either the application of Ohm's Law once more or trial and error, for an input voltage above 30 V.

Coil L1 was obtained from Farnell, part number 581-240. Finally, the protective fuse for the input power supply should be a 'slow-blow' type; 'fast' fuses will rupture before the relay has time to switch. Also note that this device is meant to save fuses, not replace them.

A mains transformer must always be fused if it is not designed to run safely, i.e., without presenting a fire hazard, even if its output has a continuous short-circuit fault.

(060076-1)

109 Deluxe '123' Game

HOBBY AND MODELLING

Stefan Hoffmann

The rules of the '123' Game are described in the '123 Game – all MCU-free' article (see page 66). Naturally, a more luxurious version can be built with a microcontroller. Here you don't have to manipulate a probe tip to play the game, and the playing field is formed by LEDs instead of mini-sockets. A microcontroller drives the LED array, and three input buttons take over the role of the probe tip. In contrast to the simple version, the built-in 'intelligence' of the microcontroller also allows two humans to play against each other.

A 'welcome screen' with various LED patterns is displayed after the circuit is switched on. A bicolour LED then cycles through all three colours (red, green and orange) while waiting for the player to select a game mode:

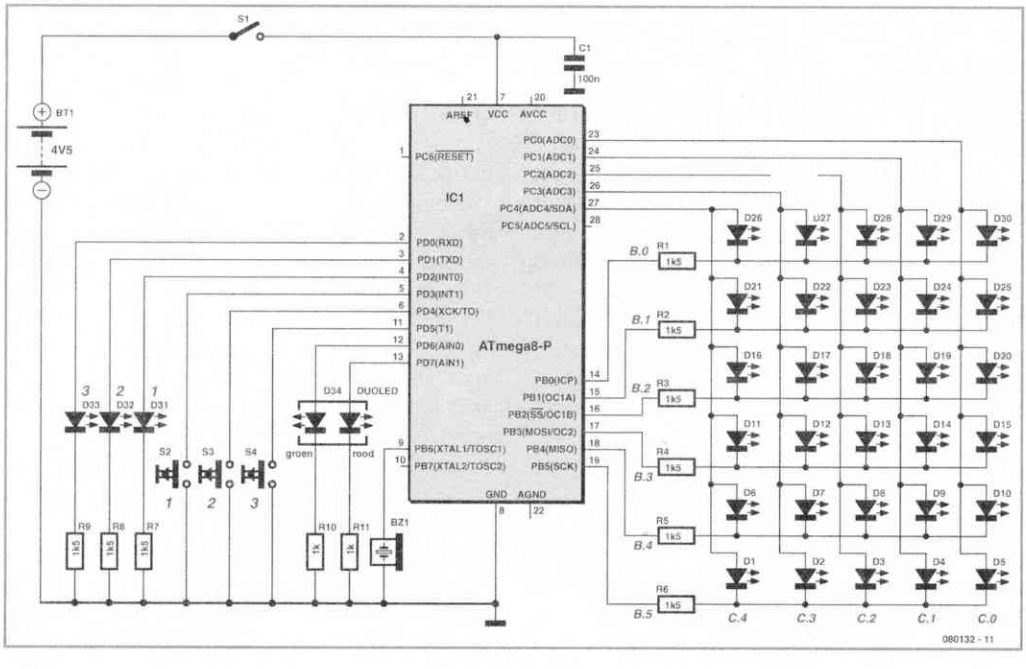

- Button 1: Human vs. MCU; human starts;
- Button 2: MCU vs. human; MCU starts;
- Button 3: Human vs. human.

The course of play is essentially the same as before. The human player and the computer take turns moving by one, two or three steps. When it's the human's turn to move, he or she presses a button for the desired number of steps ('1', '2' or '3'). The selection steps is confirmed by the '123' LEDs and then performed on the playing field LEDs. The bicolour LED is green when it's the human's turn and red when it's the computer's turn. Purely for effect, the computer does not move right away, but instead 'ponders' a while before moving, and the moves are made slowly, step by step, instead of all at once.
The number of steps the computer wants to move is also shown by the '123' LEDs. The move is then performed on the playing field LEDs. If the human player tries to move past the goal, this is corrected automatically. In the human vs. human mode, the bicolour LED turns orange to indicate that it's the opponent's turn.

The winner is determined by the microcontroller. If the human player wins, the bicolour LED blinks green, and if the computer wins it blinks red. If the opponent wins, the LED blinks orange/red. A beeper gives extra lustre to the 'victory ceremony'. It gives a low beep if the human loses and celebrates a human victory with two high beeps.

The software for the ATmega8 was generated using BASCOM, and it can be compiled with the demo version. The BASCOM source code and a hex file can be downloaded from the www.elektor.com – the archive file number is 080132-11.zip. A preprogrammed microcontroller is also available (order no. 080132-41).

(080132-1)

110 89LPC9xx USB Programming

MICROCONTROLLERS

Back in November 2003 you could already read about a small development system for the (then) new series of controllers from the 8051-compatible 89LPC9xx-family.
A nice feature of the current 89LPC9xx-series is that these chips can remain in the circuit while (re-)programming. All that's required for this programming is an RS232 port. But because many modern computers do not have an RS232 connection any more, we propose here a USB version. For this we use a well-known USB/RS232-converter chip, the FT232R.
The 89LPC9xx series can be placed in programming mode in two different ways: by transmitting a 'break' over the serial port or by providing three defined reset pulses immediately after power-on. We use the latter method, because this is a hardware solution. This is because the 'break' has to be sensed by software. In plain language: this method only works with a well-behaved program. And this is obviously not always the case in a development environment!
When you also look at the schematic from 2003, you will see that very little has changed. Really the only difference is that the RS232 interface chip has been replaced with the FT232R. As you will know, the USB-interface is terribly slow when the handshake lines such as DTR and RTS are used. Fortunately that is not the case here, since DTR and RTS are used just once at the beginning and end of the programming cycle. The actual programming is done by transmitting commands and data across the serial port.

A few remarks

To be able to program you will have to change a jumper each time. On the one hand

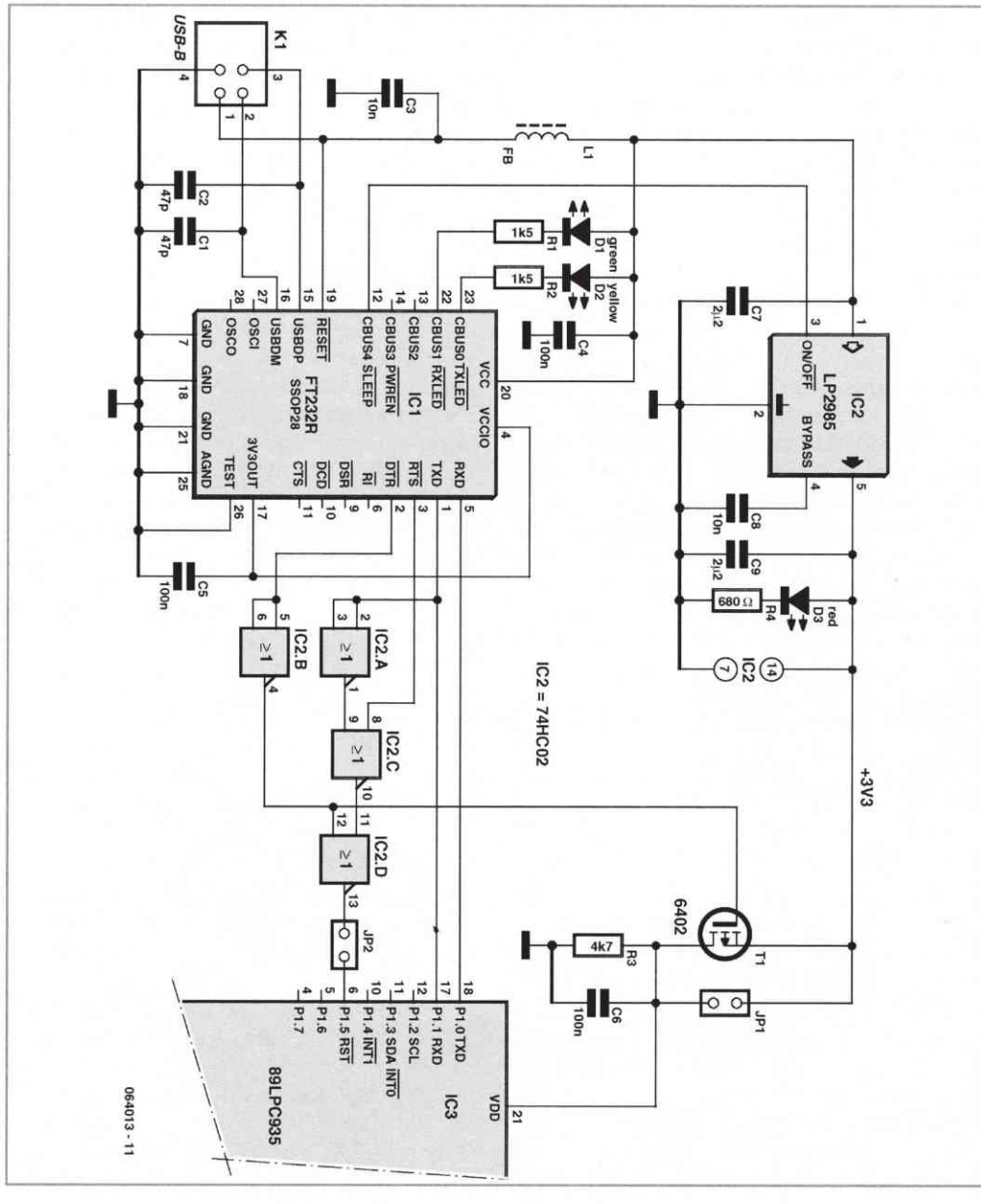

this is a little tedious, but on the other hand it gives a little bit of security. During software development a double pole change-over switch does wonders! Note that the processor is placed in programming mode by three reset pulses after power-on. If the power supply voltage does not drop sufficiently beforehand (<2.7 V), then the processor will not be placed in power-up mode by the brownout circuit and therefore cannot be placed in programming mode either.

That is why a resistor of 4k7 has been added to drop the power supply voltage faster and lower. Check the inputs in your application. If these are powered from another voltage then the processor will be powered from its inputs

via the protection diodes and programming will not work then!
It is possible (but not necessary) to power the circuit through a low-drop regulator from the USB-connection.

You can also omit L1, but it is better to put a few turns of wire through a ferrite bead.
The pin numbering shown is for the SSOP-28 package.

(064013-1)

111 TV Muter

AUDIO, VIDEO AND PHOTOGRAPHY

Michael Hölzl

Many households are still graced by tubetype television sets. If you want to connect one of these large tellies to your stereo system to improve the sound quality, this is usually not a problem because there are plenty of SCART to Cinch adapters available in accessory shops.
However, with some sets your pleasure is spoiled by the fact that the audio outputs of the SCART connector are not muted during channel switching. This can sometimes lead to nasty signal spikes, which can cause the loudspeakers of your stereo system to emit irritating popping and cracking noises. In such cases it is a good idea to fit your system with a mute circuit.

Fortunately, the right time to activate the mute circuit is defined by the fact that the happy zapper presses buttons on the remote

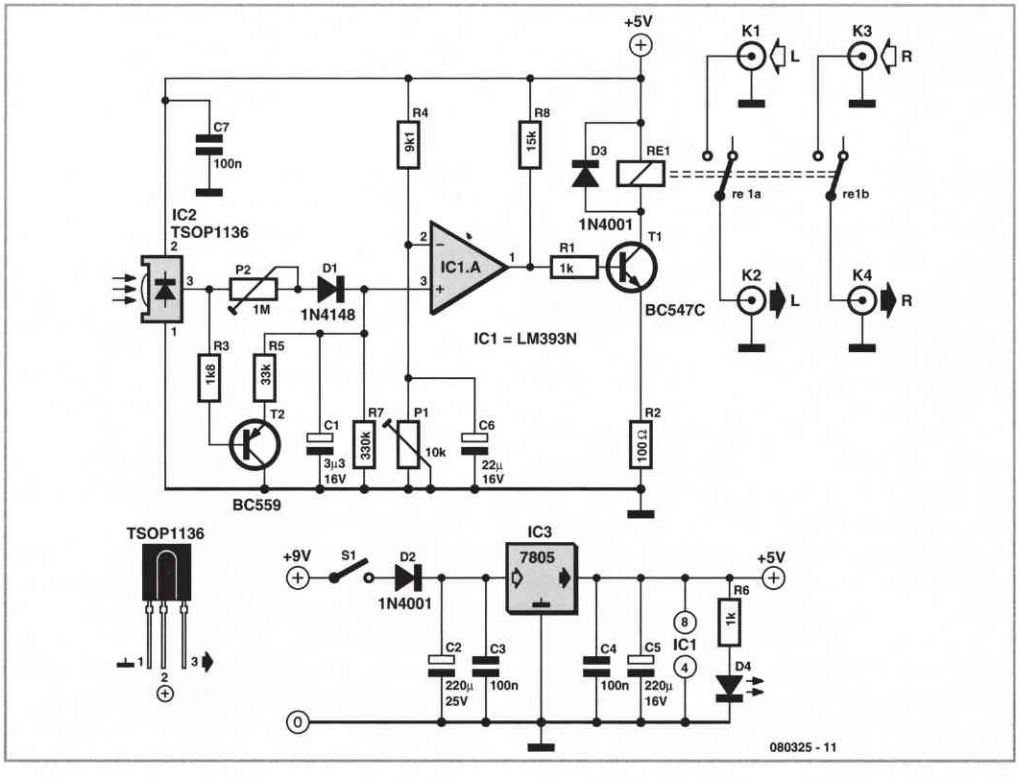

control to switch channels, and the remote control emits IR signals. There are even inexpensive ready-made IR receiver modules available, such as the TSOP1136 used here, which produce trains of active-low pulses in response to such signals.
About the circuit: when no IR signal is present, a capacitor is charged via P2 and a diode. IC1 is a comparator that compares this IR voltage (applied to its non-inverting input on pin 3) to a voltage applied to its other input on pin 2. This reference voltage, which can be adjusted with P1, determines the switching threshold of the comparator. If IC2 receives an IR signal, T2 conducts, and as a result the voltage on C1 drops rapidly below the threshold level set by P1. This causes T1 to change from its previous 'on' state to the 'off' state. As a result, the relay drops out and the audio link to the stereo system is interrupted for the duration of the noise interval. It's all quite simple, as you can see.

If you do not have a stabilised 5-V supply voltage available, you can use the circuit at the bottom of the schematic diagram (with a 5-V voltage regulator) together with a simple (unstabilised) AC mains adapter that supplies a voltage in the range of 9 V to 12 V to the 7805 (IC3).
You can also use a relay with normally-closed contacts instead of normally-open contacts. In this case, simply swap the signals on pins 2 and 3 of IC1 so the relay pulls in when an IR signal is received instead of dropping out. This saves a bit of power because the relay is only energised during zapping. If you can't find any worthwhile use for the second comparator of IC1, it's a good idea to connect pin 6 to +5 V and pin 5 to ground.

To improve noise immunity, you should shield the IR sensor so it is not exposed directly to light from a fluorescent fixture.

(080325-1)

112 Remote Control Mains Switch

HOME AND GARDEN

Jaap van der Graaff

As the only electronics engineer in my family and circle of friends, it is sometimes not possible to evade an appeal for help. This time the request came from a friendly elderly lady in a retirement home. In her room the light switch by the door and the pull cord above the bed operate the light fitting on the ceiling in the middle of the room. However, she would prefer that her standing lamp was operated by these switches instead, since she does not actually have a light fitting mounted on the ceiling. This standing lamp has an on/off switch in the power cord and is plugged into a power point. However, it stands rather far from the bed so that she always has to find her way in the dark. A wireless operated power point is not really a consideration, because it is just a matter of time before the remote is lost. Or maybe not?

Behold a feasible circuit. Buy a wireless power point and an enclosure that is big enough for the remote control and a small piece of prototyping board.

On the prototyping board build the circuit according to the accompanying schematic and (carefully) open the remote control and solder wires to the push buttons for 'on' and 'off'. Measure if these are polarised and if that is the case connect them to the 4N25 optocouplers as shown in the schematic, where pin 5 has a higher voltage than pin 4.

The operation is as follows. The lady operates the pull cord or light switch to turn the light on. This causes the mains voltage to be applied to the transformer. The relay is activated which charges C1. While C1 charges, a small current flows through optocoupler 1. The result is that the 'on' button on the remo-

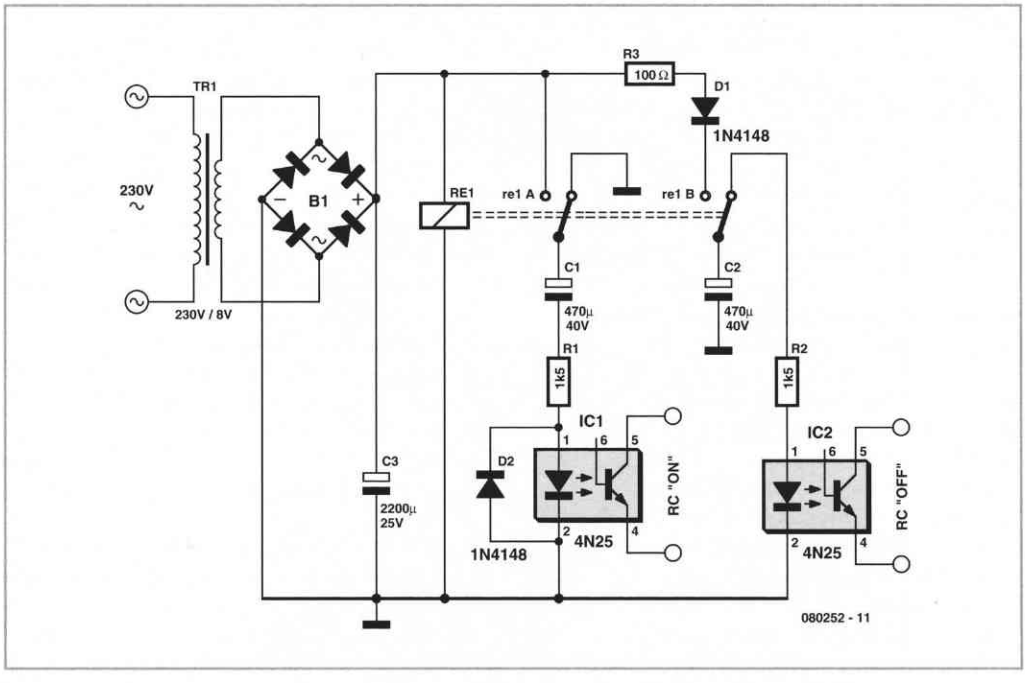

te control is pressed. The remote control switches the corresponding power point on and to which the standing lamp is connected. The standing lamp will therefore now turn on. Capacitor C2 is charged at the same time. If the lady pulls the cord again, or if she operates the switch near the door, the relay will de-energise and C2 discharges across optocoupler #2. This operates the 'off' contact of the remote control and the light goes out.

The remote control continuous to operate from its normal battery and the white enclosure is attached to the ceiling in place of the light fitting.

Diode D1 ensures that C1 is discharged when the relay de-energises.
D2 ensures that C2 cannot discharge across the relay, but only across optocoupler 2.

(080252-I)

Robots galore from page 340 of this book!



113 Solar Powered Uninterruptible PSU

C. Tavernier

When you want to power an electronic device from solar panels, broadly speaking there are currently two approaches. The first, very conventional method (described on page 115) consists of employing a combination of solar panels (or an array), an automatic charger, and a battery (or an array). This combination then powers the device concerned, which has its own voltage regulating circuits. The second, which we are proposing in this project, consists of building a 'solar' PSU directly. It is of course based on the same concept as the one described above, but having been designed for this purpose right from the start, the elements it composes are integrated to a higher extent, leading to improved efficiency.

Our suggested circuit is intended to power a number of current electronic devices directly, and can provide three different voltages: 3.3 V, 5 V or 12 V, depending on component selection; all at a current of 400 mA, which can even be increased to 1 A if necessary (details below).

It's primarily based around IC3, a high-performance switching regulator from Linear Technology. Depending on whether you choose an LT1300 [1] or an LT1301 [2] you will have a choice of two output voltages: 3.3 or 5 V for the former, and 5 or 12 V for the latter. For both ICs, the voltage is selected by fitting jumper S1 or not, as indicated in **Table 1**. Look carefully into the output voltages you will require and then select the appropriate ICs for the project.

When jumper S2 is fitted, the output current of these ICs is internally limited to 400 mA. It can be increased to 1 A by omitting the jumper, but we don't really recommend this as the rest of the circuit has been optimized for an output current from a few mA to 400 mA maximum.
The primary power source is the NiMH rechargeable battery pack, which in the case of the LT1300 will comprise two 1.2 V cells, or three cells in the case of the LT1301.

The solar panel should be chosen to deliver a voltage of the order of 9 V at an output cur-

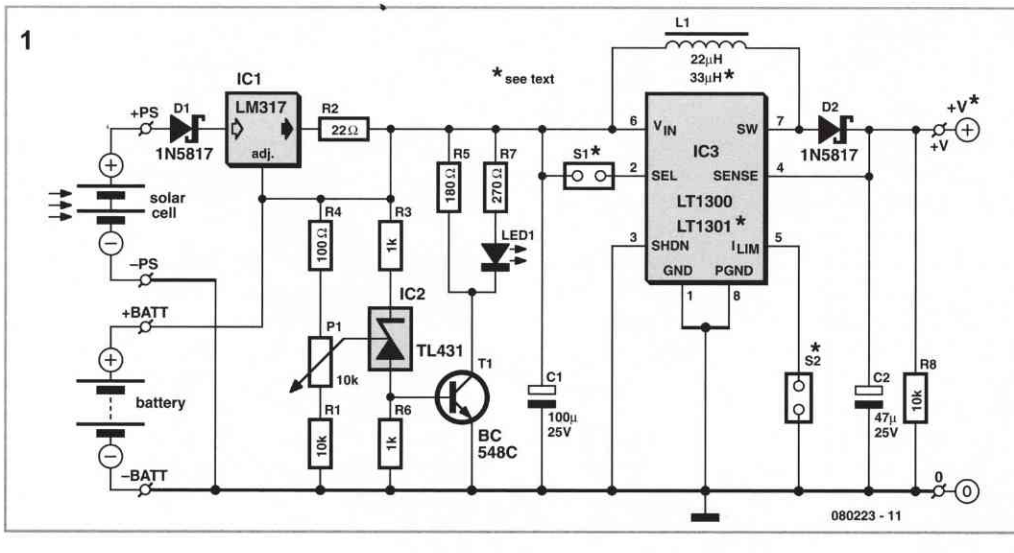

rent of around 100 mA. Such panels are available commercially.

IC1 acts as a constant current charger to limit the current to around 60 mA. To avoid overcharging the battery in the event of low current draw by the device powered on the one hand and constant sunshine on the other, the circuitry around IC2 and T1 has been added. IC2 is just a variable zener which will turn on T1 harder as the voltage at the wiper of P1 increases. In this way, when the voltage at the battery terminals rises too high, as at the end of charging, T1 will be turned on harder and harder, bypassing part or all of the charging current to ground via R5 and R7, and lighting the LED as it does so. This is simply a contemporary variation of the traditional shunt voltage regulator.

The whole of the project fits easily onto a compact printed circuit board of which the component mounting plan reproduced here. The copper track layout is a free pdf download as usual. Building up the board should not present problems as there are no oddball components to solder or mount.

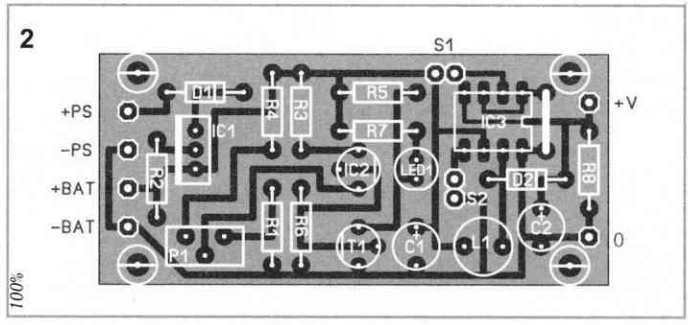

COMPONENTS LIST

Resistors
R1, R8 = 10 kΩ
R2 = 22 Ω
R3, R6 = 1 kΩ
R4 = 100 Ω
R5 = 180 Ω
R7 = 270 Ω
P1 = 10 kΩ potentiometer

Inductors
L1 = 22 μH (or 33 μH, see text)

Capacitors
C1 = 100 μF 25V
C2 = 47 μF 25V

Semiconductors
D1,D2 = 1N5817
T1 = BC548C
IC1 = LM317
IC2 = TL431
IC3 = LT1300 or LT1301 (see text)
LED1 = LED

Miscellaneous
S1,S2 = 2-way pinheader, lead pitch 2.54 mm, with jumper
6 solder pins
PCB, ref. 080223-1 from www.thepcbshop.com

Table 1		
IC3	LT1300	LT1301
L1	22 μH	33 μH
S1 fitted	+V = +5 V	+V = +12 V
S1 absent	+V = +3,3 V	+V = +5 V
S2 fitted	I_{max} = 400 mA	I_{max} = 400 mA
S2 absent	I_{max} = 1 A	I_{max} = 1 A

An 8-pin DIL socket should be soldered in the IC3 position to allow fitting of one or the other of the intended ICs. If your usual retailer doesn't have them in stock, you should be able to obtain them from mail order suppliers, for example, from Farnell. Take care choosing the choke L1 (22 μH for the LT1300 or 33 μH for the LT1301). It must be able to handle a current of 800 mA without saturating, which is far from being the case with many ordinary moulded types. Our 22 μH one comes from Radiospares (RS Components) and is an ELC08D from Panasonic.

It is vital that diodes D1 and D2 are Schottky types, to minimize forward voltage drop, and in the case of D2, to be fast enough in terms of recovery. AA or even AAA 1.2 V batteries will be suitable, given the impressive capacity of current types on the market.

The circuit should work the moment it is powered; all that remains is to adjust potentiometer P1. To do this, temporarily disconnect

the solar panel and batteries, replacing the latter with an adjustable stabilized power supply unit, across which you should also connect a voltmeter.

If you are using the LT1300 version, i.e. with two 1.2 V cells, set your PSU to 3.2 volts and then adjust P1 to obtain definite illumination of the LED. If you use the LT1301 version (and hence three 1.2 V rechargeable cells), you'll need to set your PSU to 4.8 V and again adjust P1 till the LED lights.

www.tavernier-c.com (080223-I)

Web Links
[1] LT1300
www.linear.com/pc/downloadDocument.do?navId=H0,C1,C1003,C1042,C1035,P1449,D2742
[2] LT1301
www.linear.com/pc/downloadDocument.do?navId=H0,C1,C1003,C1042,C1031,C1060,P1450,D3451

Download
The PCB design is available to download from the www.elektor.com; file # 080223-1.zip.

114 Antenna Height and Range

RF (RADIO)

Gert Baars

At frequencies below 30 MHz or so, radio transmitters can normally be received over great distances because ceratin layers of the ionosphere reflect radio signals with a certain frequency. These reflections normally do not take place at higher frequencies, so the maximum distance that can be covered is, in principle, limited to the visible horizon. How this theoretical distance can be calculated is explained here.

The accompanying figure indicates the various distances required. M is the centre point of the Earth, r is the radius, H is the height at which the antenna is placed, s is the length of the signal path between antenna and horizon and D is the distance across the Earth's curved surface.
Because in practice H will be much smaller than r, s will be approximately equal to D. The signal path s between antenna and horizon is perpendicular to the radius of the Earth. This means that we can apply Pythagoras' Theorem to find the relationship between antenna height and distance to the horizon. According to the Theorem:

$$r^2 + s^2 = (r+H)^2 = r^2 + H^2 + 2rH$$

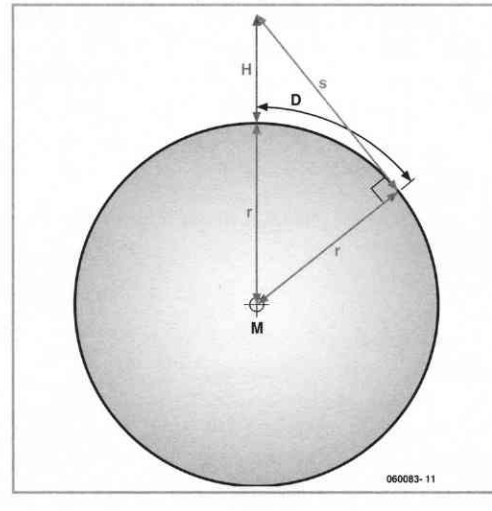

Collecting terms results in:

$$s^2 = H^2 + 2rH$$

Because H^2 is much smaller than 2rH it can be left out. So it follows that:

$$s^2 = 2rH$$

or:

$$s = \sqrt{2rH}$$

The average radius of the Earth is 6,371 km. $\sqrt{2r}$ is therefore about 113. The formula can now be simplified to:

$$s = 113\sqrt{H}$$

where s and H have to be expressed in kilometres.
An example: a VHF FM antenna is positioned at a height of 15 m. the maximum distance at which a line-of-sight connection is possible amounts to $113\sqrt{0{,}015} = 13{,}8$ km.

In practice these distances turn out to be larger than those computed using the formula. This has to do with the propagation of electromagnetic fields. It appears that the wave is subject to reflection and does curve a little with the surface of the Earth.
This is readily observed with so-called temperature inversion layers. The weather circumstances are such that hundreds of kilometres can be covered without problems using signal frequencies in the VHF range. But even without these special weather conditions the distances that can be covered appear to be larger than predicted by theory, as already mentioned.
With the antenna height of 15 m assumed earlier, the distance that can be covered appears to be of the order of 40 km, instead of the calculated 13.8 km.
How the propagation of electromagnetic waves actually works is a complicated matter covered in many excellent books and publications. However, it is known that at frequencies in the GHz range the distance that can be covered becomes progressively smaller as the frequency increases. This is also the reason why parabolic antennas for SHF frequencies are positioned as high as is practicable. The amount of transmitter power plays a secondary role in all this.
What does matter however, is the height of the receiving antenna. The same formula can be used for this antenna (that is $s = 113\sqrt{H}$). The theoretical total distance that can be covered is then the sum of both distances to the horizon.

(060083-1)

115 Simple One-wire Touch Detector

HOBBY AND MODELLING

Lars Näs

This simple circuit can be used to activate whatever you like, for example, by connecting it to microcontroller, relays, secret alarms, robot applications or just turn on LED1 which lights up as long as you touch the metal plate.

The circuit consists of voltage divider R1 and R2, one Schmitt trigger/inverter gate from a 40106 IC, a small capacitor to keep strong RF at bay and LED1 with current limiting resistor R3.
The metal plate is connected via a wire to R1. R1 and R2 together form a voltage divider. Since the current from your body is very small it's understood that R2 has a high value like 10 Megohm to maximise the voltage over R2 so it can be detected by input pin 1 of gate IC1.A. R1 has been added to prevent electro-

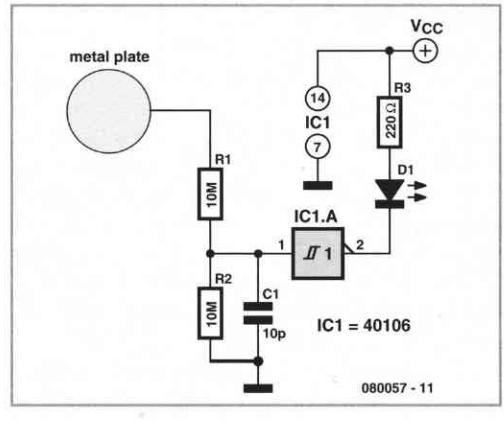

static discharge (ESD) energy from damaging the inverter gate input. ESD may occur when you have been charged with an amount of electrostatic energy by walking on a carpet with rubber soles. You can increase the sensitivity of the detector by experimenting with lower values fore R1 e.g. 1 kΩ and a smaller metal plate.
The value of pull-up resistor R3 is calculated such that the current through LED1 is below its maximum continuous rated value. Most regular LEDs are 20 mA types. The circuit still works if you remove LED1 and just have the pull-up resistor R3 connected to output pin 2 and then connect a microcontroller input pin directly to pin 2.
Do check however that the microcontroller has a weak pull-up (i.e. to $+V_{DD}$) at its port line.

(080057-I)

116 LED Phototherapy Unit

HOME AND GARDEN

Jörg Trautmann

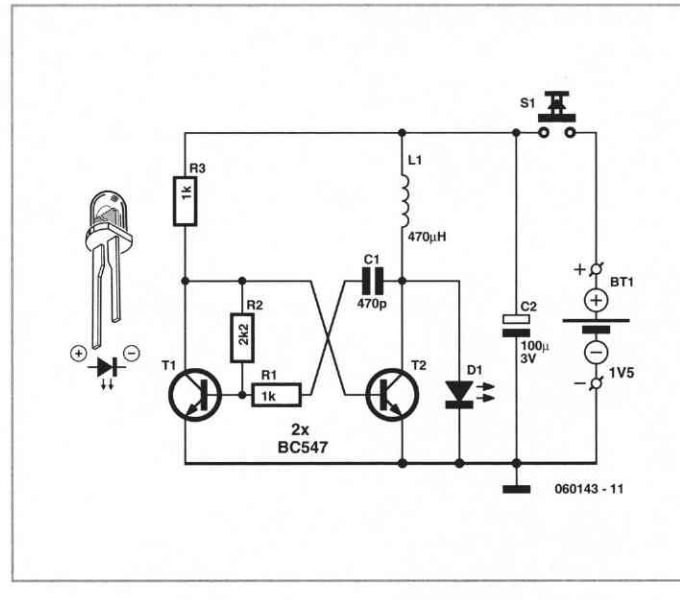

It is widely thought that light can be therapeutic for the human skin and soul. Light at the correct wavelength may also be effective against depression and allergies. There is a wide range of products on the market, at prices from a few tens of pounds to a hundred pounds or so, which are presented as universal remedies for dust allergies or hay fever. If we look at these devices in more detail, we find that their operation is relatively simple to explain.

Common to all the devices is that they emit intense red light with a wavelength of 660 nm. Some biophysicists claim that light of this wavelength can have a positive effect on the human body and can initiate healing processes.
This so-called 'phototherapy' is a treatment which is claimed to have an effect against allergic reactions in the body, since it acts against free oxygen radicals and strengthens the immune system, reducing inflammation of the mucous membrane.

Since this treatment does not take the form of a medicine, but rather the form of visible light, there is no risk of side-effects.
There has been scientific research showing that this therapy does not work in every case, but success rates as high as 72 % have been reported.

Since it may not be possible to obtain these devices under the NHS or under private medical insurance, our thoughts naturally turn to do-it-yourself.

For the enclosure we decided to use an old nasal hair trimmer. These can be obtained new for a few pounds, or you may have an old one that can be recycled. The choice of enclosure also dictates the choice of battery: the unit contains a holder for an AA-size cell. The circuit must therefore not only be very compact (there is little spare room in the enclosure), it must also be able to drive a high-brightness red LED from a voltage between 1 V and around 1.6 V.

Here again we can indulge in a little recycling: we can re-use the circuit from a Mini Project by Burkhard Kainka for driving a white LED, published in *Elektor Electronics* in June 2002. In this circuit the inductive voltage pulse is limited by the LED itself, ensuring that the output voltage will automatically match the forward voltage of the LED. The circuit is suitable as it stands for driving a highbrightness 660 nm red LED to make a do-it-yourself phototherapy unit.

In view of the small number of components, the circuit can be assembled by soldering them together directly or by using a small piece of stripboard. The circuit can operate from a wide range of voltages, and so we can use either an alkaline AA cell or an AA-size NiMH rechargeable cell with a voltage of 1.2 V. The current consumption of the circuit is about 20 mA. Assuming the circuit has been built correctly, the red LED should light brightly as soon as power is applied. Five to ten minutes' use in each nostril every day should be sufficient to obtain noticeable benefit after two weeks of treatment.

(060143-1)

117 Radio Control Signal Frame-rate Divider

HOBBY AND MODELLING

Mike Mobbs

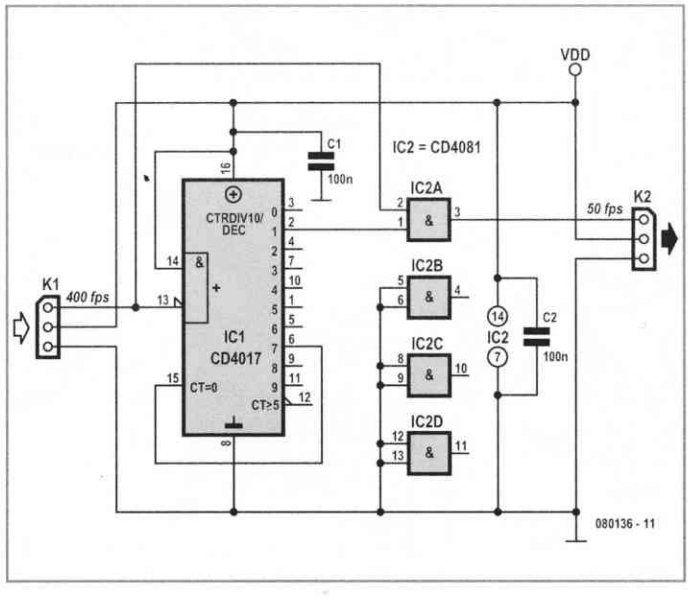

Model radio-control equipment has evolved considerably over the years, and the humble servo has grown from the 1.5 ms at 50 fps (frames per second) format, to the more precise and powerful digital variety using, typically, 400 fps, and accessories such as helicopter gyros have evolved to make use of these improved servos.

As a result, the later generations of gyros often only provide the 400 fps 'digital' signal, which is not suitable for use with the older 'analogue' servos. All is not lost, as this circuit allows only one frame in eight to reach the servo, replicating the 50 fps system. The prototype version was built using standard ICs, and sits neatly under the gyro (a CSM720 in the test setup) to provide the analogue output.

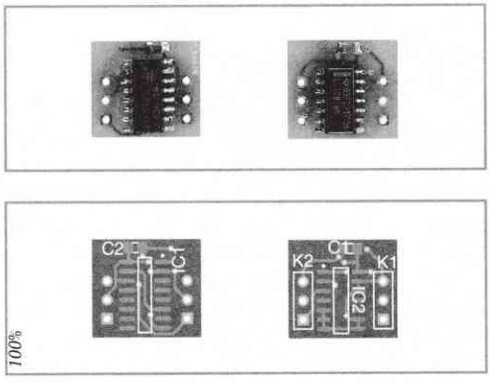

COMPONENTS LIST

Capacitors
C1, C2 = 100 nF

Semiconductors
IC1 = CD4017 (SMD)
IC2 = CD4081 (SMD)

Miscellaneous
K1 = 3-wire cable with 3-way socket
K2 = 3-wires cable with 3-pin plug
PCB, ref. 080136-1 from *www.thepcbshop.com*

The circuit uses a type 4017 CMOS decade ring counter, which is clocked by the falling edge of the input via the CP1 (enable) pin, and reset by output 7.

The first input pulse after reset sets output 1 high, which allows the next input pulse through to the output via a CMOS 4081 OR gate. Thus only one pulse in every eight is fed to the output. The use of negative logic to provide the AND function removes any risk of timing glitches, as the gating signal is established before the input pulse, and is stable for the duration of this pulse.

Other divider ratios can be used by choosing the relevant output for the reset. A miniature PCB with SMD parts on it was designed for the converter to enable it to be incorporated into a model where space is always at a premium!
The circuit is best encapsulated in heatshrink sleeving.

(080136-I)

118 LED Switching Regulator

POWER SUPPLIES, BATTERIES AND CHARGERS

Jean Claude Feltes

On the author's bench lay two ICs, waiting to be tried out: an LM3404 switching regulator (only available in a surface mount package, unfortunately), and a U2352 PWM IC. Together they could be used to make a small dimmer for LEDs. As in the case of the 'Dimmable LED lamp' (see page 203) we use a 6 V lead-acid battery as our source of energy, and a Luxeon 3 W LED as our light source. V_{CC} therefore lies between a minimum of around 5.4 V and a maximum of around 7.2 V.

The right-hand part of the circuit shows the switching regulator, which reduces the voltage from the 6 V lead-acid battery to the 4 V required by the high-power LED. As the voltage is reduced the current must increase, and so less current flows through the input power connections than does through the LED.

The LM3404 includes all the necessary control electronics along with a MOSFET switch. The voltage across resistor R_{sns} (CS, pin 5 of IC2) is proportional to the LED current and is compared against an internal reference of 200 mV. If the voltage falls below 200 mV the MOSFET is turned on for a fixed time t_{ON}. During this period the current through the inductor and the LED rises in an essentially linear fashion.
Time t_{ON} is determined by R_{ON} and the input voltage V_{IN}:

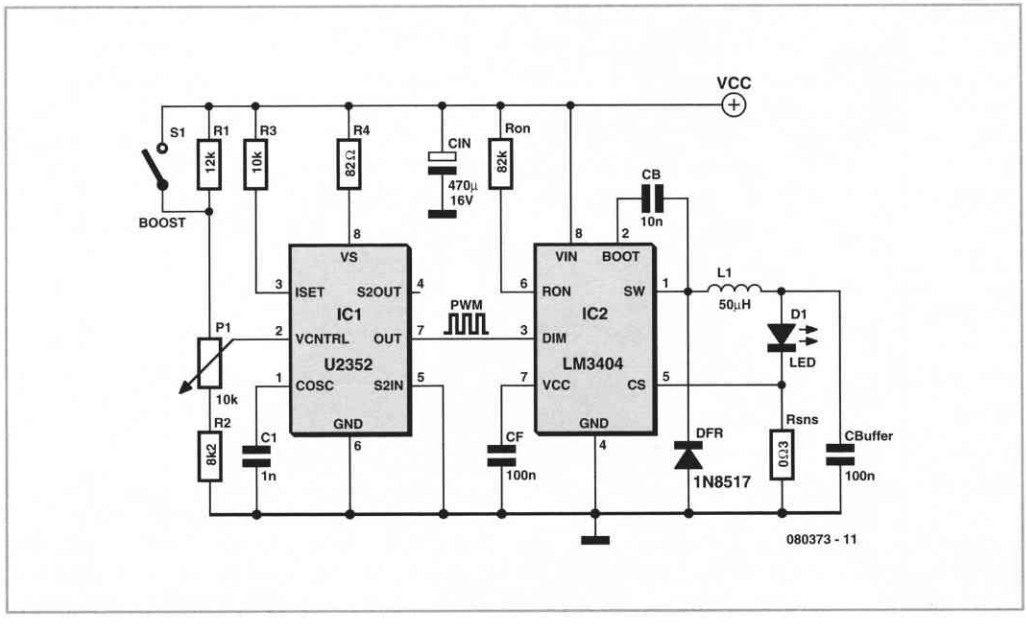

$$t_{ON} = 0{,}134\,\text{s} \cdot \frac{R_{ON}}{V_{IN}} = 1{,}83\,\mu\text{s}$$

(where R*ON* is in kΩ and V_{IN} in V).

After this time period has expired the MOSFET is turned off and an approximately linearly-falling current flows through the flyback diode and the LED until U_{sns}, the voltage across R_{sns}, reaches 200 mV, whereupon a new cycle begins. While the MOSFET is off no current flows in the supply to the regulator. The minimum off time is 0.3 μs.

Ripple current is inversely proportional to the inductance and to the switching frequency. During t_{ON} the current rises linearly and the voltage across the coil is

$$U_L = U_{IN} - U_{LED} - U_{SNS} = 1.8\,\text{V}$$

Hence

$$U_L = \frac{\Delta I_{LED}}{\Delta t}$$

With $\Delta t = t_{ON}$ we obtain a ripple current of 66 mA.

When the current reaches its lowest value the voltage across R_{sns} is 200 mV. The average value of the current is one half of the ripple current greater.

With R_{sns} = 0.3 Ω the average current is given by

$$I_{avg} = \frac{200\,\text{mV}}{300\,\text{m}\Omega} = 667\,\text{mA}$$

This is around the maximum permitted value for a 3 W LED.

The LED current can be adjusted by changing R_{sns}, for which we can use a twisted length of resistance wire. More elegantly, we can use the PWM IC to drive the DIM input of the switching regulator.

The U2352 can generate a PWM signal adjustable from 0 % to 100 % using a minimum of external components. The basic frequency of the internal triangle wave oscillator is set by C1 to around 10 kHz:

$$f_{osc} = \frac{55}{C_{osc} \cdot V_s}$$

(where f_{osc} is in kHz, C_{osc} in nF and V_s in V).

The triangle wave voltage is compared against a reference voltage set by P1, and at the output of the comparator we have our PWM signal.

The signal passes through some internal control logic before reaching the output of the device to protect the output from overload. Since we do not require this function it is disabled by taking pin 5 to ground and pin 3 to V_{CC} via R3. It is not clear from the datasheet whether resistor R4 is strictly necessary for internal voltage stabilisation.

The PWM signal is taken from the output of the U2352 to the DIM input of the LM3404 and imposes a 10 kHz pulse-width modulation on the light produced.
The 'Boost' switch (or pushbutton) forces the PWM output high and thus the LED to maximum brightness.

jean-claude.feltes@education.lu (080373-I)

119 Simple Audio Power Meter

AUDIO, VIDEO AND PHOTOGRAPHY

Michiel Ter Burg

This simple circuit indicates the amount of power that goes to a loudspeaker. The dual-colour LED shows green at an applied power level of about 1 watt. At 1.5 watts it glows orange and above 3 watts it is bright red.

The circuit is connected in parallel with the loudspeaker connections and is powered from the audio signal. The additional load that this represents is 470 Ohm (R1//R3) will not be a problem for any amplifier.

During the positive half cycle of the output signal the green LED in the dual-colour LED will be turned on, provided the
is sufficiently high. At higher output voltages, T1 (depending on the voltage divider R2/R1) will begin to conduct and the green LED will go out.

During the negative half cycle the red LED is driven via R3 and will turn on when the voltage is high enough. In the transition region (where T1 conducts more and more and 'throttles' the green LED as a result) the combination of red/green gives the orange colour of the dual-LED. By choosing appropriate values for the resistors the power levels can be adjusted to suit. The values selected here are for typical living room use.
You will be surprised at how loud you have to turn your amplifier up before you get the LEDs to go!

The resistors can be 0.25 W types, provided the amplifier does not deliver more than 40 W continuously. Above this power the transistor will not be that happy either, so watch out for that too.

Because T1 is used in saturation, the gain (Hfe) is not at all important and any similar type can be used. The power levels mentioned are valid for 4-Ohm speakers. For 8-Ohm speakers all the resistor values have to be divided by two.

(080506-I)

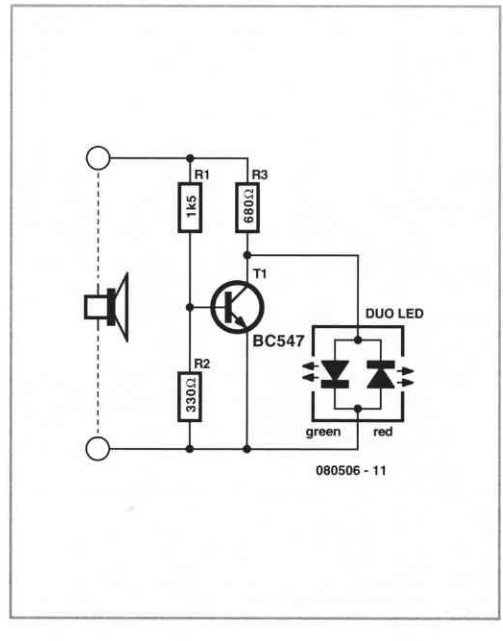

120 Rear Fog Lamp for Vintage Cars

Eric Vanderseypen

According to current legislation in many countries, vintage cars must also be fitted with a fog lamp at the rear.
In modern cars, there is a bit of circuitry associated with the fog lamp switch to prevent the fog lamp from going on when the lights are switched on if the driver forgot to switch it off after the last patch of fog cleared up.

The circuit described here extends that technology back in time. The circuit is built around a dual JK flip-flop (type 4027). T3 acts as an emitter follower, and it only supplies power to the circuit when the lights are swit-

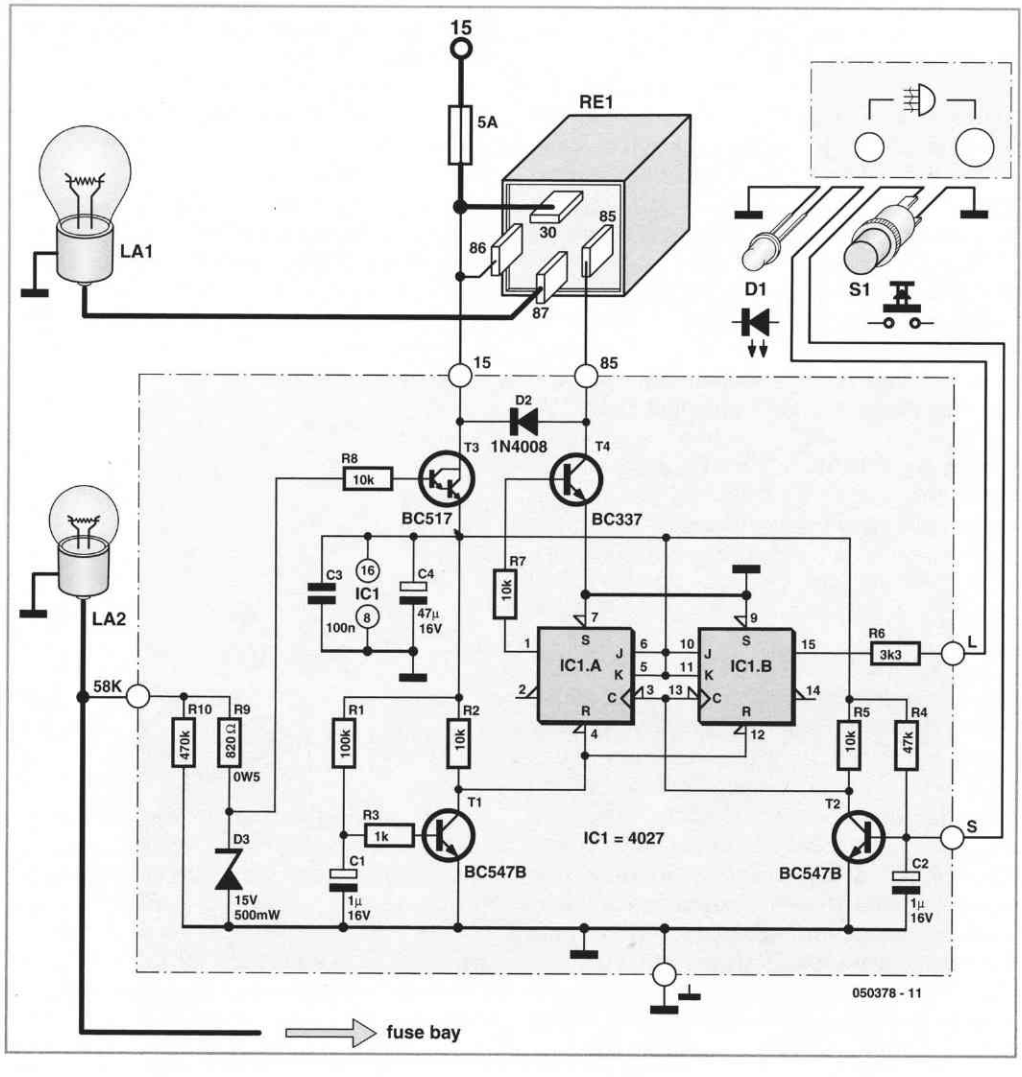

ched on. For safety reasons, the supply voltage is tapped off from the number plate lamp (L2), because it is on even if you accidentally drive with only the parking lights on. The wire that leads to the number plate lamp usually originates at the fuse box.

As the states of the outputs of IC1a and IC1b are arbitrary when power is switched on, the reset inputs are briefly set high by the combination of C1, R1 and T1 when the lights are switched on (ignition switch on). That causes both Q outputs (pins 1 and 15) to go low.

IC1a and IC1b are wired in toggle mode (J and K high). The Set inputs are tied to ground (inactive).
The driver uses pushbutton switch S1 to generate a clock pulse that causes the outputs of the flip-flops to toggle. The debouncing circuit formed by C2, R4 and T2 is essential for obtaining a clean clock pulse, and thus for reliable operation of the circuit. C1 and C2 should preferably be tantalum capacitors.
The Q output of IC1b directly drives LED D1 (a low-current type, and yellow according to the regulations). The Q output of IC1a energises relay Re1 via T4 and thus applies power to the rear fog lamp L1. Free-wheeling diode D2 protects T4 against inductive voltage spikes that occur when the relay is de-energised.

In older-model cars, the charging voltage of the generator or alternator is governed by a mechanical voltage regulator. These regulators are less reliable than the electronic versions used in modern cars. For that reason, a Zener diode voltage-limiter circuit (D3 and R9) is included to keep the voltage at the emitter of T3 below 15 V and thus prevent the 4027 from being destroyed by an excessively high voltage.
The supply voltage for the circuit is tapped off from the fuse box. An accessory terminal is usually present there. Check to make sure it is fed from the ignition switch.
The pushbutton switch must be a momentary-contact type (not a latching type).
Ensure that the pushbutton and LED have a good ground connection. Fit the LED close to the button.

The following 'Bosch codes' are used in the schematic:

15 = +12 V from ignition switch
58K = number plate lamp
86 = relay coil power (+) IN
85 = relay coil power OUT
30 = relay contact (+) IN
87 = relay contact OUT

(050378-1)

Note
This circuit is only suitable for use in cars with 12-V electrical systems and negative ground.

121 12V Fan Directly on 230 V

POWER SUPPLIES, BATTERIES AND CHARGERS

Ton Giesberts

This circuit idea is certainly not new, but when it comes to making a trade-off between using a small, short-circuit proof transformer or a capacitive voltage divider (directly from 230 V mains voltage) as the power supply for a fan, it can come in very handy. If forced cooling is an afterthought and the available options are limited then perhaps there is no other choice. At low currents a capacitive divider requires less space than a small, short-circuit proof transformer.

R1 and R2 are added to limit the inrush current into power supply capacitor C2 when switching on. Because the maximum rated operating voltage of resistors on hand is of-

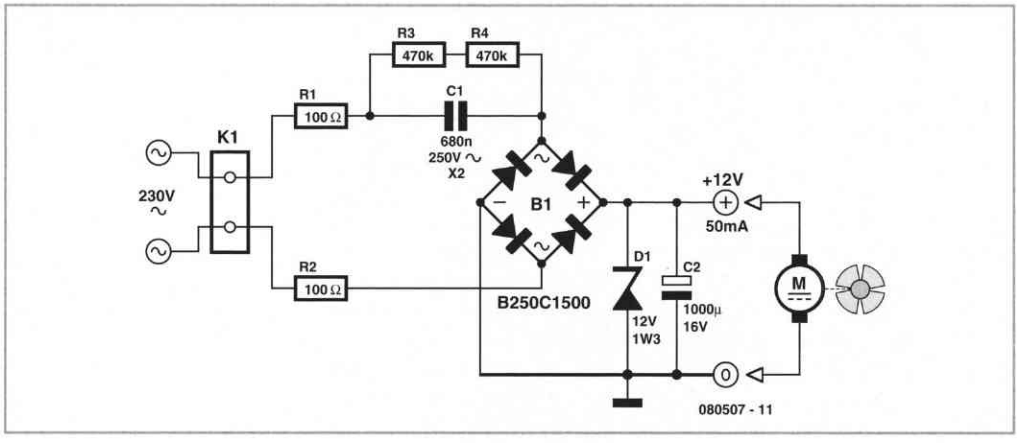

ten not known, we choose to have two resistors for the current limit. The same is true for the discharge resistors R3 and R4 for C1. If the circuit is connected to a mains plug then it is not allowed that a dangerous voltage remains on the plug, hence R3 and R4.

Capacitor C1 determines the maximum current that can be supplied. Above that maximum the power supply acts as a current source. If the current is less then zener diode D1 limits the maximum voltage and dissipates the remainder of the power.
It is best to choose the value of C1 based in the maximum expected current. As a rule of thumb, start with the mains voltage when calculating C1. The 12 V output voltage, the diode forward voltage drops in B1 and the voltage drop across R1 and R2 can be neglected for simplicity. The calculated value is then rounded to the nearest E-12 value.

The impedance of the capacitor at 50 Hz is $1/(2\pi \cdot 50 \cdot C)$. If, for example, we want to be able to supply 50 mA, then the required impedance is 4600 Ω (230 V/50 mA). The value for the capacitor is then 692 nF. This then becomes 680 nF when rounded. To compensate for mains voltage variations and the neglected voltage drops you could potentially choose the next higher E-12 value. You could also create the required capacitance with two smaller capacitors. This could also be necessary depending on the shape of the available space. It is best to choose for C1 a type of capacitor that has been designed for mains voltage applications (an X2 type, for example).

(080507-I)

122 Direction Sensitive Light Barrier

HOME AND GARDEN

Heino Peters

With two light barriers closely positioned one after the other it is possible to establish in which direction they have been crossed. If, for example, you place it at the entrance of the toilet then you can use it to control the lights: on when entering and off when leaving the room. The circuit for this has many similarities with the modulated light barrier appearing on page 236.

There are two ways to position the light barriers, namely a completely duplicated installation in opposing directions (this to prevent mutual interference) and a version with one

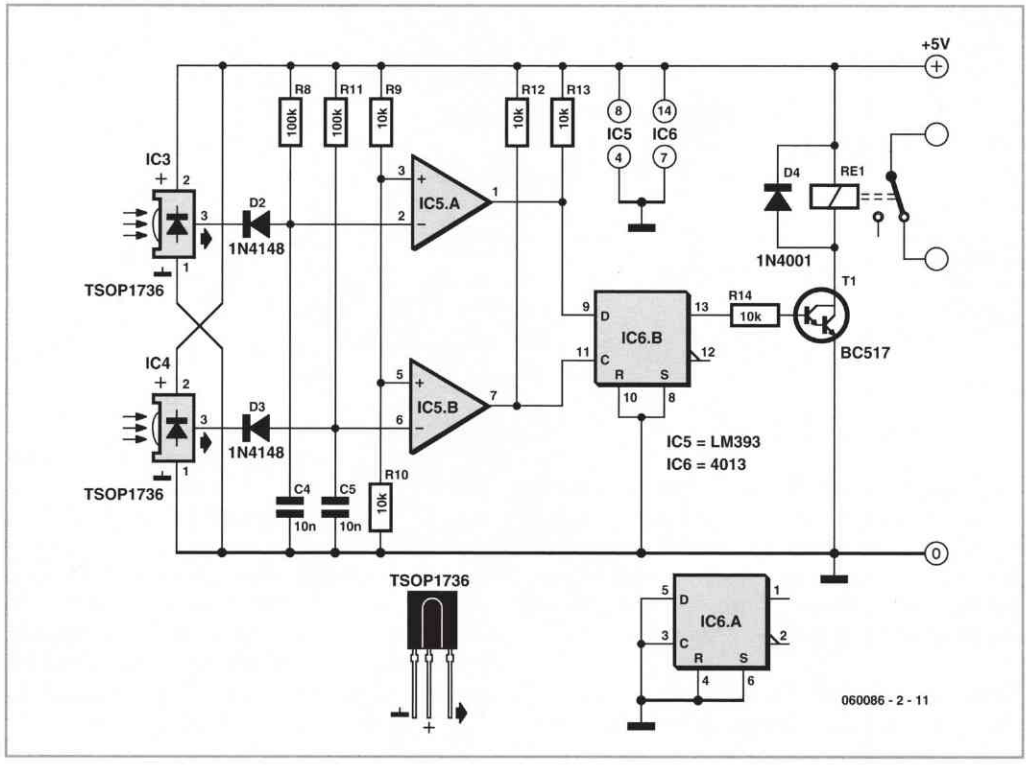

IR transmitter and two receivers. Both types of installation are shown here, which one is most suitable depends on the actual application.

When used in a doorway, one transmitter is sufficient if the receivers are placed about 5 cm apart. With a wider passage, an installation with two separate IR-transmitters is a better solution. This circuit has a range of several meters, even if the sun shines directly on the receiver!

We use the exact same IR-transmitter(s) as for the modulated light barrier. For the installation with two separate IR-transmitters it is sufficient to duplicate R6, T1, D1, C3 and R7 from the circuit of the modulated light barrier. Output OUT (pin 3) of IC2 can drive two of these IR-drivers without any difficulty. The receivers are slightly different than those of the modulated light barrier and the circuit is the same for both types of installation.

We again use the TSOP1736, which is sensitive to IR-light that is modulated at a frequency of 36 kHz. D2, R8 and C4 ensure that the received pulses from IC3 at the output of IC5a result in a '1' when the beam is not interrupted. When the beam is interrupted this out-

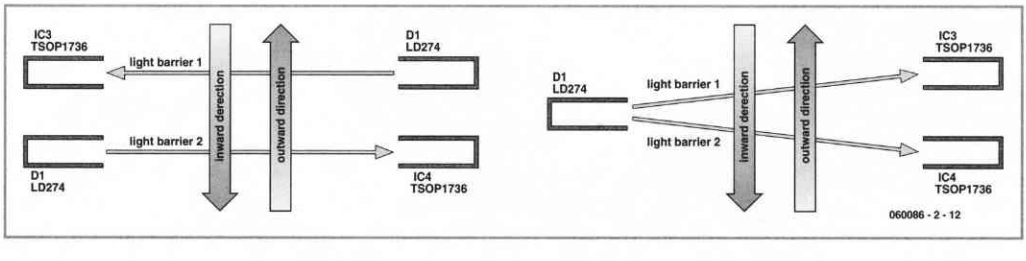

put will become a '0' within about 1 ms. In the same way IC5b generates a '0' when IC4 stops receiving IR-light. The 4013 CMOS-IC used here contains two Dflipflops, of which we use only one. The instant that light barrier 2 (IC4) is unblocked again, is used to clock the state of light barrier 1 (IC3) through to output Q1. This signal drives the relay via T2, which operates the light in the room. The circuit therefore turns the light on or off the moment that light barrier 1 is uninterrupted.

(060086-2)

123 Gas Flow Meter

TEST AND MEASUREMENT

R. Pretzenbacher

The most surprising thing about this circuit is the sensor that it uses: a 4.5 V miniature torch bulb. The glass envelope is (carefully!) broken and then the pieces of glass removed, leaving just the filament intact. The filament forms the actual sensor element (see **Figure 1**).

As you can see from the circuit diagram in **Figure 2**, the bulb filament is supplied with 20 mA from a constant current source, with the result that the filament warms up.
The current, which can be adjusted using P1, is a compromise between the sensitivity of the unit and its operating life. If the current is too high the filament will reach too high a temperature and sooner or later will burn out. The filament has a positive, although relatively small, temperature coefficient of resistance: the hotter the filament the greater its resistance and so the greater will be the voltage dropped across it at a given constant current.

If air (or another non-flammable gas) flows through the pipe in which the filament is mounted, the filament will be cooled and the voltage across it will fall. The greater the air flow the cooler the filament and so the lower the voltage. The relationship between flow rate and voltage is reasonably linear. An important use of this measurement technique is in the air intake of car engines, where an ordinary thin heated wire is used as the sensing element in place of the lamp filament. Operational amplifier IC1.A is used to subtract the voltage drop across the coil from a voltage produced by the PICAXE microcontroller (IC3) via its PWM output on pin 5, filtered by the RC-network comprising R9 and C5. The second operational amplifier amplifies the residual signal as needed. The gain can be adjusted using P2.

The PICAXE08M from Revolution Education Ltd is a PIC microcontroller that can be programmed in BASIC (see *www.picaxe.com*).
When power is applied the PICAXE automatically goes through the offset calibration procedure, which helps the unit achieve excellent sensitivity. Simultaneously the measured voltage is digitised within the PICAXE. The result of the flow rate measurement is made available both as an analogue voltage (pin 7 of IC1.B) and in digital form on the TTL-level RS-232 output K1.

The BASIC program that runs in the PICAXE is available for free download from the Elektor

1

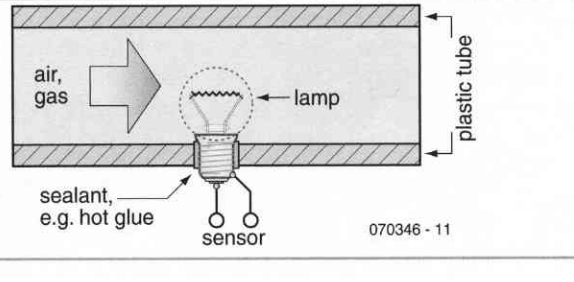

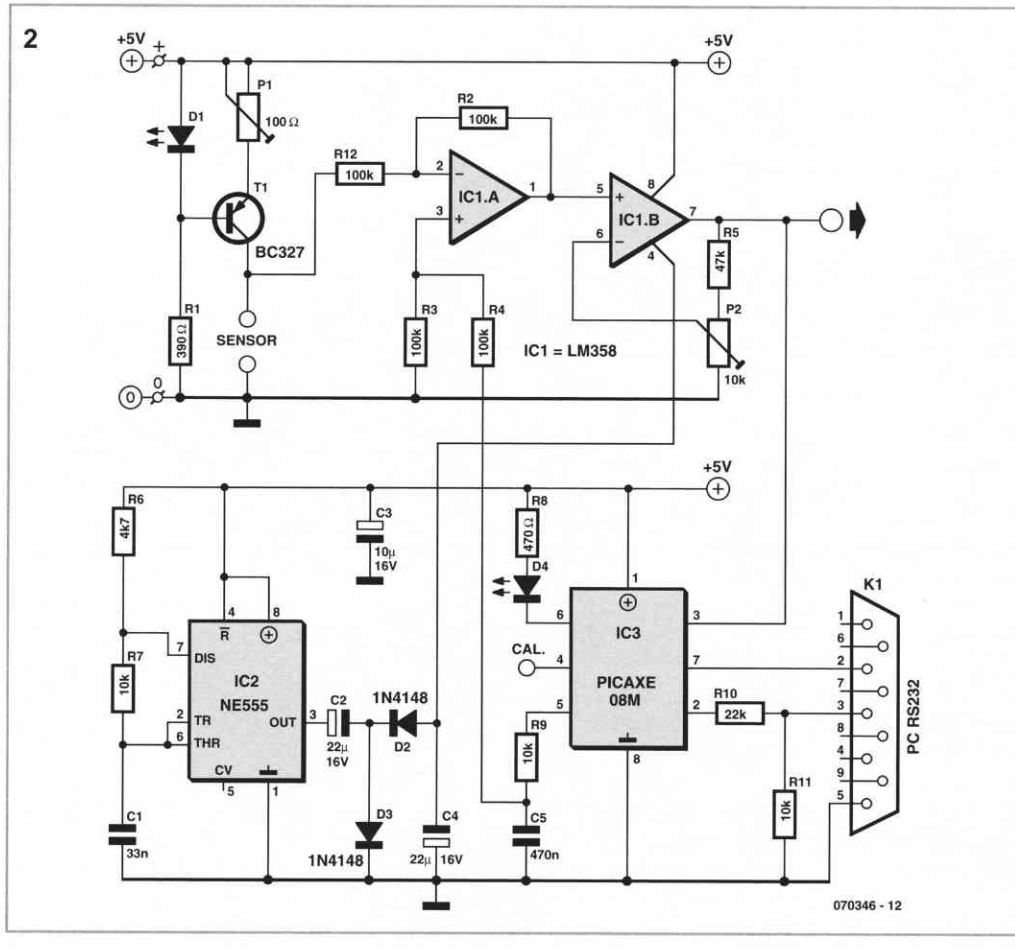

website at *www.elektor.com*, look for file # 070346-11.zip.

The NE555 is present only to provide a small negative voltage of around –2 V for the LM358. This lets us use this low-cost operational amplifier in such a way that its output can swing down to 0 V. The NE555 inverter circuit allows the unit as a whole to be powered from a single 5 V supply.

Using this circuit the author has obtained a usable output signal from 0 V to 3.5 V when measuring very gentle flows from 0 nl/h to only 120 nl/h. He used the circuit to check the operation of an industrial nitrogen (N2) flow rate meter.

It must be admitted that a circuit as simple as the one described here has a few infelicities. The sensitivity of the unit is highly dependent on the filament used and on the current through the filament (although this is compensated for by the calibration that the PICAXE carries out).

Also inconvenient is the strong dependency on the temperature of the gas whose flow rate is being measured. To compensate for this the gas flowing through the pipe must be heated to a defined temperature before being passed over the filament.

(070346-I)

And we cannot emphasise strongly enough: **do not under any circumstances use this circuit with flammable gases!**

124 Dimmable LED Light

Jean-Claude Feltes

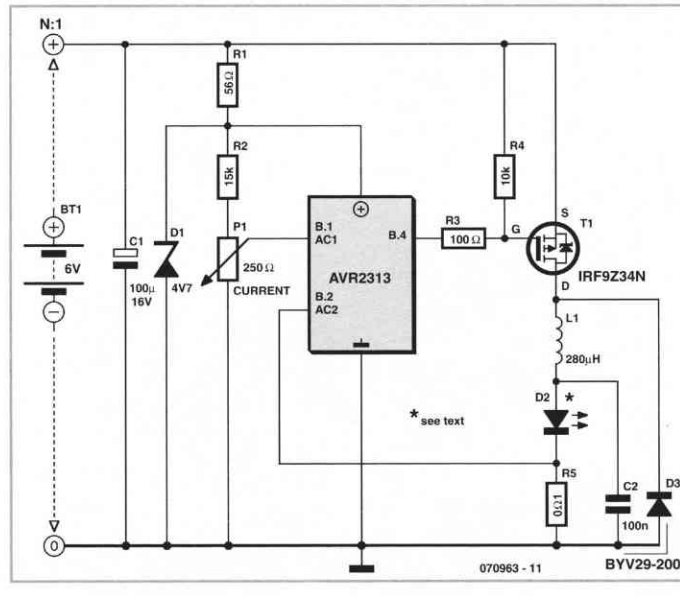

As we all know, LEDs are dimmed by altering the current flowing through them, not the voltage. We achieve this effect in this circuit by using an AVR microcontroller (the 2313 from Atmel) operating in comparator mode (**Figure 1**). The nominal value is preset on comparator input AC1 and compared with the voltage (proportional to the LED current) at AC2.

On power-up the microcontroller sets the gate of the MOSFET (connected to output B.4) to 0 so that it conducts; a linearly rising current then flows through the choke and LED.

The voltage drop across the 0.1-Ω shunt resistor is proportional to this current. Once the nominal voltage is reached, the microcontroller switches off the MOSFET and waits a few milliseconds.

During this time a linearly decaying current flows through the choke, LED, shunt and recovery diode. Then everything restarts and it happens all over again. The result is a direct current voltage with a triangular waveform overlaid. The Bascom program for the microcontroller (see **Listing**) is short and simple to understand.

Listing

```
'SMPSU for Luxeon LED using PMOS
$regfile = "2313def.dat"
$crystal = 4000000

config pind.0 = output
DDRB = &B00010000          'B.4 = Output
ACSR = &B00000000          'Set up as a comparator
dim i as byte
Portb.4 = 1                'off

do
Portb.4 = 0                'Switch on inductance
do
loop until acsr.aco = 1 'When Imax reached => Switch
                           off
Portb.4 = 1
waitus 5
loop
```

In this circuit we use a 6-V lead-acid gelcell battery for the power supply; although these are heavy, they are dependable and simple to charge. The 56-Ω resistor and zener diode act

to limit and stabilise the microcontroller supply voltage, which is used also as a reference voltage for the voltage divider set with P1.

The LED chosen is a Luxeon LXHL-LW3C (nominal values: 3 watts, $U_{LED} = 3.7$ V, $I_{LED} = 0.7$ A). A 100-nF capacitor connected in parallel with the LED and shunt is wired direct to the PCB; this is to eliminate possible interference effects from cable capacity. The 100-μF electrolytic capacitor is vital to smooth the 6 V operating voltage, which would otherwise 'droop' or 'sag'. The choke should not saturate at maximum current but match the load of the current being carried. To avoid generating square-wave effects that could produce false current values, the shunt resistor used should be a carbon film type, not wirewound.
The lamp, used for speleology (cave exploration), has operated very reliably over a lengthy period and is more economical in battery use than a halogen lamp.
One problem arose in use when the LED got (far) too hot. It appeared that the current cut-off value was not being observed, due possibly to microcontroller failure or a dirty (or faulty) trimpot. If the latter's wiper loses contact with the carbon track the comparator input becomes open-circuit and can become any old value (as then does the LED current). Installing a watchdog timer could help (to restart the microcontroller promptly), also a pulldown resistor from the comparator input to ground.

(070963-I)

Source code and hexfile for the program can be downloaded free of charge at *www.elektor.com*.

125 Simple Hybrid Amp

AUDIO, VIDEO AND PHOTOGRAPHY

Frans Janssens

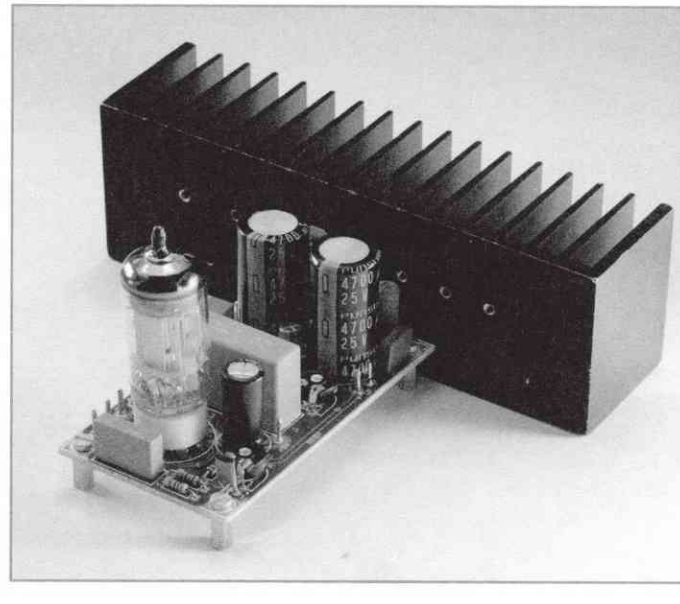

The debate still goes on as to which are better, valves or transistors. We don't intend to get involved in that argument here. But if you can't make your mind up, you should try out this simple amplifier.

This amplifier uses a valve as a pre-amplifier and a MOSFET in the output stage. The strong negative feedback makes the frequency response as flat as a pancake. In the prototype of the amplifier we've also tried a few alternative components. For example, the BUZ11 can be replaced by an IRFZ34N and an ECC83 can be used instead of the ECC88. In that case the anode voltage should be reduced slightly to 155 V. The ECC83 (or its US

A few specifications

(IRFZ34N, ECC83, 155 V using 064011-1 and 064016-1, U_{ff} = 12.6 VDC, 8 Ω load, T2 set to 1.3 A)

min. gain	12.3x
max. gain	31.6x
input sensitivity	0.64 V at min. gain
bandwidth	>200 kHz
LF roll-off	11 Hz
THD+N (1 kHz / 1W / 8 Ω)	0.09% (BW = 80 kHz)
supply ripple (100 Hz)	–80 dB (at 1 W output)
Pmax (1% THD)	7.6 W (1 kHz)
damping factor	17

equivalent the 12AX7) requires 2 x 6.3 V for the filament supply and there is no screen between the two triodes, normally connected to pin 9. This pin is now connected to the common of the two filaments. The filaments are connected to ground via R5.

If you're keeping an eye on the quality, you should at least use MKT types for coupling capacitors C1, C4 and C7. Better still are MKP capacitors. For C8 you should have a look at Panasonic's range of audio grade electrolytics.

P1 is used to set the amount of negative feedback. The larger the negative feedback is, the flatter the frequency response will be, but the smaller the overall gain becomes. With P2 you can set the quiescent current through T2. We have chosen a fairly high current of 1.3 A, making the output stage work in Class A mode. This does generate a relatively large amount of heat, so you should use a large heatsink for T2 with a thermal coefficient of 1 K/W or better.

For L1 we connected two secondary windings in series from a 2×18V/225 VA toroidal trans-

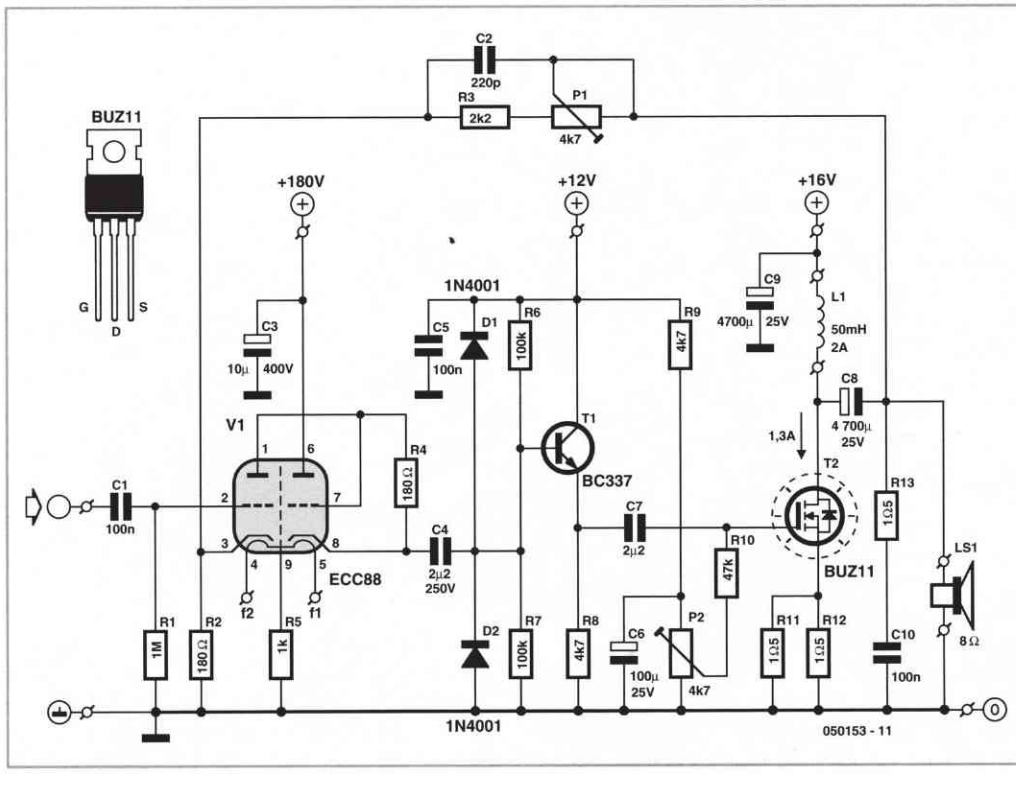

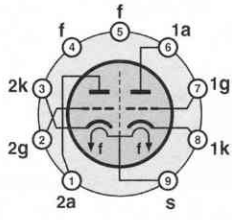

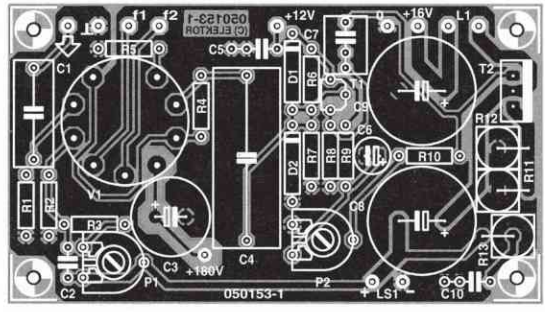

80%

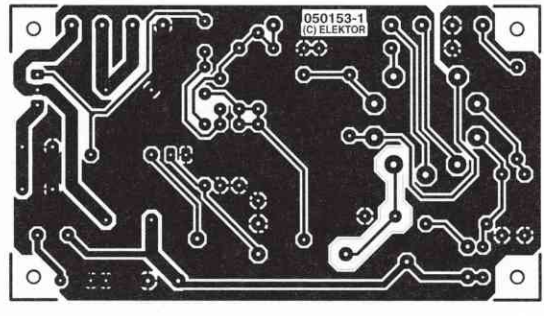

80%

former. The resulting inductance of 150 mH was quite a bit more than the recommended 50 mH. However, with an output power of 1 W the amplifier had difficulty reproducing signals below 160 Hz. The distortion rose to as much as 9% for a signal of 20 Hz at 100 mW. To properly reproduce low-frequency signals the amplifier needs a much larger coil with an iron core and an air gap. This prevents the core from saturating when a large DC current flows through the coil.

Such a core may be found in obsolete equipment, such as old video recorders. A suitable core consists of welded E and I sections. These transformers can be converted to the required inductor as follows: cut through the welding, remove the windings, add 250 to 300 windings of 0.8 mm enamelled copper wire, firmly fix the E and I sections back

COMPONENTS LIST

Resistors
R1 = 1 MΩ
R2, R4 = 180 Ω
R3 = 2kΩ2
R5 = 1 kΩ
R6, R7 = 100 kΩ
R8, R9 = 4kΩ7
R10 = 47 kΩ
R11, R12, R13 = 1Ω5 5W
P1, P2 = 4kΩ7 preset

Capacitors
C1 = 100 nF 250V MKT, pitch 15mm, 7x18 mm max.
C2 = 220 pF
C3 = 10 µF 400V radial, pitch 5 mm, ∅ 13mm max.
C4 = 2µF2 250V, pitch 27.5 mm, 11x30 mm
C5, C10 = 100 nF
C6 = 100 µF 25V radial
C7 = 2µF2, pitch 5 or 7.5mm
C8, C9 = 4700 µF 25V radial, pitch 7.5mm, ∅ 18mm max.

Inductors
L1 ≥ 50 mH, not on board, see text

Semiconductors
D1, D2 = 1N4001
T1 = BC337
T2 = BUZ11 (or IRFZ34N)

Miscellaneous
V1 = ECC88 with 9-pin valve socket (Chelmer Valve Company)
Heatsink for T2, ≤ 1 K/W
PCB, ref. 050153-1 from The PCBShop

together with a piece of paper in between as isolation.

The concepts used in this circuit lend themselves very well to some experimentation. The number of supply voltages can be a bit of a problem to start with. For this reason we have designed a power supply especially for use with this amplifier (Quad power supply for hybrid amp). This can of course just as easily be used with other amplifiers.

The supply uses a cascade stage to output an unstabilised voltage of 170 V for the SRPP (*single rail push pull*) stage (V1). During initial measurements we found that the ripple on this supply was responsible for a severe hum at the output of the amplifier. To get round this problem we designed a separate voltage regulator (High-voltage regulator with short circuit protection, see page 126)), which can cope with these high voltages.

If you use a separate transformer for the filament supply you can try and see if the circuit works without R5. During the testing we used a DC voltage for the filament supply.

Although you may not suspect it from the test measurements (see specifications), this amplifier doesn't sound bad. In fact, it is easily better than many consumer amplifiers. The output power is fairly limited, but is still enough to let your neighbours enjoy the music as well. It is possible to make the amplifier more powerful, in which case we recommend that you use more than one MOSFET in the output stage.
The inductor also needs to be made beefier. Since this is a Class A amplifier, the supply needs to be able to output the required current, which becomes much greater at higher output powers. The efficiency of the amplifier is a bit over 30%.

(050153-1)

126 The Gentle Touch

POWER SUPPLIES, BATTERIES AND CHARGERS

Rainer Reusch

Consumer appliances these days hardly ever have a proper mains switch. Instead, appliances are turned on and off at the touch of a button on the remote control, just like any other function.

This circuit shows how a device (as long as it does not draw too high a current) can be switched on and off using a pushbutton.

The approach requires that a microcontroller is already available in the circuit, and a spare input port pin and a spare output port pin are

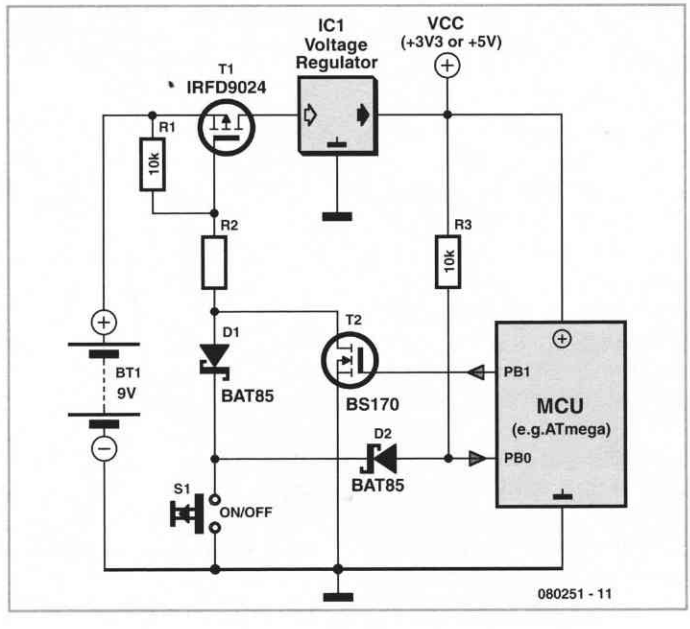

required, along with a little software. When power is applied T1 initially remains turned off. When the button is pressed the gate of T1 is taken to ground and the p-channel power MOSFET conducts. The microcontroller circuit is now supplied with power.

Within a short period the microcontroller must take output PB1 high. This turns on n-channel MOSFET T1 which in turn keeps T1 turned on after the pushbutton is released.

Now the microcontroller must poll the state of the pushbutton on its input port (PB0) at regular intervals. Immediately after switch-on it will detect that the button is pressed (a low level on the input port pin), and it must wait for the button to be released.

When the button is next pressed the device must switch itself off: to do this the firmware running in the microcontroller must set the output port pin to a low level. When the button is subsequently released T1 will now turn off and the supply voltage will be removed from the circuit.

The circuit itself draws no current in the off state, and for (rechargeable) battery-powered appliances it is therefore best to put the switch before the voltage regulator.

For mains-powered devices the switch can also be fitted before the voltage regulator (after the rectifier and smoothing capacitor). Since there is no mains switch there will still be a small standby current draw in this case due to the transformer. Be careful not to exceed the maximum gate-source voltage specification for T1: the IRFD9024 device suggested can withstand up to 20 V. At lower voltages R2 can be replaced by a wire link; otherwise suitable values for the voltage divider formed by R1 and R2 must be selected.

The author has set up a small website for this project at *http://reweb.fh-weingarten.de/elektor*, which gives source code examples (which include dealing with pushbutton contact bounce) for AVR microcontrollers suitable for use with AVR Studio and GNU C. Downloads are also available at *www.elektor.com*.

(080251-I)

127 Automatic Range Hood

HOME AND GARDEN

Heino Peters

Come to think about it, it's a bit strange that range hoods in our kitchens don't switch on and off automatically. After all, a simple temperature sensor under the hood can detect whether a burner is on. The circuit described here goes a step further and compares the temperature under the hood with the temperature just outside the hood. At a certain (adjustable) tem-

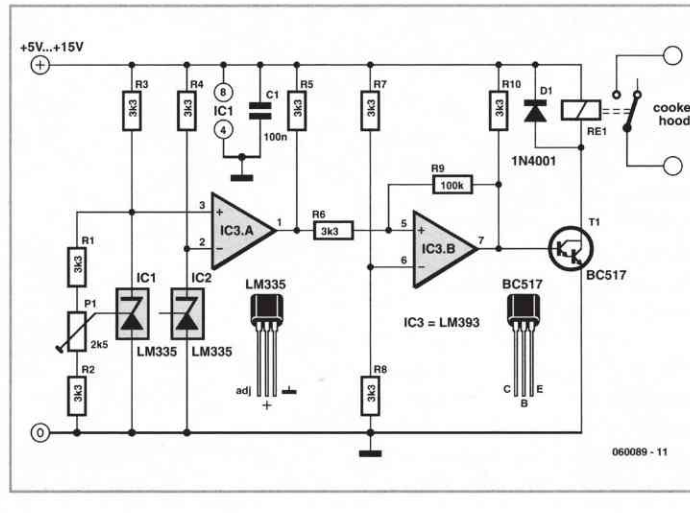

perature difference, the hood will be switched on, possibly along with the lamp under the hood. After the burners are shut off, the hood fan and lamp will switch off again by themselves. The advantage of using two sensors is that the hood will have the same switching characteristics in the summer as in the winter.

When building the circuit, it's important to ensure that IC1 is located beneath the hood in the middle and IC2 is located next to the hood or above it. If the temperature under the hood is higher than the temperature outside it, the open-collector output of IC3 will be pulled up to the supply voltage by R6. The combination of IC3 and R7–R11 forms a Schmitt trigger, which we need because the output of IC3a does not change immediately from 0 V to the supply voltage (or vice versa) in the transition region. The output of the IC3b will thus be at the supply voltage, which will switch on T1 via R11. That causes the relay to engage and switch on the fan and lamp of the range hood. R2 can be used to adjust the output voltage of IC1 over a range of approximately 0.1 V, which corresponds to around 10 °C. It's a good idea to use a supply voltage that matches the operating voltage of the relay. It's also convenient to fit the relay in a small box with an electrical outlet and plug so it can be easily and safely inserted between the plug and outlet of the range hood.

The circuit works best with a gas cooker, because the heat rises immediately after a burner is lit. With a ceramic or inductive cooking top, it takes a bit longer for the relay to be actuated.

(060089-1)

128 SimpleProg

MICROCONTROLLERS

Easy ISP for AVR microcontrollers

Dr. Thomas Scherer

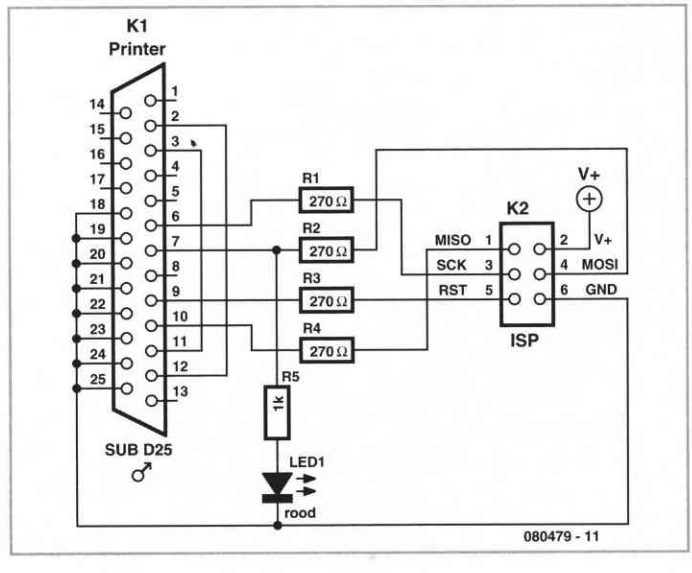

A trawl of the Internet will reveal no end of simple AVR microcontroller programmer designs for connection to the parallel port of a PC. Here at Elektor we have also published a few variations on this particular theme. One thing that is perhaps surprising is how different the various designs are from one another.

One of the main reasons for the differences is that the programmers are intended for use with different AVR microcontroller development environments, although in some cases it is perhaps not always made as clear as it ought to be which one this is. The circuit shown here was developed as part of the current

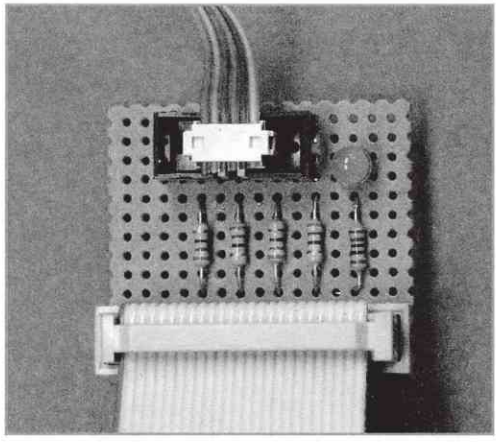

Elektor AVR-ATM18 project series. Troubled by a nagging feeling that a circuit is not a proper circuit unless it contains at least one active component, the author added an LED to show when data transfer is occurring. In fact, this visual feedback is extremely helpful when troubleshooting, and is a worthwhile addition even if our aim is to make the simplest possible programmer.
Construction is very straightforward. The circuit can be built on a small piece of perforated board, using a flat cable with a 25-way sub-D plug crimped to one end and a 26-way IDC header crimped to the other to connect to the PC's parallel interface. The six-way ISP cable is plugged into a suitable box header on the perforated board. If six-way headers prove hard to get hold of, a ten-way type as shown in the photograph can be used instead with just the middle six pins wired.
The programmer is compatible with the STK200 and STK300 from Kanda and will therefore work in conjunction with any program that offers those devices as options. It works perfectly with BASCOM [1], and Kanda also offers excellent (and free) programming software [2].
Observe that this unit uses 5 V signal levels. The target microcontroller should therefore also be powered from a 5 V supply, at least while it is being programmed.

(080479-I)

Weblinks
[1] *www.mcselec.com*
[2] *www.kanda.com/index. php3?bc=direct&bw =%2Favr-isp-software.html*

129 USB Fuse

COMPUTERS AND INTERNET

Andreas Köhler

Life in the 21st century would be almost unbearable without some of the computer peripherals that PC users now look on as essentials — take for example the USB powered teacup warmer; this device is obviously an invaluable productivity tool for all users but it could prove a little tiresome if the extra current it draws from the USB port is sufficient to produce a localised meltdown on the motherboard. In a slightly more serious vein a similar situation could result from a carelessly wired connector in the design lab during prototyping and development of a USB ported peripheral. What's needed here is some

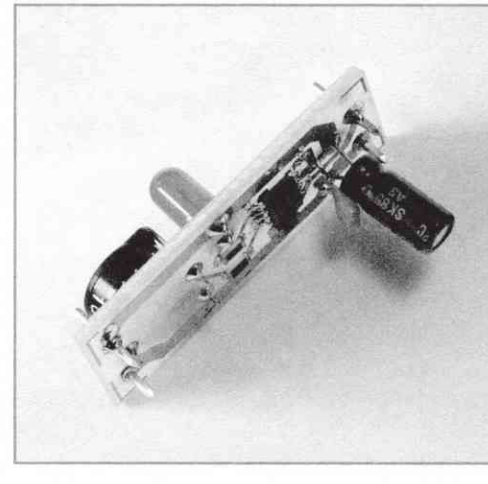

form of current limiting or fuse to prevent damage to the motherboard.

The MAX1562 shown in **Figure 1** is a purpose-built USB current limiter from the chip manufacturers Maxim. The device operates with a supply voltage from 4.0 to 5.5 V with an operating current of typically 40 μA or 3 μA in standby mode. The circuit introduces a very low resistance in the power line (typically 26 mΩ but guaranteed less than 50 mΩ) from an internal MOSFET. The FET gate bias voltage is generated on-chip from a charge pump circuit.

1

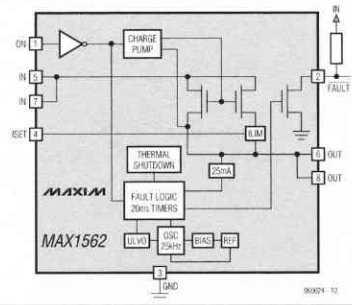

2

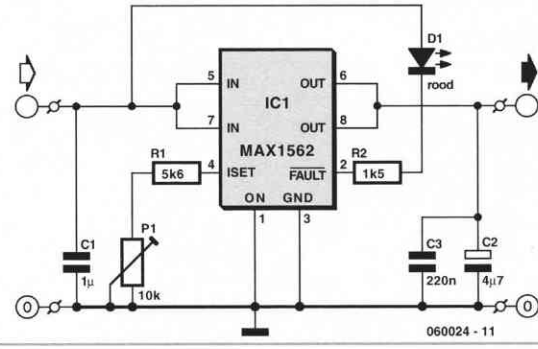

The chip can distinguish between an overload and a short circuit condition in the supply line by measuring the voltage drop across its internal resistance; if the voltage is less than 1 V a short circuit is assumed and the chip pulses a (limited) output current every 20 ms in an effort to raise the output voltage.

This approach will eventually be successful if the short circuit was caused by a large value capacitor across the USB supply pins or an external hard drive which have a high in-rush at start up. If the supply rail is not pulled up within the first 20 ms the $\overline{\text{FAULT}}$ output (pin 2) is driven low.

The output current limit is set by a single resistor on pin 4 (ISET):

$$I_{LIM} = \frac{17120}{R_{SET}}$$

The circuit diagram shows a fixed 5.6 kΩ resistor in series with a 10 kΩ preset giving an adjustable current limit between 1.097 and

3a

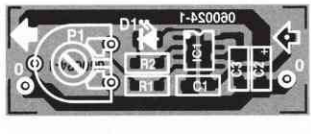

3b

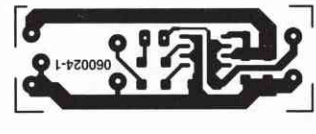

COMPONENTS LIST

Resistors
R1 = 5kΩ6 (SMD 1206)
R2 = 1kΩ5 (SMD 1206)
P1 = 10 kΩ preset

Capacitors
C1 = 1 μF (SMD 1206)
C2 = 4μF7 10 V, tantalum
C3 = 220 nF (SMD 1206)

Semiconductors
D1 = LED, low current
IC1 = MAX1562ESA

PCB, ref. 060024-1

3.057 A. This range should be sufficient for the majority of applications. Increasing the preset resistance reduces the current limit level.

Any intermittent connection in the preset (caused by a dirty track etc.) will switch the chip into shut down. The MAX1562 also contains a thermal cut out which turns off the output when the chip temperature exceeds 160 degrees C.

Figure 2 shows a diagram of the manufacturer's application circuit. The $\overline{\text{FAULT}}$ output drives an LED via a series limiting resistor which reduces the LED current to 2 to 3 mA. The MAX1562 is available in a HESA variant (with an active high ON signal) or ESA version (with an active low $\overline{\text{ON}}$ signal). The chip is packaged in an 8-pin SMD outline. **Figure 3** shows a small PCB layout for the circuit using mostly SMD components.

(060024-1)

130 Solar Powered Automatic Lighting

POWER SUPPLIES, BATTERIES AND CHARGERS

C. Tavernier

You're doubtless familiar with the little solar-powered automatic lighting units found in DIY stores each year as summer approaches, sold in packs at ridiculously cheap prices. They certainly work, but their electronics and most of all their housings, manufactured for extreme cheapness, have a life expectancy that's proportional to the purchase price...

Our project here adopts a slightly different approach. It's intended for use in conjunction with existing or still-to-be-built garden lighting systems, which in particular may be more powerful than the cheapo stuff mentioned above. The project described here cannot operate alone, but must be used in conjunction with the 'Solar-powered Battery Charger' project described on page 115. This charger has a connector already provided to interface directly with the garden lighting systems described here.

So the charger handles the 'intelligent' charging of the battery by the solar panels, while the circuit shown here takes care of the control of the lighting part. Naturally, it includes a photocell, in the form of an LDR (light dependent resistor), to measure the ambient light and, to avoid wasting the precious energy stored in the batteries, a presence detector so as to only light up when there is a need. Furthermore, the detector has a time delay, which makes the lighting unit very convenient in practice.

Given that it has to be used in conjunction with the solar-powered battery charger, the circuit is obviously very simple, as you can see from the schematic diagram. It uses just a single IC, a Microchip type 12C671 PIC microcontroller – i.e. the same type used in the charger, to make your buying easier.

Let's remember that this IC includes an analogue-digital convertor with several inputs, which is obviously going to be put to good use here. It's powered from the stabilized 5 V supplied by the charger, via pins 3 and 4 of the connector provided for this purpose.

Take a look for a moment at the charger circuit and note that, when it is used in conjunction with the automatic lighting system, the jumper between pins 1 and 2 of its connector has to be removed. This allows relay Re2 in the charger to be driven by our automatic lighting system, instead of directly by the charger itself. So, the load fed by the automatic charger here comprises the lamps or other lighting devices to be controlled. However, the excessive battery discharge protection is retained, as this information, from output

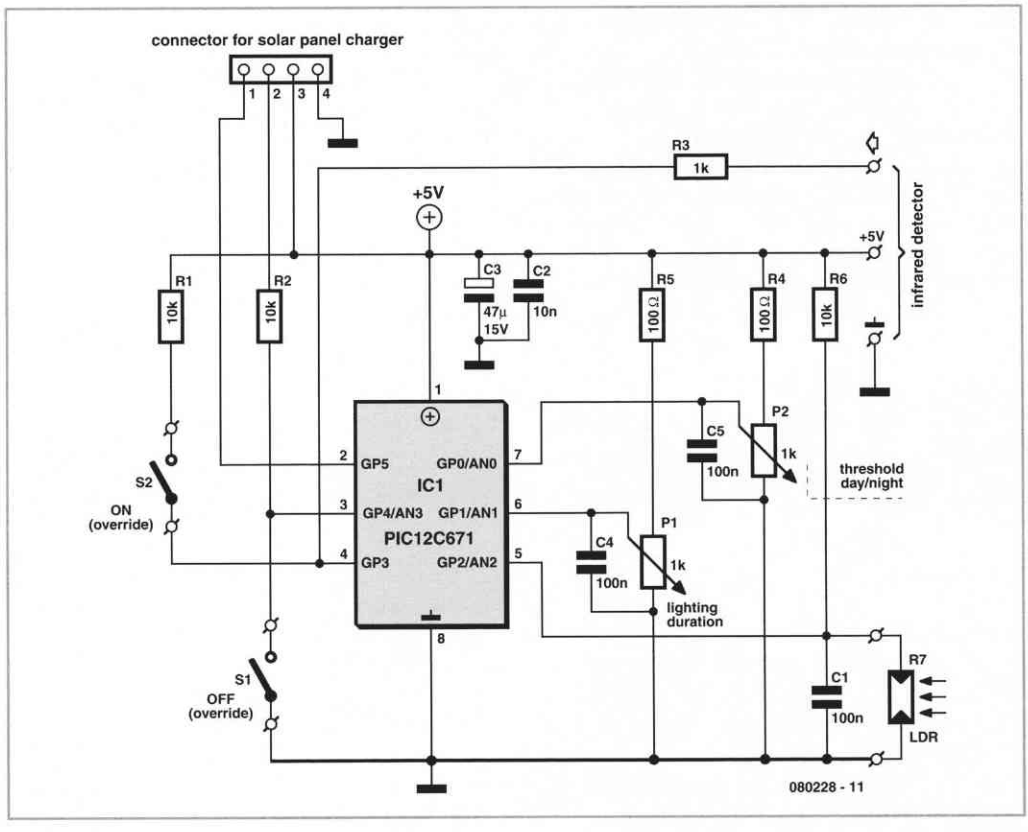

GP4 of the charger's 12C671, is fed to input GP4 of IC1 via pin 2 of the connector.

This same input also receives override (optional) switch S1, which makes it possible to force the lighting off. Input GP3 also receives a switch making it possible to force the lighting on all the time, for example, when you want to admire or show off your garden at night, by overriding the presence detector circuit.
The latter employs a ready-to-use offthe shelf module, since these days it's no longer worthwhile nor sensible to build such a unit from scratch. It's powered at 5 V and provides a logic high output when a presence is detected, which is connected to input GP3.

Watch out! Different modules of this type currently on the market exist with various supply voltages and generating high or low levels during detection. One module suitable for this application is available for example under reference PI8377 from Lextronic (*www.lextronic.fr*) where the author got it from. Some judicious online shopping may be in order to find a local equivalent.

The ambient light level is measured using an LDR connected to analogue input AN2, while adjustable potentiometers are connected to both inputs AN1 and AN0.

Preset P2 allows adjustment of the day/night threshold according to the characteristics and positioning of the LDR used, while P1 allows adjustment of the duration of the lighting following presence detection, from a few seconds to around ten minutes or so.

The program for the 12C671 PIC is of course available for free download from the Elektor website or from the author's own website: www.tavernier-c.com. The project works im-

mediately and only requires correct setting of P1 and P2 as indicated above.
Finally, it should be noted that that before it can be used with the automatic charger described elsewhere, the charger must first be adjusted on its own, as described in the relevant article. In other words, do not connect up the two projects as you will be struggling with an equation with at least two variables that may interact in unexpected ways.

www.tavernier-c.com (080228-I)

Web Links and Literature
PI8377 data sheet: *www.lextronic.note-bleue.com/~lextronic_doc/pi8377.pdf*
Application notes for Cubloc™ modules (in French only): *www.lextronic.fr/~lextronic_doc/Applications_B.pdf*

Downloads
The source code and .hex files for this project are available from www.elektor.com; file # 080228-1.zip.

131 Transcutaneous Electrical Nerve Stimulator (TENS)

MISCELLANEOUS ELECTRONICS AND DESIGN IDEAS

Klaus Rohwer

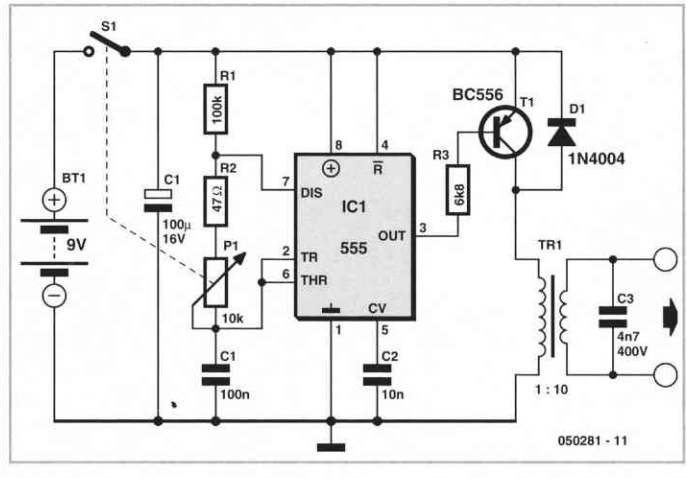

A Transcutaneous Electrical Nerve Stimulation (TENS) device is, put bluntly, a machine for giving electric shocks.

The author was prescribed such a device on loan by his orthopaedic specialist. The unit has a large number of programmes, of which he used only one. Measuring the signals at the output of the device in this mode revealed damped oscillations at a frequency of approximately 2.5 kHz, with a repetition rate of approximately 100 Hz. How hard can it be to make such a device ourselves?

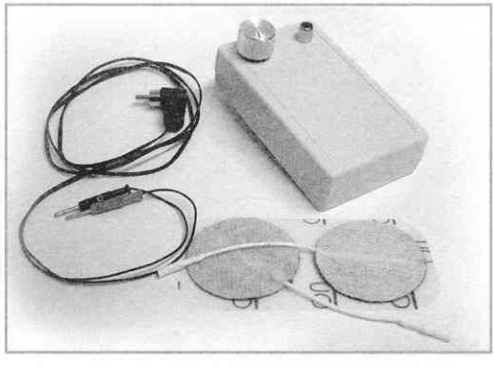

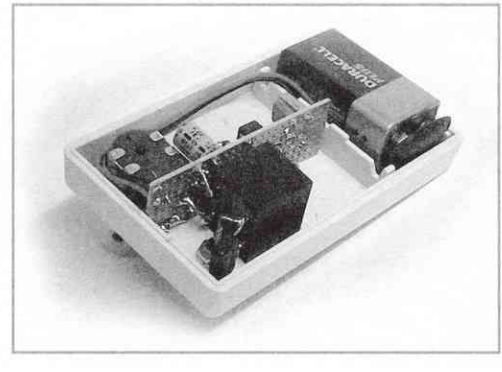

The simple circuit uses a CMOS 555 timer to produce a brief pulse which feeds a 1:10 miniature transformer. Together with a 4.7 nF capacitor the transformer makes a parallel resonant circuit: the resonance leads to a considerable increase in the output voltage.
The pulse width can be adjusted using a potentiometer, here shown combined with the on-off switch. Wider pulses produce higher output voltages. Since a peak voltage of up to 200 V can be produced, the transformer must have adequate insulation: Conrad Electronics type 516260-62 is suitable.
A low-cost phono socket at the output gives reliable connection to the electrode cable. The adhesive electrodes shown in the photograph (disposable and permanent types are available) can be obtained from pharmacies and medical suppliers. They generally have connectors compatible with 2 mm banana plugs, and so it is possible to make up the necessary cable yourself.
To treat responsive parts of the body, such as the arm, the potentiometer need not be turned up far to obtain the necessary sensation. Less sensitive parts, such as the knee or foot, need a rather higher voltage and hence a correspondingly higher potentiometer setting.
Anyone considering building a TENS unit with multiple (microprocessor-controlled) programmes might wish to read the article 'Low Impact Muscle Stimulator' in the April 2000 issue of *Elektor Electronics*.
The article is also available for purchase as a pdf file at *www.elektor.com*.

(050281)

Warning
No part of this circuit may be connected to the mains voltage, accidentally or intentionally, by means of any equipment or component including a transformer.

Disclaimer
This circuit is not approved for medical use and must not be used on young children or persons suffering from epilepsy. Medical advice should be sought from your GP before all use.

132 Environmentally-friendly Mosquito Repeller

HOME AND GARDEN

B. Broussas

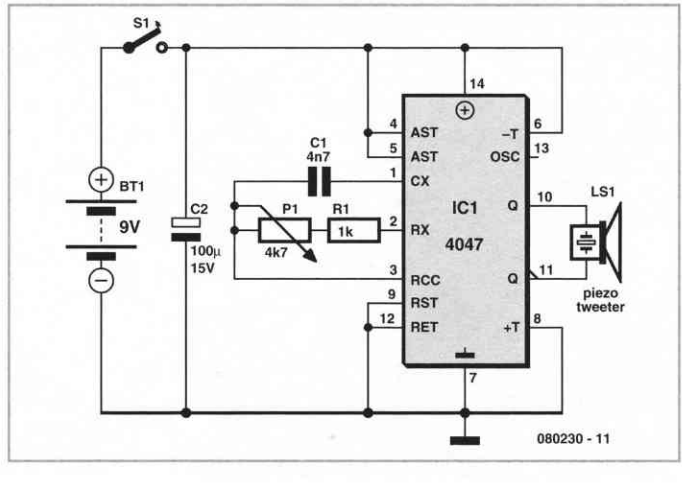

With the return of the fine weather, you'll doubtless be enjoying lazing around of an evening on your patio or in your garden, but even if you're not surrounded by marshes or other shallow water it's very likely some intruding mosquitoes will come along to spoil this idyllic scene.
Although indoors it's easy to get rid of them these days, indeed even to prevent them coming into the house, the same can't be said for the great outdoors. We might mention the well-known Chinese coils – the only thing Chinese about them is undoubtedly their name – which very

often drive people away as much as mosquitoes, if not more! Moreover they are nasty things to handle.
There are also UV (ultra-violet) 'electrocutors' consisting of a blue lamp surrounded by two closely-spaced grilles between which a high voltage is applied. The mosquitoes (and flies and other flying insects) are supposedly attracted by the colour of the lamp and as they approach, get electrocuted in contact with the two grilles. The only thing you have to do is pull out the drawer from time to time and get rid of the mass of dead insects.
Even though the effectiveness of these first two products remains questionable, it is less so than the one we're nonetheless going to describe here. We're talking about an ultrasonic mosquito repellent.
The principle, as described by its numerous promoters, is as follows. Only the female mosquitoes bite (that at least is an undisputed scientific fact) and they bite when they need to feed, and above all, to feed their eggs. In this situation, they seek to avoid the males whose 'job' has already been done, and so they fly away from the frequencies emitted by the males when they are on heat. This is where opinions now diverge. According to certain publications, the frequency emitted by the male mosquitoes is said to be around 20–25 kHz, and so within the realm of ultrasound. But according to others, it is in the region of 5–7 kHz instead; frequencies that a human ear, even an elderly one, can still hear very well.
Rather than spending lots of money (of the order of tens of pounds) buying such a device, which moreover generally have a fixed frequency, we're suggesting building one yourself so that you can carry out your own research this summer, especially since the circuit proposed is very simple and cheap to build.
As the figure shows, it uses just a single IC, a CMOS type 4047. This very multi-purpose IC can be wired in very many operating modes, including that of the multivibrator or astable used here. The operating frequency is set by the external components C1, R1, and P1; the latter makes it possible to slightly adjust the frequency, given the uncertainty that exists over the most effective value...
To best reproduce the high frequencies produced by the generator, the output transducer used is a simple tweeter, but it must be a piezo one. Such a tweeter behaves in fact much like a capacitor, and so doesn't overload the CMOS IC outputs that are incapable of supplying a substantial current, as everyone knows who's ever worked with 400 series CMOS logic.
To obtain an output signal of sufficient amplitude while being powered from a single 9 V battery, this tweeter is connected between the 4047's Q and $\overline{Q}$ outputs, making it possible to apply complementary (antiphase) signals to the tweeter so it 'sees' an alternating voltage of double the
supply voltage. In purely theoretical terms, this quadruples the output power available. In practice, it's better to regard it as tripling it, but the benefit achieved by doing it this way is nonetheless very real.
All that remains is for you to place the project in the middle of the patio table or beside your lounger in order to get a taste of the calm of a summer's evening without mosquitoes bothering you acoustically or worse, biting. At any rate, that's what we wish for you...

(080230-I)

133 Multi-colour Flashing LED

MISCELLANEOUS ELECTRONICS AND DESIGN IDEAS

Light effects have always been popular. Now that LEDs are available in all sorts of shapes, sizes and colours for reasonable prices, a whole gamut of possibilities has become feasible. Examples are case modding (embellishing PC cases with all kinds of lights,

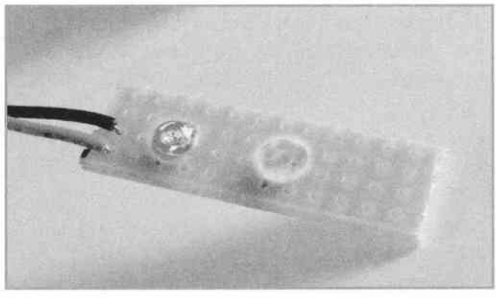

windows, etc.), adorning scooters, motorcycles and cars with various light ornaments, mood lighting in different colours and we could go on.

In Elektor Electronics we also regularly feature circuits with LEDs. One circuit flashes LEDs, another drives multicoloured LEDs. On one occasion standard logic (counters, shift registers, etc.) is used to drive the LEDs, on another occasion a microcontroller is used. But there are also solutions that do not require additional driving electronics.
Ordinary flashing LEDs that require no more than a series resistor have been around for donkey's ages. They are quite nice, but spectacular they are certainly not.

The company I.C. Engineering offers something much nicer: a three colour LED in a package with a diameter of 5 mm, which also contains all the control electronics. This 'LED' only requires a power supply voltage of 3 V to give a continuous 'light show'. The colours blend slowly from one to another. This effect is even nicer if the components are used next to each other. Because of small variations between LEDs, one LED will change colour a little faster than another, which results in a colourful play of lights. This 'LED' is eminently suitable to make a nice light ornament without too much effort.

(064014-1)

134 Microlight Fuel Gauge

TEST AND MEASUREMENT

Jean-Pierre Duval

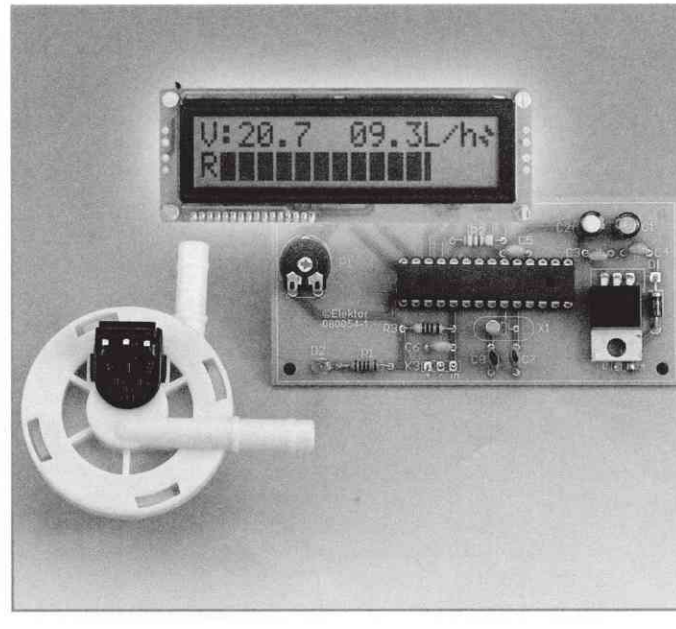

Over the Internet, a microlight owner asked me to make him a fuel gauge for his ultra light aircraft.
This seemed to me to offer various very interesting aspects, so I decided to take up the challenge.
I started by gathering some basic information to define the specifications that would be required for this measuring instrument, so vital for any craft moving in the third dimension where a good supply of fuel is absolutely vital to prevent accidents and embarrassment. Here are the key details:

- a microlight always takes off with the fuel tank full;
- fuel consumption is usually between 7 and 9 litres/hour;
- it's important for the gauge to be perfectly readable in all circumstances, e.g. in the form of a bargraph;
- an indication of the amount of fuel remaining, expressed in litres;
- an indication of the instantaneous fuel consumption (l/h);
- it must be possible to have complete confidence in the gauge, so provision needs to be made for a warning in the event of it going wrong;
- for the transducer, we use the manufacturer's data (in this case Digmesa); for greater safety, all data used are taken at minimum values;
- two alerts need to be provided: 3.5 litres and 2 litres of fuel reserve remaining.

All these conditions are taken into account by the firmware – the program burned into the microprocessor – more than by the hardware, which can thus remain relatively simple.

Apart from the fuel flow sensor, an Atmel ATmega8 microcontroller, and the display, all it takes is a few capacitors and a very small number of resistors.
Time now to take a look at the circuit. Let's start with the power supply.

Totally conventional, we start out with the 12 V supplied by the battery, dropped to 5 V by a 7805 regulator. Upstream of this, a fuse, not shown on the circuit, protects the whole unit. Diode D1 protects the regulator against unintentional polarity reversal of the voltage at the power supply input. LED D2 indicates the presence of the output supply rail from the regulator IC1.

1

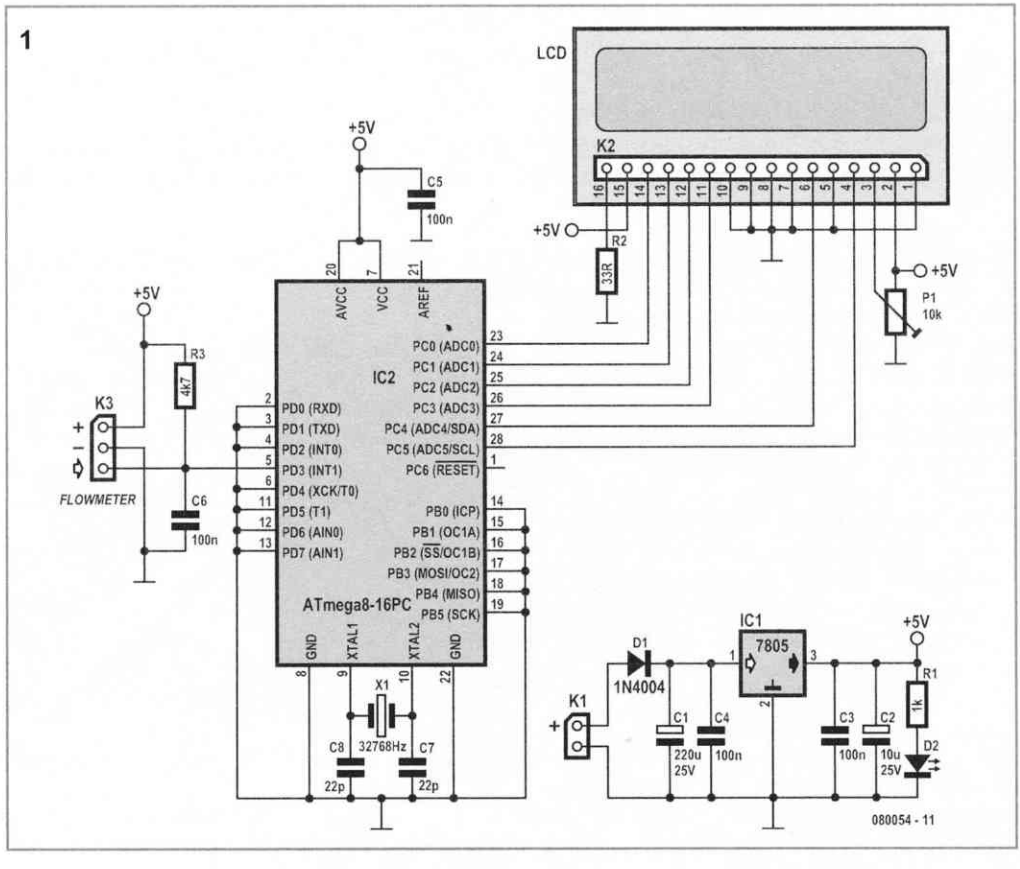

Now let's move on to the more interesting bit, which is the electronics of the virtual fuel gauge proper.

Leaving aside the microcontroller, the most important component in this project is the flow sensor. This is an FHKSC 932-8501 from Digmesa ([1] & [2]). This detector can measure fluid flows from 0.03 to 2.0 l/min, equivalent to a range of 1.8 to 120 l/hr — more than sufficient for the application envisaged. Originally developed for measuring water flow in coffee machines, it is equally capable of measuring other fluids, as long as they are not too chemically aggressive (alcohols, petrol, wines, etc.). The ability to set the sensor port connections at different angles gives it unquestionable installation flexibility.

After that, we are interested in the (artificial) heart of the circuit – now it's time to get down to the really clever stuff.

The microcontroller used here, IC2, is an ATmega8 from the Atmel stable [3]. We shouldn't underestimate it – despite its name, this is a powerful component that we are far from pushing to its limits. It uses its internal 8 MHz oscillator to run the program and an external 32.768 kHz clock crystal to measure the instantaneous consumption. The crystal frequency is common, by the way, from the use in watches where it's one on the easiest ways of creating a stable source for seconds pulses.
This ATmega8 microcontroller has 24 I/O ports, of which we are only going to be using a few, for the following functions:

- six ports are used for the LCD display, i.e. almost the whole of port C (PC0–PC5);
- one INT1 port (PD.3) as an input for the pulses supplied by the flow sensor;
- two ports, PB.6 and PB.7, are devoted to the above mentioned clock crystal.

For Reset we use the microcontroller 'Brown-out' programmed via the microcontroller 'fuses'. 'Brown-out' defines the supply voltage level at which the program starts – in our case the minimum voltage is 2.7 V.

The Reset pin has an internal pull-up, so no external one is needed.
BASCOM Basic includes the tools needed to configure the fuses.
All unused ports are configured in the program as inputs, and from an electrical point of view are tied to ground on the board.

The liquid flow sensor produces very clean 5 V (TTL) pulses which trigger an interrupt (INT1) used to measure the engine's fuel consumption. Here, it is wired in accordance with the manufacturer's data (see [1]), i.e. by adding a 4.7 kΩ pull-up resistor and a 100 nF capacitor between the signal output and ground (TTL-mode output).
Preset P1 allows adjustment of the LCD display contrast by adjusting the voltage V_{EE}.

The program is written in BASCOM BASIC, a powerful, economical programming language that's all the same very easy to implement. There is a free version available that is capable of producing up to 4 k of code [4].

The irreproachable operation of this fuel gauge relies on a plethora of arithmetic calculations going on inside the microcontroller. We'll describe the most important ones so that if necessary you can adapt the characteristics of this flowmeter so as to use it for other applications.

Let's suppose that our fuel tank has a capacity of 29 litres. If we assume that the sensor provides 1,800 pulses per litre (we measured over ten tanks and were at between 1,900 and 2,000 pulses per litre – in accordance with the manufacturer's data, but reduced down to 1,800); that gives us a maximum of $1{,}800 \times 29 = 52{,}200$ pulses for a completely full tank; in order to maintain a degree of safety margin (poorly-filled tank, leaks, and so on) we'll give ourselves a margin of 10%, and so will only count 48,000 pulses. Each pulse corresponds to 1,000 /1,800, i.e. 0.555 ml.

The calculation of the instantaneous consumption expressed in litres/hour is a weighted value, recalculated every 10 seconds.

Procedure for calculating volume of fuel remaining:

Once again, the calculation is extremely simple :

If, at the outset, volume=48000

```
------interrupt routine------
rem at each interrupt, the volume is
    decremented
DECR volume
------display------
rem after a formatting step
volume_remaining=volume
Tank = Str(volumeremaining)
Tank = Format(tank , "00.0")
Locate 1 , 1 : Lcd "V:" ; Tank
```

The TIMER interrupt is used here in the Clock configuration to generate a very precise second value, so even with very low consumptions, the response is very close to the true value. The calculation of the volume remaining in the tank is performed by decrementing the amount consumed per unit of time from the volume remaining (see inset 'Procedure for calculating volume of fuel remaining').

All that remains to mention is the alert thresholds, at 3.5 and 2 litres, defined in the firmware.
Again, if you want to adapt thee values to your personal requirements, do feel free to edit the microcontroller source code.

These calculations refer to the amount remaining; when one of the thresholds is reached, it causes the LCD display to blink at a fast rate.

One of the most interesting aspects of this project is the very customized way the display is used. It's worth taking a slightly closer look at it.
Some display tricks are used to display the values. The top line of our display (two lines of 16 characters) is used to show the numeric information about the volume remaining (V) and instantaneous consumption (l/h).
The character at the extreme right of this top line is a user defined character intended to symbolize the flowmeter. As long as the latter is working, this character changes shape, giving the impression of rotation. This is what we've called the 'operation indicator'.
In the measuring second, we make it change between two characters symbolizing the flowmeter. If the flowmeter isn't working, there is no variation in volume during the measuring period, and so this right-hand end character remains static.

Let's see now what the bottom line does. It's used to indicate the tank status in graphical form. When it is full, we will have 15 solid blocks to the right of the R (for 'Reservoir' = Tank).
The characters on the LCD display are each made up of an 8 row by 5 column matrix of pixels. To be able to display the gradual reduction in the amount of fuel available, we have created several special user characters.

COMPONENTS LIST

Resistors
R1 = 1 kΩ
R2 = 33 Ω
R3 = 4kΩ7
P1 = 10 kΩ preset

Capacitors
C1 = 220 µF 25V
C2 = 10 µF 25V
C3–C6 = 100 nF
C7, C8 = 22 pF

Semiconductors
D1 = 1N4004
D2 = LED, red
IC1 = 7805
IC2 = ATMEGA8, programmed with hex file from archive 080054-11.zip

Miscellaneous
X1 = 32.768 kHz quartz crystal
K1 = 2-way pinheader
K2 = 16-way SIL pinheader
K3 = 3-way pinheader
LCD, 2x16 characters with backlight, general purpose
F1 = flow meter, Digmesa type FHKSC 932-8501 (Conrad Electronics)
PCB, ref. 080054-1 from *www.thepcbshop.com*

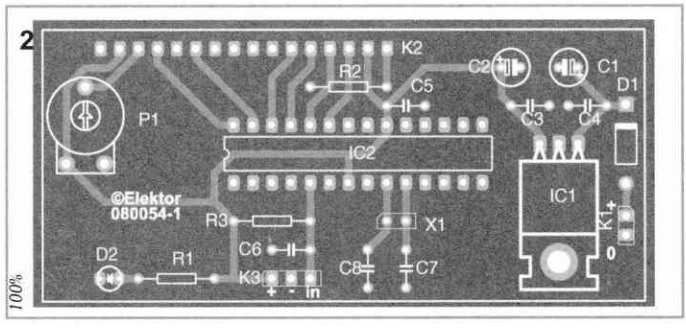

The solid block of 5 columns is part of the LCD display's own character set. We're going to create a block with just 4 columns, then one with 3, then 2, and then 1. After that, the block in question just goes blank. Let's move on now to the calculations.

We have 15 characters, each with 5 columns, giving us 80 columns in all.

We have taken 48,000 as our starting point (allowing for our safety margin). Hence by division, 48,000/80 = 600. So, we can see that we need to lose one column every 600 pulses. So we display the appropriate number and type of characters corresponding to the information to be displayed. In the photo of the display, the last character consists of two columns.

A printed circuit board was designed for this project. It's approximately the same size as the display, which can be mounted onto the board piggyback-fashion. The component layout needs no special mention. You should start with the smaller components, resistors, capacitors, headers, and diodes, finishing off with the socket for IC2. Don't fit the processor into its socket until you have first checked that the required voltage (5 V) is present on the relevant pins (7, 20, referenced to one of the pins connected to earth, 2, 3 etc. Refer to the circuit diagram).

It only remains to fit the flow sensor into the fluid (whatever it is) supply pipe. Header K3 is used for its supply and output signal. The LCD display connects to header K2. Take care to get it the right way round!

We're very curious to know what applications readers are going to find for the virtual gauge described here!

jeanpierre.duval2@orange.fr (080054-I)

Downloads

The source code and .hex files for this project, along with the board design are available on *www.elektor.com*. The respective file names are 080054-11.zip and 080054-1.zip.

Web Links

[1] Flow sensor source
www.digmesa.com/
[2] Flow sensor data sheet
www.digmesa.com/digmesa/upload/pdf/FHKSC/932-850xxxx_GB.pdf
[3] ATmega8 data sheet
www.atmel.com/dyn/resources/prod_documents/doc2486.pdf
[4] BASCOM BASIC (MCS)
www.mcselec.com/index.php?option=com_docman&task=cat_view&gid=99&Itemid=54

135 Thunderstorm Predictor

HOME AND GARDEN

Karel Walraven

Sure, listening to VHF FM has great advantages over MW/LW AM from the old days – now we have bright stereo free from interference, fading and noise! However, your FM radio will no longer predict the arrival of a thunderstorm as did the AM radio many years ago – reliably and hours before the trouble was upon you! The crux is that AM detection

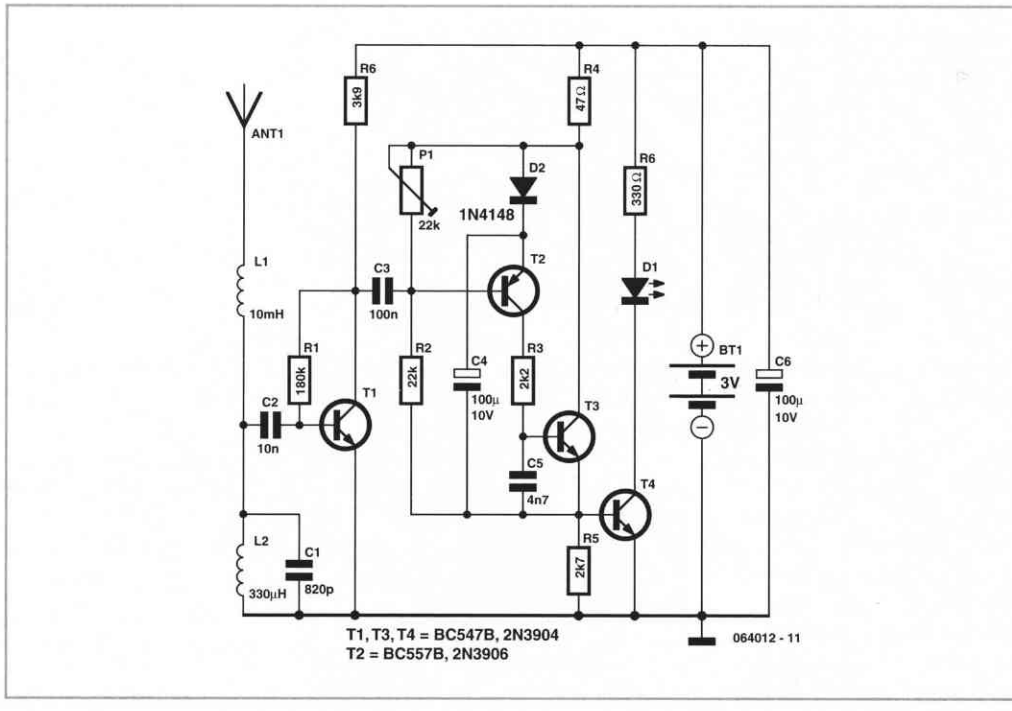

will faithfully reproduce the effects of lightning and other massive static discharges approaching in a very simple way: they're audible as slight crackling noises in the loudspeaker, almost irrespective of the tuning of the radio!

Assuming no AM radio is available anymore, a dedicated VLF receiver tuned to about 300 kHz can faithfully detect the crackle of approaching lightning. The simple receiver shown here consists of a loosely tuned amplifier driving a kind of flasher circuit that blinks an LED in synchronicity with the lightning bolts. The frequency and intensity of the LED activity indicates the intensity and distance of the storm respectively.

Looking at the circuit diagram, the LED driver is not biased to flash until a burst of RF energy, amplified by T1, arrives at the base of T2.
The receiver works off 3 volts and has a negligible standby current of about 350 microamperes which will hardly dent the shelf life of a couple of 1.5-V D-size cells.

T2 and T3 form a monostable generator triggered by sudden drops in T1's collector voltage. Preset P1 is adjusted until the LED remains off when you're sure there's no thunderstorm around for a few hundred miles. The value of the LED series resistor is subject to experimentation and LED current.
L2, C1 and the antenna are coarsely tuned for resonance at about 300 kHz. Frequency-wise, lightning is a fairly broadband phenomenon so any tuning to between 200 and 400 kHz will be fine for the circuit but make sure you're not accidentally tuned to a nearby VLF transmitter!
The input signal is obtained from a 70-cm long piece of stiff wire, with coil L1 inserted for impedance matching and lengthening the antenna electrically.

(064012-1)

Warning
This circuit and in particular the antenna must not be used to attract lightning. Consequently, neither the circuit nor the antenna may be used outdoors and/or powered from the mains.

136 Turbo BDM Lite ColdFire Interface

Luc Lemmens

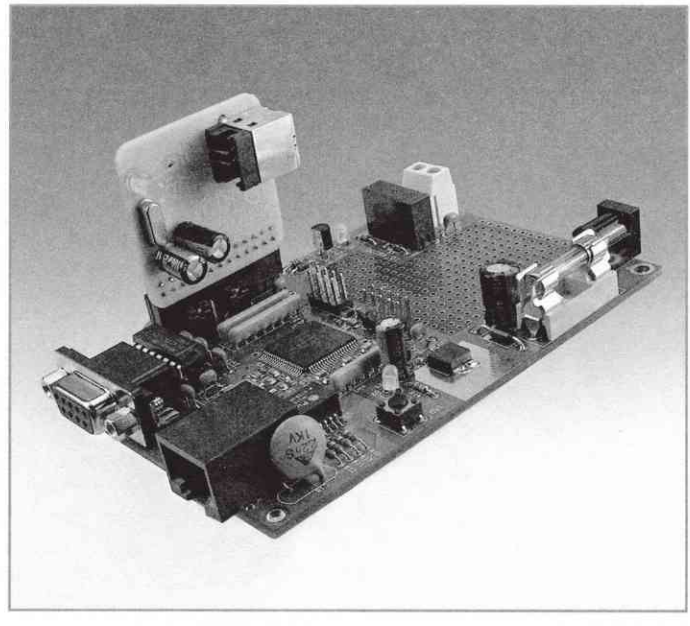

In the April and May 2008 issues of *Elektor* the DigiButler was introduced, which is a simple, low-cost Home Automation Server built around the MCP52231, a ColdFire microcontroller made by Freescale. The two article instalments also mentioned Daniel Malik's Turbo BDM Lite ColdFire interface (TBLCF), a low-cost programming interface that is fully open source.

Although we referred to the extensive TBLCF documentation, we didn't have enough time during the preparations of the DigiButler project to fully test this interface, and there wasn't an RoHS compliant replacement for the microcontroller in that circuit. This is now available, however, and may be obtained as a free sample via the Freescale website.

The software and firmware for the TBLCF can be found via the link at the end of this article, and **tblcf_v10.zip** is the file that we need. This can also be found as part of the free download (071102-11.zip) that we've added to the Elektor website. The .zip file contains a manual (**manual_v14.pdf**), which clearly explains how the drivers should be installed and how the controller for the interface should be programmed. It's just a matter of figuring out where the various files are stored.

The USB drivers (page 13 of the manual) are contained in **usb_drivers_v10.zip**. Extract all the files from this .zip file into a new folder on the hard drive. You can then connect the interface to the PC, which should result in a message stating that a new hardware device has been found. If that doesn't happen it's a case of carefully checking all soldering on the TBLCF board.

Note that the LED on the interface won't turn on yet at this stage. Next, follow the instructions given in the manual to install the drivers.

To program the firmware you need the files **tblcf_bt.exe** and **tblcf.abs.s19**. These can be found inside **pc_binaries_v10.zip** and **tblcf_firmware_v04.zip\bin** respectively. When the programming of the firmware has been completed Windows will start another procedure to install the new drivers, after which the PC has to be restarted.

Once this has been done the LED on the TBLCF should be lit continuously if it has been correctly recognised by Windows. Whenever communications take place between the PC and the target system the LED flashes.

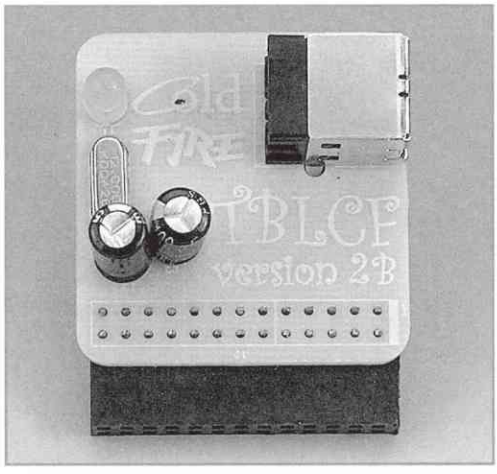

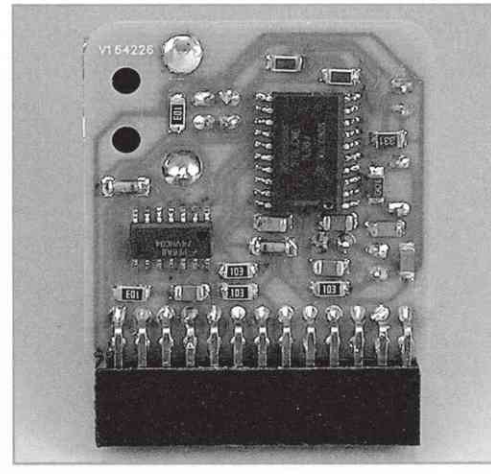

Adding the TBLCF to the CodeWarrior 6.3 IDE is clearly explained in the manual, and **tblcf_gdi.dll** can be found inside **pc_binaries_v10.zip**. The item 'Startup file' can be left blank.

Up to this point the manual has held our hand through the installation process, but there is (as with the parallel programmer interface from the May issue) a section that requires extra attention: the settings for the flash programmer. From CodeWarrior, open the menu *Tools → Flash Programmer*. Click on *Load Settings* and load the file **setup.xml**, which can be found in the folder **DigiButler software\SW_Main_Board** (archive 071102-11.zip). Check that the *Target Processor* in this window is set to: *5223x*. For the *Connection* choose TBLCF and make sure that the *target initialisation file* is **M52235EVB_PnE.cfg**. Then click on *Flash Configuration* and from the *Device* table select the **CFM_MCF5220_25MHz**. Then overwrite **setup.xml** using *Save Settings* to keep the new settings.

(080448-I)

Web Link
http://forums.freescale.com/freescale/board/message?board.id=CFCOMM&thread.id=624

137 Phono Splitter

AUDIO, VIDEO AND PHOTOGRAPHY

Marcel van de Gevel

This circuit is intended to send the signal from a record player with a magnetodynamic (MD) element to two different RIAA-amplifiers without creating any problems with ground loops. A kind of distribution amplifier for phono signals, in other words.

The circuit was originally designed by a local VHF FM broadcast station called 'Haarlem 105'. For the golden-oldies programme, the signals from two record players had to be sent to a large radio mixing panel (which is also the entry point for jingles and presenter microphones). For a programme with modern dance music the signals had to be routed to a small club mixing panel that was positioned between the two record players.

Connecting in parallel was not an option, because it will create a ground loop and the load

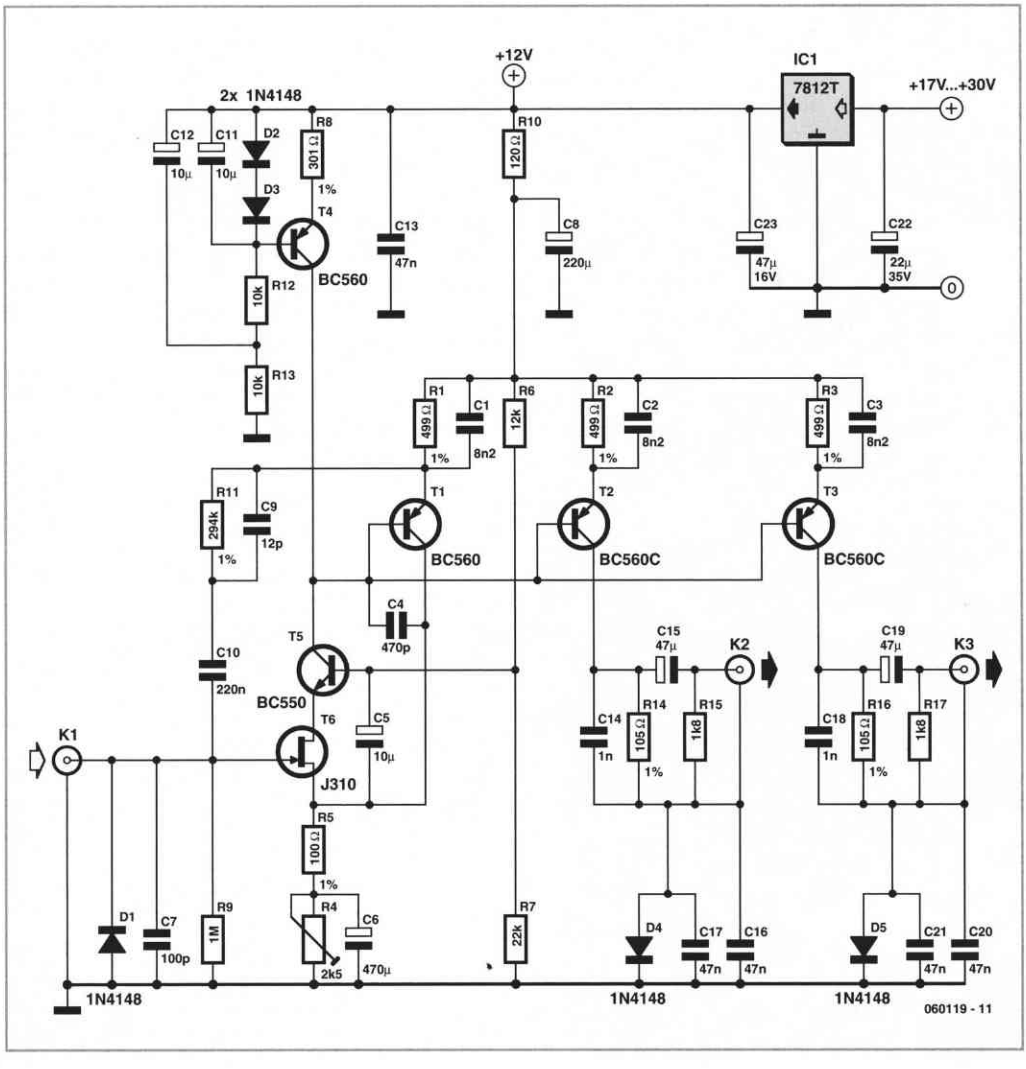

for the element will be wrong. An RIAA amplifier for each player was not possible either because all the line inputs of the small club mixing panel were already in use. Switching between them was also not desirable; another switch that can be in the wrong position...

The circuit works as follows. The feedback ensures that the signal voltage of the element will be across R5. The signal current that results from this, runs through T1 and, because the bases are tied together, also through T2 and T3. This causes a signal voltage across R14 and R16. By connecting one side of R14 or R16 to the local ground of the mixing panel, the signal voltage will be between the input and the local ground of the mixing panel. This connection to the local ground of the mixing panel is done via the screens of the phono plugs. The part of the chassis at the output must definitely be isolated.

D4 and D5 operate like a kind of automatic ground lift switch. It is the intention that the ground from the distribution amplifier is connected in one way or another to the ground of the mixing panels, obviously without creating a ground loop. The DC from T2 and T3 flows via the screens of the phono cables and

the ground connection back to the distribution amplifier. There is hardly any DC voltage across D4 and D5, so that they do not conduct. As a result the outputs for the signal voltages are well isolated from each other, which reduces the risk of a ground loop.

If there is no connection between the ground of the distribution amplifier and the grounds of the mixing panels then D4 and D5 will conduct. Everything continues to function, but there is a relatively low-impedance connection between the screen of X2 and the screen of X3 via the diode, which can cause a weak ground loop if the grounds of the mixing panels are also connected together via another path.

An input impedance of 47 k is absolutely essential to properly terminate an MD-element. This is realised in this amplifier with feedback via R11. This results in lower input noise compared to simply soldering a 47-kΩ resistor in parallel with the input. Trimpot R4 is required because of the wide tolerance of field effect transistor T6. Adjust R4 so that there is about 1 V across R1. If R4 is a carbon trimpot, then the wiper has to be connected to the positive side (as indicated in the schematic) to prevent anodisation of the wiper.
The distribution amplifier has four identical channels, enough for two stereo record players and is powered from one 7812, which does not need a heatsink.

(060119-1)

138 Detector with Amplification

RF (RADIO)

Burkhard Kainka

A simple shortwave radio detector is neither very sensitive nor very selective. However, with a little extra amplification we can improve the reception performance significantly.

The additional circuit is designed to compensate for the losses in the resonant circuit. A transistor is used to amplify the RF signal and feed it back into the resonant circuit. When the gain is set correctly we can make the amount of this feedback exactly equal to the losses. The resonant circuit is then critically damped and has a very high Q factor. Now we can separate transmissions that are just 10 kHz apart, and we can tune in to very weak stations.

The tuning capacitor used has two gangs of vanes with capacitances of 240 pF and 80 pF. These two gangs are connected in parallel to

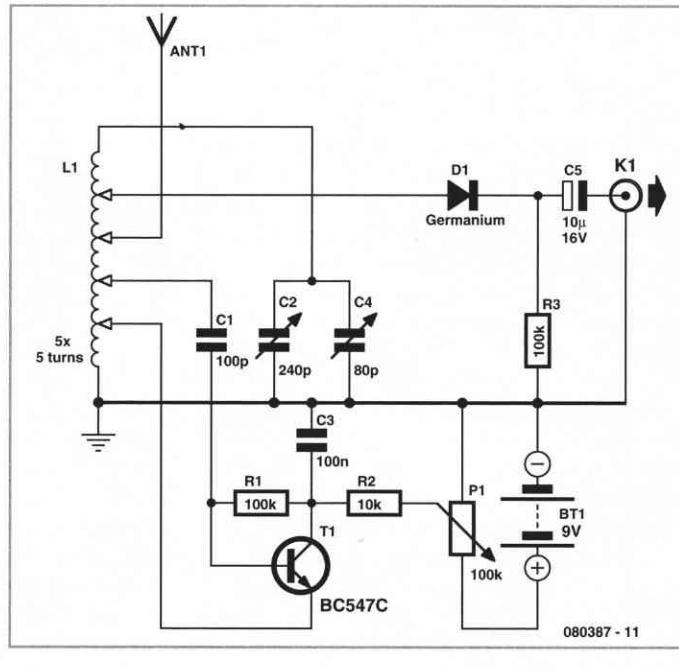

make a 320 pF variable capacitance. The air-cored inductor has 25 turns on a diameter of 10 mm, with taps at 5-turn intervals. The resonant circuit so formed is capable of covering the full shortwave band from 5 MHz to 25 MHz.

The shortwave detector can be connected to a power amplifier, or, for example, amplified PC loudspeakers. The antenna does not have to be very long: in experiments we used a one-metre length of wire. Tuning the radio involves adjusting the variable capacitor to bring in the station and then adjusting the gain of the feedback circuit for optimal output volume. If the potentiometer is turned up too far, the receiver will go into self-oscillation and become a mini-transmitter. At the optimal setting the sound quality is very pleasant and certainly no worse than many ordinary shortwave radios.

If you find shortwave detectors that use a battery and an amplifier a little new-fangled, you can get your fix of nostalgia by dispensing with the battery and connecting a crystal earpiece to the detector's output. The radio will of course also work without the feedback circuit, but with rather poorer performance.

(080387-I)

139 10,000x with One Transistor

MISCELLANEOUS ELECTRONICS AND DESIGN IDEAS

Gert Baars

For a collector follower with emitter resistor, you'll often find that the gain per stage is no more than 10 to 50 times. The gain increases when the emitter resistor is omitted. Unfortunately, the distortion also increases.

With a ubiquitous transistor such as the BC547B, the gain of the transistor is roughly equal to 40 times the collector current (I_C), provided the collector current is less than a few milliamps. This value is in theory equal to the expression q/KT, where q is the charge of the electron, K is Boltzmann's constant and T is the temperature in Kelvin. For simplicity, and assuming room temperature, we round this value to 40.

For a single stage amplifier circuit with grounded emitter it holds that the gain U_{out}/U_{in} (for AC voltage) is in theory equal to $S \cdot R_c$. As we observed before, the slope S is about $40 \cdot I_c$. From this follows that the gain is approximately equal to $40 \cdot I_c \cdot Rc$.

What does this mean? In the first instance this leads to a very practical rule of thumb:

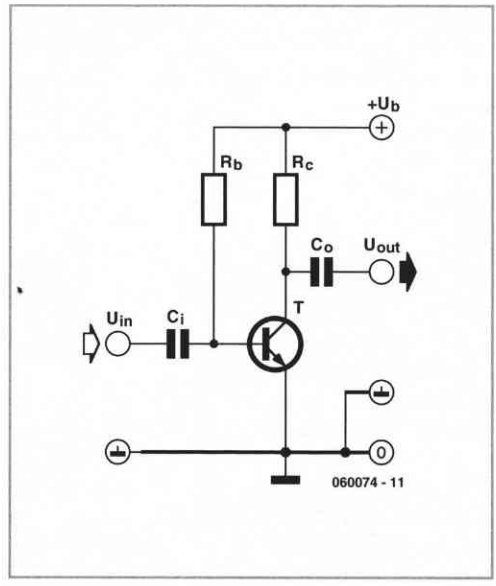

that gain of a grounded emitter circuit amounts to $40 \cdot I_c \cdot Rc$, which is equal to 40 times the voltage across the collector resistor. If U_b is, for example, equal to 12 V and the collector is set to 5 V, then we know, irrespective of the values of the resistors that the gain will be about $40 \times (12 - 5) = 280$.

Notable is the fact that in this way the gain can be very high in theory, by selecting a high power supply voltage. Such a voltage could be obtained from an isolating transformer from the mains. An isolating transformer can be made by connecting the secondaries of two transformers together, which results in a galvanically isolated mains voltage. That means, that with a mains voltage of 240 V_{eff} there will be about 340 V_{DC} after rectification and filtering. If in the amplifier circuit the power supply voltage is now 340 V and the collector voltage is 2 V, then the gain is in theory equal to 40 × (340 – 2). This is more than 13,500 times!

However, there are a few drawbacks in practice. This is related to the output characteristic of the transistor. In practice, it turns out that the transistor does actually have an output resistor between collector and emitter. This output resistance exists as a transistor parameter and is called 'h_{oe}'.

In normal designs this parameter is of no consequence because it has no noticeable effect if the collector resistor is not large. When powering the amplifier from 340 V and setting the collector current to 1 mA, the collector resistor will have a value of 338 kΩ. Whether the 'h_{oe}'-parameter has any influence depends in the type of transistor.

We also note that with such high gains, the base-collector capacitance in particular will start to play a role. As a consequence the input frequency may not be too high. For a higher bandwidth we will have to use a transistor with small C_{bc}, such as a BF494 or perhaps even an SHF transistor such as a BFR91A. We will have to adjust the value of the base resistor to the new h_{fe}.

The author has carried out measurements with a BC547B at a power supply voltage of 30 V. A value of 2 V was chosen for the collector voltage.

Measurements confirm the rule of thumb. The gain was more than 1,000 times and the effects of 'h_{oe}' and the base-collector capacitance were not noticeable because of the now much smaller collector resistor.

(060074-1)

140 LED Spinning Top

HOBBY AND MODELLING

Volker Ludwig DD0EU

Commercially available plastic LED spinning tops consist of one or more LEDs powered from two button cells and activated using a switch actuated by centrifugal force. More elaborate devices, according to the author's research, also include a microcontroller to provide an ever-changing light display.

It is entirely unacceptable, on both pedagogical and environmental grounds, that it is almost always impossible to replace the batteries without damaging the top.
This gives us motivation enough to build or own version.

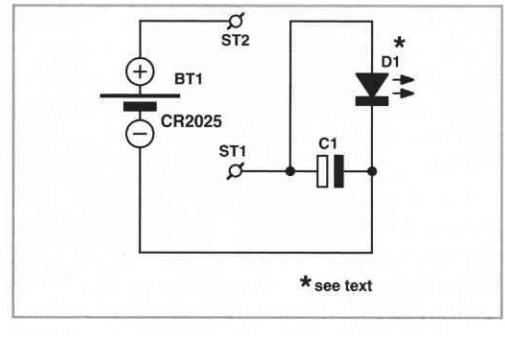

First of all a few craft skills are called for to turn up a wooden top on the lathe. If you feel slightly unwell at the thought of showing off your woodworking skills to your children,

then the author (e-mail *email@dd0eu.de*) is willing to help you out by supplying ready-made tops like the one illustrated here which, thanks to their long handle, spin very satisfyingly.

The circuit employs very few components and there is not a microcontroller in sight. The magic is down to the use of a high-brightness so-called 'rainbow LED' as mass produced for use in continuouslychanging coloured 'mood' lights intended for domestic lighting applications. This device includes not only an RGB LED but also a control chip that causes it to change from colour to colour.

Normally this colour changing is too slow to make a pretty effect when the LED is mounted on a spinning top. However, there is an interesting effect that occurs when using these slowly changing LEDs as the smooth colour transitions are produced using pulse width modulation. When the top is spun quickly the pulses of light give an attractive visual effect, as the author's photograph shows.

The circuit is very simple, with the main components being just the colour-changing LED and a 3 V button cell. It is important not to forget the centrifugal force switch, as otherwise the recipient of the toy may be rather disappointed to discover that the battery is flat!

In order to simplify construction still further, the author has designed a printed circuit board for the project. Once the board is populated the central hole provided can be used to locate it correctly over the handle of the top. The printed circuit board layout is available for download from www.elektor.com.

So that the top can be balanced correctly when construction is complete, it is important that it has no loose parts.

The two terminal pins ST1 and ST2 form the contacts for the centrifugal force switch. A sprung contact can be improvised by soldering one end of a spring salvaged from an old ballpoint pen (you may need to try more than one to find one that works) to one of the pins and a length of tinned copper wire to the other end of the spring. The wire and the other pin then form the switch contacts, which are closed when the top is spun (see the photograph).

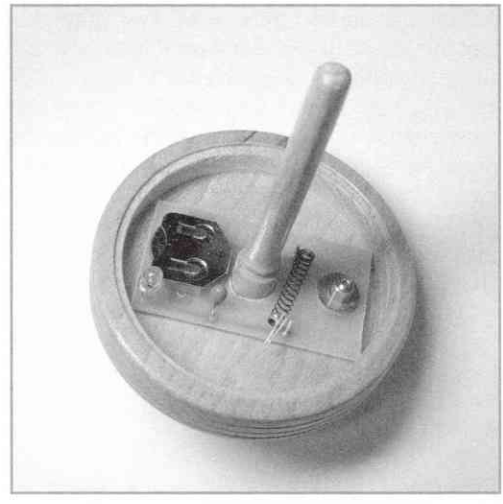

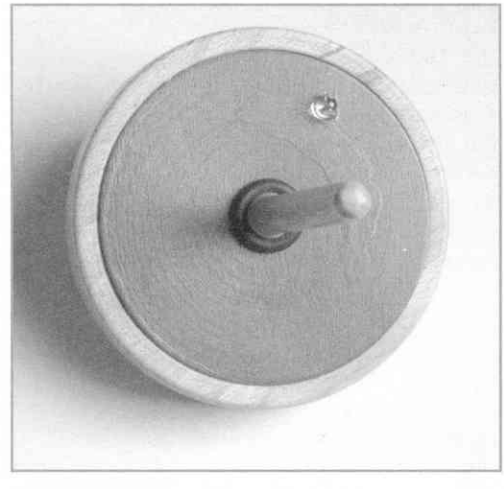

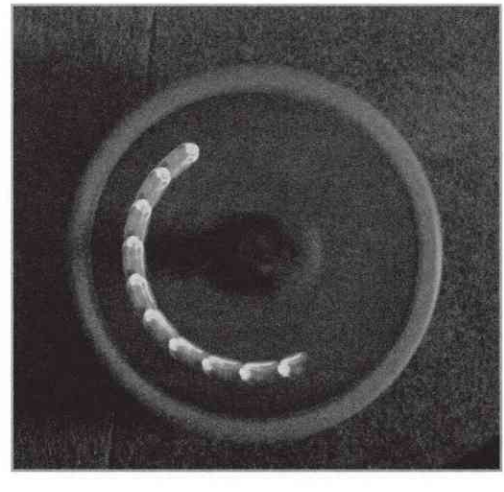

Things should be arranged so that there is a gap of about 1 mm between wire and pin when the top is stationary.
The bottom contact pad for the button cell can be made by soldering a small drawing pin in the middle of the battery holder area.

The counterweight is made from an M3× 10 screw with nut and a 4 mm washer, which allows for a little adjustment to be made.
If more weight proves necessary, further washers or nuts can be added.

(070916-I)

141 New KW1281 Interface

HOBBY AND MODELLING

Florian Schäffer

Cars made by the Volkswagen/Audi group (VAG) are easy to interface to using the OBD-2 connector: the VAGCOM software allows values to be read out from the car and parameters to be set.

The communications protocol used is called KW 1281. Versions of VAGCOM up to 311 require the use of an isolated interface connected to the PC's serial port to protect both the car's computer systems and the PC itself from possible damage.

A popular and rather minimal design for the circuit is 'Jeff's interface'; however, this employs optocouplers which are not always readily available from electronic component shops.

Also, the optocouplers are run at a rather infelicitous operating point, entailing the use of several trimmer potentiometers and correspondingly complicated adjustments. The problem can be solved with the use of

1

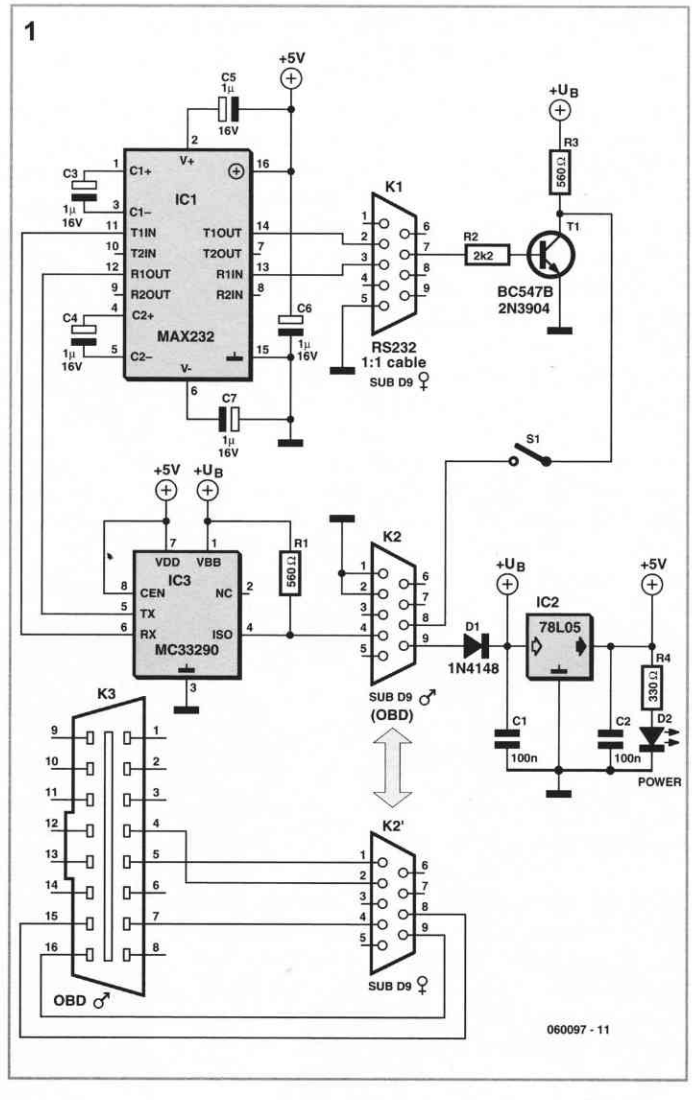

two interesting ICs: the L9637D from ST Microelectronics and the Motorola/Freescale MC33290D. Both include an ISO 9141-compliant interface. The L9637D, at a price of two pounds or so, is the more expensive, but can withstand voltages of up to 36 V, making it suitable for use with commercial vehicles that use a 24 V supply. At 58 kbit/s it is also too slow to connect to the CAN bus, which can operate at up to 500 kbit/s. The MC33290D is only specified for operation up to 18 V, but is fast enough for OBD over CAN and is therefore the better choice for our circuit. As far as VAG-COM is concerned the difference is not significant, as KW 1281 operates at a maximum speed of just 10400 bit/s.

This chip is responsible for the OBD side of the circuit; on the serial port side we use a MAX232. The MAX232 converts the serial signals between the levels used on the interface and TTL levels, while the MC33290 converts between TTL levels and the ISO levels. The circuit draws power from the car's 12 V supply over the OBD cable. A simple voltage regulator produces the +5 V supply voltage, whose presence is indicated by the LED. To ensure that the circuit remains compatible with older cars, separate provision must be made for connection to the L-line as the ISO interface chip only supports the K-line. We have therefore added a transistor to drive the L-line: the direction of data transfer on this line is only from the PC to the car. Most cars use only the K-line and do not require the L-line at all.

We have therefore also added a switch to allow the signal to be isolate from the OBD connector. This allows testing of whether the car uses the L-line for initialisation or not. A straight-through (not a crossed-over null modem) cable is used to connect to the PC.

The components are readily available; the ISO interface chip can be obtained from Farnell or Segor Electronics. No adjustments are required to the circuit, since all the devices used are standardscompliant. The author has made a printed circuit board layout available on his homepage, as both an Eagle file and a PDF. The page also contains much other information, including details of the software.

(060097-1)

Internet Link
www.blafusel.de

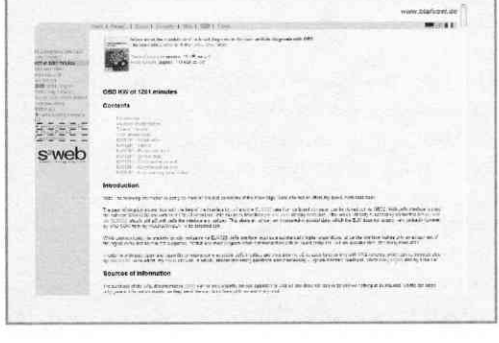

142 Video Isolator

AUDIO, VIDEO AND PHOTOGRAPHY

Harry Baggen

These days many more audio-visual devices in the home are connected together. This is especially the case with the TV, which may be connected to a DVD player, a hard disk recorder, a surround-sound receiver and often a PC as well. This often creates a problem when earth loops are created in the shielding of the video cables, which may cause hum and other interference.

The surround-sound receiver contains a tuner that takes its signal from a central aerial distribution system. The TV is also connected to this and it's highly likely that the PC has a TV-card, which again is connected to the same system. On top of this, there are many analo-

gue connections between these devices, such as audio cables. The usual result of this is that there will be a hum in the audio installation, but in some cases you may also see interference on the TV screen.

The ground loop problem can be overcome by galvanically isolating the video connections, for example at the aerial inputs of the surround-sound receiver and the TV. Special adaptors or filters are sold for this purpose, known as video ground loop isolators.

Good news: such a filter can also be easily made at home by yourself. There are two ways in which you can create galvanic isolation in a TV cable. The first is to use an isolating transformer with two separate windings. The other is to use two coupling capacitors in series with the cable. The latter method is easily the simplest to implement and generally works well enough in practice.

The simplest way to produce such a 'filter' is as an in-line adapter, so you can just plug it onto either end of a TV aerial cable. The only requirements are a male and female coax plug and two capacitors. The latter have to be suitable for high-frequency applications, such as ceramic or MKT types. It is furthermore advisable to choose types rated for high voltages (400 V), since the voltages across these capacitors can be higher than you might expect. (A PC that isn't connected to the mains Earth can have a voltage as high as 115 V (but at a very low, safe current), caused by the filter capacitors in its power supply. These capacitors don't need to be high value ones, since they only have to pass through frequencies above

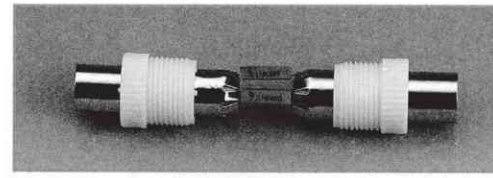

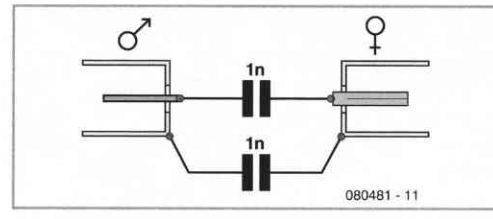

about 50 MHz. Values of 1 nF or 2.2 nF are therefore sufficient.

To make the isolator you should connect one capacitor between the two earth connections of the coax plugs and the other between the two signal connections. The mechanical construction has to be sturdy enough such that the connections to the capacitors won't break whenever the inline adapter is removed forcibly. A good way to do this is to make a cover from a piece of PVC piping for the central part. Wrap aluminium foil round the outside and connect it to one of the plugs, so that the internal parts are properly shielded from external interference. Make sure that the aluminium foil doesn't make contact with the other plug, otherwise you lose the isolation.

The majority of earth loops will disappear when you connect these filters to all used outputs of the central aerial distribution system where the signal enters the house.

(080481-I)

143 Power MOSFET Bridge Rectifier

POWER SUPPLIES, BATTERIES AND CHARGERS

Wolfgang Schubert

The losses in a bridge rectifier can easily become significant when low voltages are being rectified. The voltage drop across the bridge is a good 1.5 V, which is a hefty 25% with an input voltage of 6 V. The loss can be reduced by around 50% by using Schottky diodes, but

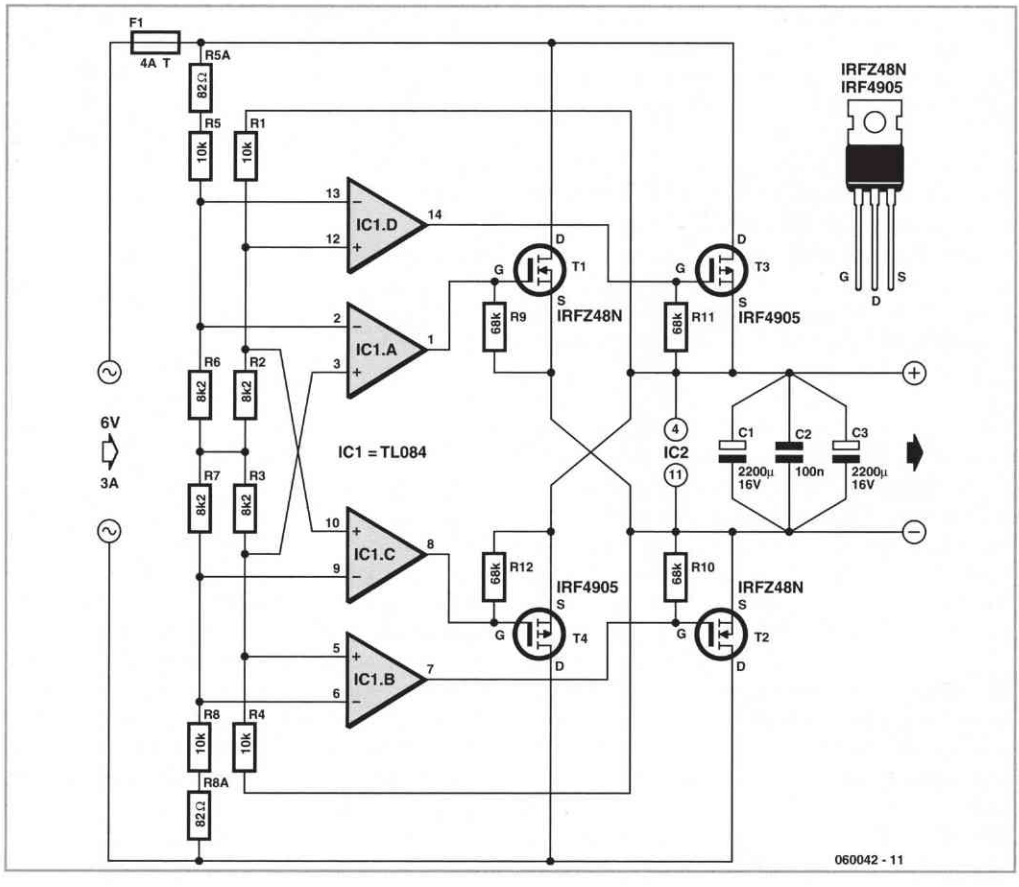

it would naturally be even nicer to reduce it to practically zero. That's possible with a synchronous rectifier. What that means is using an active switching system instead of a 'passive' bridge rectifier.

The principle is simple: whenever the instantaneous value of the input AC voltage is greater than the rectified output voltage, a MOSFET is switched on to allow current to flow from the input to the output. As we want to have a full-wave rectifier, we need four FETs instead of four diodes, just as in a bridge rectifier.

R1–R4 form a voltage divider for the rectified voltage, and R5–R8 do the same for the AC input voltage. As soon as the input voltage is a bit higher than the rectified voltage, IC1d switches on MOSFET T3. Just as in a normal bridge rectifier, the MOSFET diagonally opposite T3 must also be switched on at the same time. That's taken care of by IC1b. The polarity of the AC voltage is reversed during the next half-wave, so IC1c and IC1a switch on T4 and T1, respectively.

As you can see, the voltage dividers are not fully symmetrical. The input voltage is reduced slightly to cause a slight delay in switching on the FETs. That is better than switching them on too soon, which would increase the losses. Be sure to use 1% resistors for the dividers, or (if you can get them) even 0.1% resistors.

The control circuit around the TL084 is powered from the rectified voltage, so an auxiliary supply is not necessary. Naturally, that raises the question of how that can work. At the beginning, there won't be any voltage, so the rectifier won't work and there never will be any voltage...

Fortunately, we have a bit of luck here. Due to their internal structures, all FETs have internal diodes. They allow the circuit to start up (with losses).

There's not much that has to be said about the choice of FETs – it's not critical. You can use whatever you can put your hands on, but bear in mind that the loss depends on the internal resistance. Nowadays, a value of 20 to 50 mW is quite common. Such FETs can handle currents on the order of 50 A. That sounds like a lot, but an average current of 5 A can easily result in peak currents of 50 A in the FETs. The IRFZ48N (55 V @ 64 A, 16 mW) specified by the author is no longer made, but you might still be able to buy it, or you can use a different type. For instance, the IRF4905 can handle 55 V @ 74 A and has an internal resistance of 20 mΩ.
At voltages above 6 V, it is recommended to increase the value of the 8.2-kΩ resistors, for example to 15 kΩ for 9 V or 22 kΩ for 12 V.

(060042-1)

144 ISO Standard for Car Radios

MISCELLANEOUS ELECTRONICS AND DESIGN IDEAS

Giel Dols

A standard for the audio connections of car radios has been generated in order to avoid having every car manufacturer devise its own solution to this common and recurrent issue. This standard has now been adopted by the International Organization for Standardization (ISO). The mechanical construction, dimensions and shape are clearly specified, at least in principle. Here we have to say 'in principle' because some manufacturers cannot resist the temptation to arrange the signals on the connectors according to their own ideas.

Table 1

A Group	Power Supply	
1	RPM pulse	A pulsed RPM signal is used to maintain a constant volume level or to operate a navigation system. Tis is also known as SCV (*Speed Controlled Volume*) or GALA (*GeschwindigkeitsAbhängige LautstärkeAnpassung*).
2	Remote control / ground / telephone mute	Mutes the audio output of the radio. This requires a hands-free kit that pulls pin 2 to ground during a telephone call.
3	Remote control	Strongly brand-dependent.
4	Constant 12 V in orange (*yellow*)	Constantly connected to the +12-V terminal of the battery. Memory settings (stations, tone and time) are thus retained when the radio is switched off.
5	Switched 12 V out / antenna remote *blue*	The motor-driven antenna is extended when 12 V is present on this pin. It can also be used to switch accessories such as amplifiers or sound processors.
6	Lighting *yellow/black*	12 V must be present on this pin to illuminate the buttons of the radio and allow the display to be dimmed.
7	Switched 12 V in *red*	The radio can be switched on if 12 V is present on pin 7 (via the ignition switch).
8	Ground *black* (*brown*)	Connection to the chassis and thus to the negative terminal of the battery.

The assignments of pins 1 to 3 may be swapped, depending on the make or brand. Pin 3 is sometimes used for a brand-specific bus signal.
The assignments of pins 4 and 7 are often swapped (for example, by VW, Audi and Opel).
In recent VW models, pin 5 is used as a supplementary connection for constant +12 V. This means that if you install a different radio, you must disable this connection, as otherwise the new radio will have a short life.).

The classic examples of this are Audi, Opel and VW, which practically make a tradition of exchanging the terminals for the constant supply voltage and switched voltage. As a result, if you connect a new radio it will behave in a very irritating manner: every time you switch off the ignition and remove the key, all your settings will be lost. As a result, most car radio manufacturers provide a simple way to swap these connections in the cabling.

The tables clearly show which signals are assigned to the various pins of the connectors (or how they should be assigned).

It is thus very much recommended to use a multimeter to check whether everything is connected as it should be, especially for the connections in the 'A' group.

(080471-1)

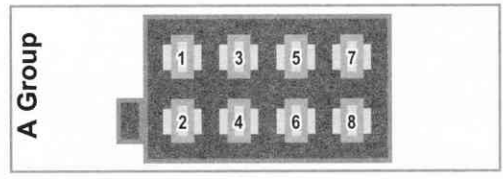

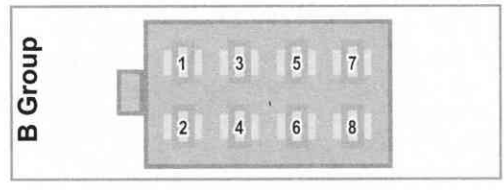

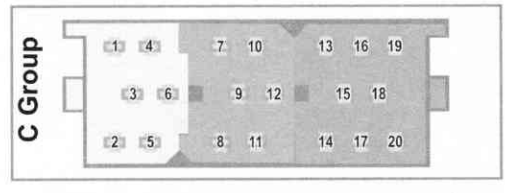

Table 2			
B Group	**Loudspeakers**	**B Group**	**Loudspeakers**
1	+ Right rear, *blue*	5	+ Left front, *green*
2	– Right rear, *blue/black*	6	– Left front, *green/black*
3	+ Right front, *grey*	7	+ Left rear, *brown*
4	– Right front, *grey/black*	8	– Left rear, *brown/ black*

Table 3			
C Group	**Extensions**	**C Group**	**Extensions**
1	Line out, left rear	13	CD ID
2	Line out, ground	14	Brand / make dependent
3	Line out, right rear	15	Ground
4	Line out, left front	16	Constant +12 V
5	Antenna / remote 12 V out	17	Switched +12 V
6	Line out, right front	18	CD changer line in, ground
7...10	Brand / make dependent	19	CD changer line in, left
11	Phone in	20	CD changer line in, right
12	Phone in, ground		
The assignments of pins 1–6 are always as described here. However, recent Becker radios use pin 6 for the subwoofer output. Manufacturers can use the remaining pins as they see fit.			

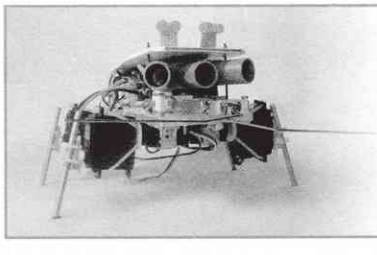

Machine-power starting on page 340!
91 robot-circuits, -ideas, -tips and more...

145 Modulated Light Barrier

HOME AND GARDEN

Heino Peters

It's good fun to keep an eye on all sorts of things in your environment and on the basis of events in this environment to switch, for example, lamps or buzzers.

To help with this, the light barrier described here can be used to guard an entrance. You can use it to signal of someone is walking through the corridor, or to check if the car has been parked far enough in the garage to be able to close the door. The circuit consists of a transmitter, which sends modulated infrared light and a receiver, which recognises this. The circuit used here is almost insensitive to daylight or fluorescent light and therefore can be used outside.

The transmitter (**Figure 1**) generates about 1000 times per second, for a period of 540 ms, a burst of 36 kHz. IC1 has been set with C1, R1 and R2 to a frequency of about 1000 Hz. The output of IC1 ensures that IC2 will oscillate about 1000 times per second for a period of about 540 ms. IC2 is set to a frequency of 36 kHz with C2, P1, R4 and R5. The output of IC2 drives the IR LED D1 via transistor T1. C3 and R3 prevent the reasonably high current through D1 from generating too much interference on the power supply rail.

The receiver (**Figure 2**) is quite a simple design, because IC3 already does a lot of the work for us. When the IC 'sees' an IR-signal with a frequency of 36 kHz, the output of IC3 will become '0'. The transmitter circuit alternates between sending an IR-signal of 36 kHz for 540 ms and is quiet for 470 ms. When this signal arrives at IC3, C4 will discharge via D2. Because the non-inverting input of IC4a is set

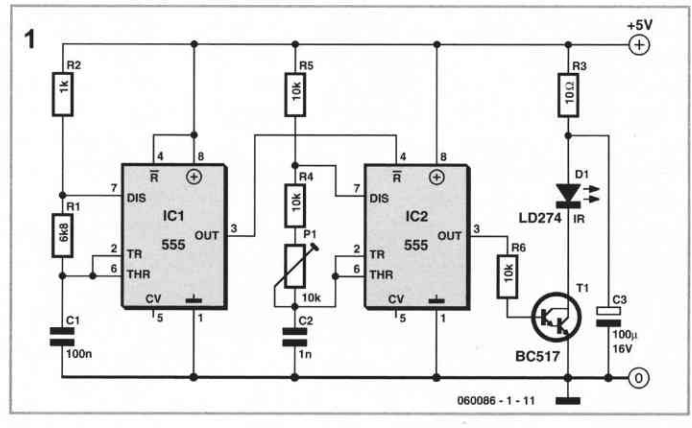

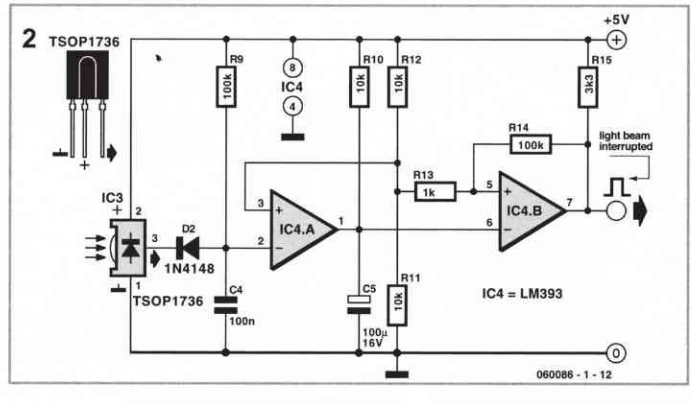

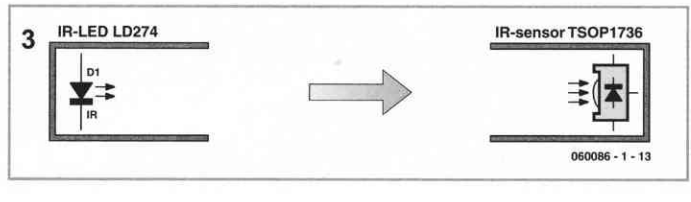

to 2.5 V, with the aid of R10 and R11, the output of IC4a will be a '1'. In the intervening quiet periods of 470 ms, C4 will partially charge via R8, but this is not of sufficient duration to exceed the voltage of 2.5 V. Only when the light barrier is interrupted will C4 charge far enough that the output of IC4a will toggle and become a '0'. Because IC4a has an open-collector output, C5 will be immediately discharged and the output of IC4b will become a '1'.

With R9 and C5 this signal is stretched to about one second. If you increase the value of R9 to 100 kΩ, then this will become about 10 seconds. R12 and R13 are included to prevent chatter of the output around the trigger point, although there is not really a risk of that happening in this circuit. Together with R14, the output of IC4b delivers a clean logic signal that we can use for further processing.
The quickest way of calibrating the frequency of IC2 to 36 kHz, using P1, is with the aid of an oscilloscope. If you do not have one of those, then point the IRLED D1 at the receiver IC3 and turn P1 so that the voltage on the inverting input of IC4a is as low as possible. Make sure that IC3 during the calibration does not receive too high a signal by placing the IR-LED a considerable distance away or by not pointing directly at the receiver. If this procedure is not that successful then just set P1 to the centre position, this works just fine usually.

You should not have a problem with ambient light with this circuit. If you do have a problem because, for example, there is direct sunlight on IC3, then you will need to place it inside a small tube and point it at the IR LED. In this way no direct sunlight can reach the receiver. If the IR LED and the receiver are placed too close together it is possible that the receiver will sense light reflected off the walls, even when someone is standing between the transmitter and receiver. In this case the solution is also a short piece of tube for both the transmit LED as well as the receiver (**Figure 3**). Make sure that the tubes are opaque (paint black or use water pipe, for example). The wires to the IR LED can be several meters long without any problems. Do not place the receiver IC too far from the circuit.

(060086-1)

146 Multitasking Pins

MICROCONTROLLERS

Roland Plisch

It's entirely logical that low-cost miniature microcontrollers have fewer 'legs' than their bigger brothers and sisters – sometimes too few. The author has given some consideration to how to economise on pins, making them do the work of several. It occurred that one could exploit the high-impedance feature of a tri-state output. In this way the signal produced by the high-impedance state could be used for example as a CS signal of two ICs or else as a RD/WR signal.
All we need are two op-amps or comparators sharing a single operating voltage of 5 V and outputs capable of reaching full Low and High

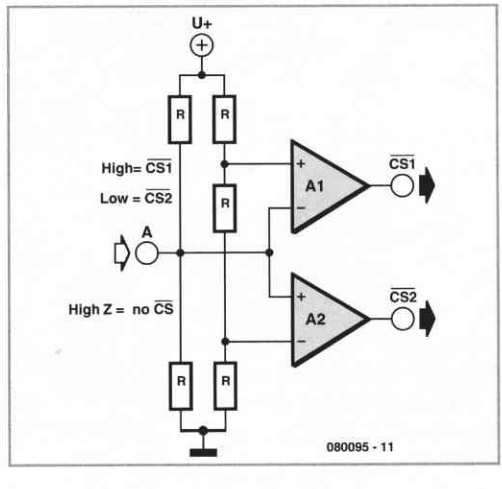

levels in 5-V operation (preferably types with rail-to-rail outputs). Suitable examples to use are the LM393 or LM311. The resistances in the voltage dividers in this circuit are uniformly 10 kilohms.

Consequently input A lies at half the operating voltage (2.5 V), assuming nothing is connected to the input – or the microcontroller pin connected is at high impedance. The non-inverting input of IC1A lies at twothirds and the inverting input of IC1B at one third of the operating voltage, so that in both cases the outputs are set at High state. If the microcontroller pin at input A becomes Low, the output of IC1B becomes Low and that of IC1A goes High. If A is High, everything is reversed.

(080095-I)

147 Lamp in a Wine Bottle

HOBBY AND MODELLING

Sebastian Westerhold

Electronics need not always be a matter of dry theory or be taken with great seriousness. We were reminded of this by the author, who wrote to us to describe a very peculiar 'circuit':

'My other half Jessica is the kind of woman, rather rare on this planet, who takes a keen interest in the wonderful world of electronics and who shows great forbearance towards the hours I spend immersed in my hobby.

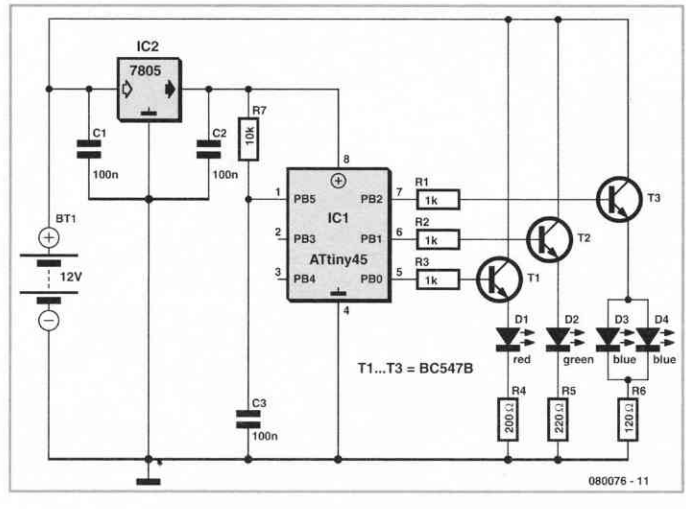

For Christmas 2006 I gave her a soldering iron, a small set of tools and a bundle of components. They went down rather well, and it was not long before LEDs were flashing away under the control of an NE555, 4017 and other bits and pieces.

At some point in the following autumn Jessica asked me to come and look at her latest 'circuit'. On the way down to the cellar I imagined the possibilities for what might await me in my workshop. What I saw, however, I never would have expected: each made from a resistor and a capacitor, artfully soldered together, a pair of earrings! And all RoHS compliant, of course.'

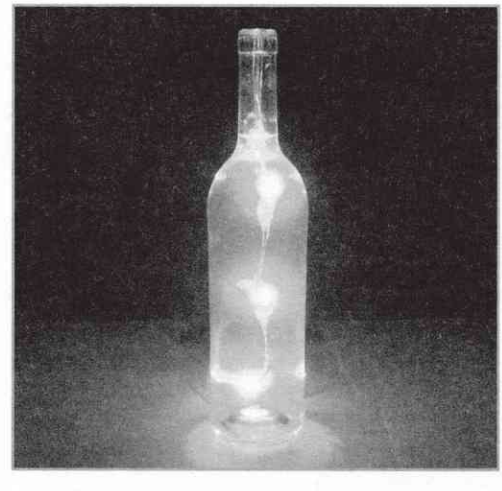

The inventive project described here is also a product of Jessica's creative flair. The couple were experimenting with filling wine bottles with water, and adding various chemical colourants.
Then LEDs of various colours were submerged in the liquid, giving strange and beautiful lighting effects. The ultraviolet-active dye 'fluorescein sodium' gives off an intense green light when stimulated using blue, or even better, ultraviolet, LEDs. Rhodamine B is another ultraviolet-active dye: in this case the emitted light is bright red.
Both fluorescein sodium and Rhodamine B can be ordered via chemist's shops, or, more economically, over the Internet. Although the prices of these dyes may appear high, only very tiny quantities are needed: one gram of dye is enough for at least ten wine bottles full of water.

Even more spectacular effects can be achieved using a full-colour RGB LED in conjunction with these dyes. The driver circuit, which is an ideal project for beginners, can be built on a small piece of perforated board in half an hour or so. Being microcontroller based, the circuit is very compact.
As always, the software is available for download from the Elektor website at *www.elektor.com*.
Ready-programmed microcontrollers are also available: the order code is 080076-41.

(080076-I)

148 PWM Control for Permanent Magnet Motors

MISCELLANEOUS ELECTRONICS AND DESIGN IDEAS

Franz P. Zantis

DC motors with permanent magnets are widely used and popular among model builders. A particular characteristic of these motors is a large discrepancy between the startup torque and the nominal torque.

If a permanent magnet motor is to be powered from a DC supply and a constant, high torque is required at a variable operating speed, a pulsewidth modulator (PWM) of the type described here is needed.
We construct an astable multivibrator with the help of a couple of gates from a 40106 hex

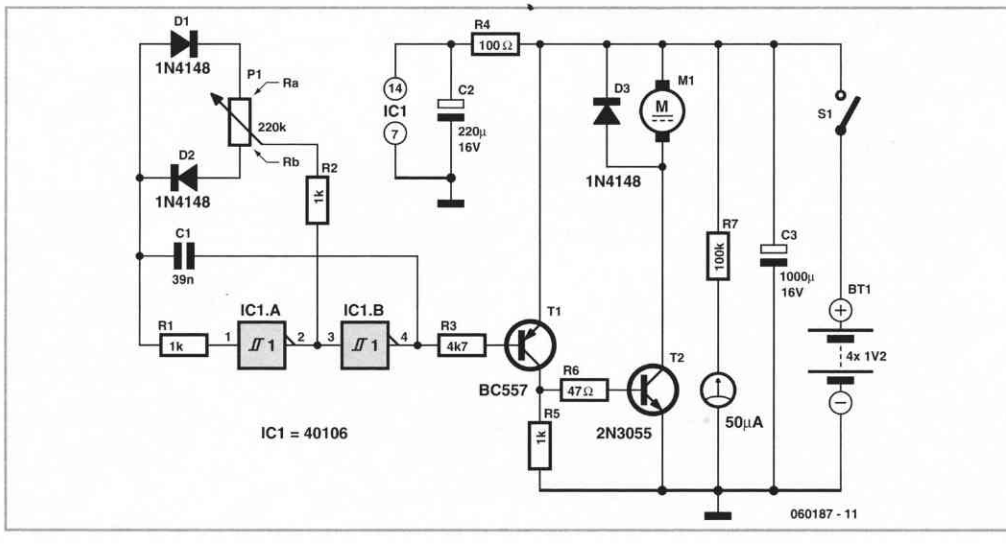

Schmitt trigger IC. The multivibrator has a mark-space ratio ('duty factor') that can be adjusted over a very wide range, independent of its operating frequency. Adjusting the potentiometer changes the ratio between R_a and R_b, which together make up the total resistance of the potentiometer. Capacitor C1 is charged via R_b and is discharged via R_a. The corresponding mark-space ratio is present at the output of the oscillator on pin 4 of the 40106. The output high time is determined by R_a, while the output low time is determined by R_b. The oscillator frequency is constant at approximately 115 Hz. Transistor T1 provides current gain: when pin 4 of the 40106 is low, T1 turns on, and when the output is high, T1 is turned off. Sufficient current is available at the collector of this transistor to drive the base of the 2N3055 power transistor. R4 and C2 provide decoupling for the oscillator from the large currents switched by the power output stage. The moving-coil meter connected via R7 serves to monitor the state of the battery, which is useful when rechargeable cells are used.

The circuit has been used by the author to drive a motor salvaged from an old cassette tape recorder. In this case the 2N3055 did not require a heatsink.

Interested readers will find that a search of the Internet turns up plenty of information on the theory and practice of driving DC motors using pulsewidth modulation.

(060187-I)

149 On/off Infrared Remote Control

HOME AND GARDEN

Christian Tavernier

Most homes today have at least a few infrared remote controls, whether they be for the television, the video recorder, the stereo, etc. Despite that fact, who among us has not cursed the light that remained lit after we just sat down in a comfortable chair to watch a good film? This project proposes to solve that problem thanks to its original approach. In fact, it is for a common on/off switch for infrared remote controls, but what differentiates it from the commercial products is the fact that it is capable of working with any remote control.

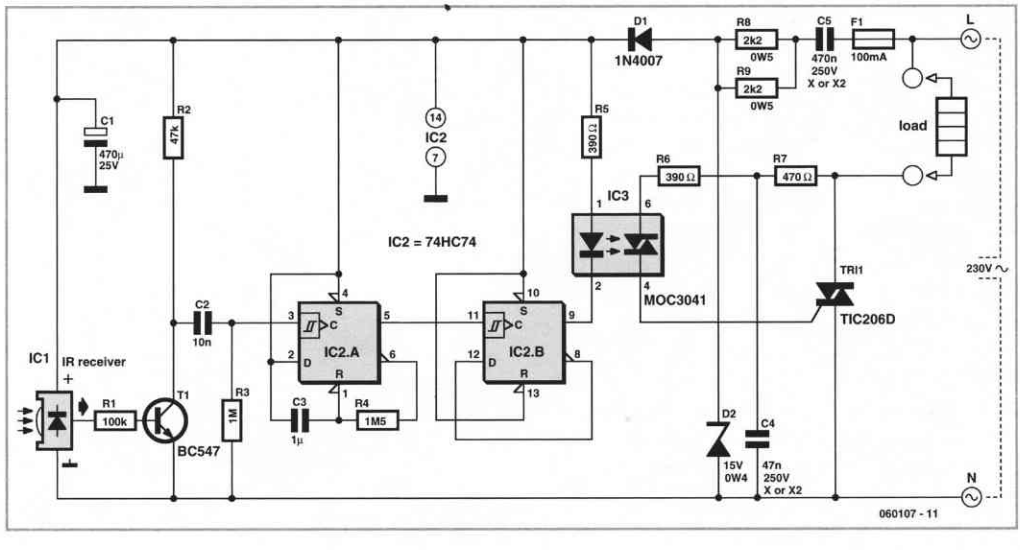

Therefore, the first one you find allows you to turn off the light and enjoy your movie in the best possible conditions.
The infrared receiver part of our project is entrusted to an integrated receiver (Sony SBX 1620-52) which has the advantage of costing less than the components required to make the same function. After being inverted by T1, the pulses delivered by this receiver trigger IC2a, which is nothing other than a D flip-flop configured in monostable mode by feeding back its output $\overline{Q}$ on its reset input via R4 and C3. The pulse that is produced on the output Q of IC.2A makes IC.2B change state, which has the effect of turning on or turning off the LED contained in IC3. This circuit is an opto triac with zero-crossing detection which allows our setup to accomplish switching without noise. It actually triggers the triac T2 in the anode where the load to be controlled is found. The selected model allows us to switch up to 3 amperes but nothing should stop you from using a more powerful triac if this model turns out to be insufficient for your use.
In order to reduce its size and total cost, the circuit is powered directly from the mains using capacitor C5 which must be a class X or X2 model rated at 230 volts AC. This type of capacitor, called 'selfhealing', is the only type we should use today for power supplies that are connected to ground.
'Traditional' capacitors, rated at 400 volts, do not really have sufficient safety guarantees in this area. Considering the fact that the setup is connected directly to the mains, it must be mounted in a completely insulated housing. A power outlet model works very well and can easily be used to interspace between the grounded wall outlet and that of the remote control device.
Based on this principle, this setup reacts to any infrared signal and, as we said before, this makes it compatible with any remote control. On the other hand, it has a small disadvantage which is that sometimes it might react to the 'normal' utilization of one of these, which could be undesirable. To avoid that, we advise you to mask the infrared receiver window as much as possible so that it is necessary to point the remote control in its direction in order to activate it.

www.tavernier-c.com (060107-1)

150 22-bit A/D Converters

TEST AND MEASUREMENT

Steffen Graf

When accuracy matters more than speed, the MCP3550 series of analogue-to-digital converters from Microchip [1] is worth a look. They are ideal for accurately measuring DC voltages that only change slowly over time, offering an extremely high resolution of 22 bits while only drawing a paltry 150 μA from a 5 V power supply.

With the addition of a low power voltage reference such as the MAX6520 [2] as shown in the circuit diagram we have an ultra-precise analogue-to-digital converter with a total current consumption of around 0.2 mA, using only a minimum number of components. The

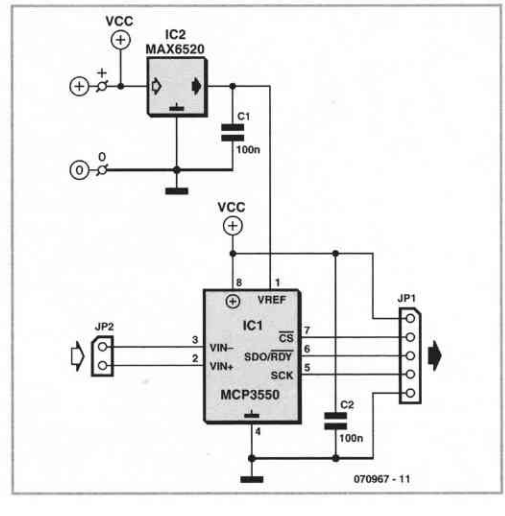

conversion results are output using a serial interface that is easy to connect to the SPI port of a microcontroller. A file containing a printed circuit board layout for this design is available for free download from *www.elektro.com*.

Type	**Notch** (Hz)	**Sample rate** (Hz)	**Eff. res.** (bit)
MCP3550-50	50	12,5	21,9
MCP3550-60	60	15	21,9
MCP3551	50 & 60	13,75	21,9
MCP3553	–	60	20,6

Microchip make four versions of these ICs. As the table shows, they differ in the frequency of the built-in notch filter, which is designed to help suppress mains hum. They also have different sample frequencies, as well as different effective resolutions.

(070967-I)

Web Links
[1] *ww1.microchip.com/downloads/en/DeviceDoc/21950c.pdf*
[2] *http://datasheets.maxim-ic.com/en/ds/MAX6520.pdf*

151 R8CKey

MICROCONTROLLERS

Jean Brunet

The small board shown in the photograph will conveniently replace the installation of several components when using the R8C 16-bit Tom Thumb module for programming.

In **Figure 1**, you'll find the transistors and their corresponding resistors, the Reset button and the Mode switch, all from our first article on the R8C/13. The R8Ckey is powered by the setup using the K2 6-pin connector which is plugged into socket K3 that normally holds the R8C module. This is used to bypass various components, specifically those which made up the original power supply. The advantage here, of course, is to enable a much easier insertion of the R8C module.

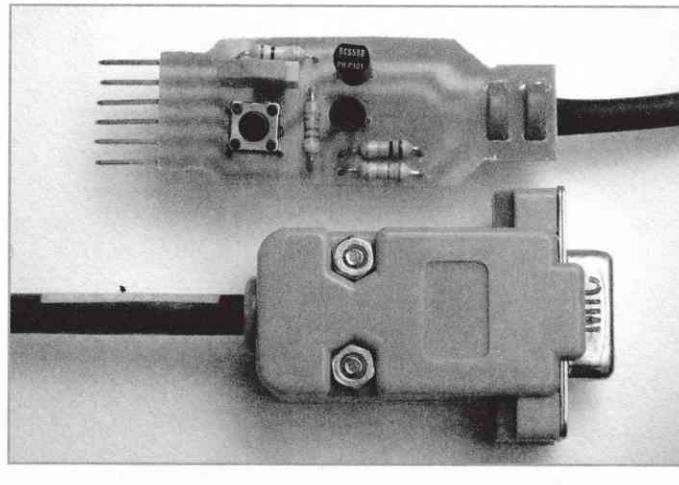

COMPONENTS LIST

Resistors
R1 = 100 kΩ
R2 = 4kΩ7
R3 = 27 kΩ
R4 = 10 kΩ

Semiconductors
T1 = BC548C
T2 = BC558C

Miscellaneous
S1 = pushbutton (Reset)
S2 = slide switch (Mode)
K1 = 9-way sub-D socket (female) for cable mounting
K2 = 6-way gold-plated SIL pinheader
1 m shielded cable with 2 conductors

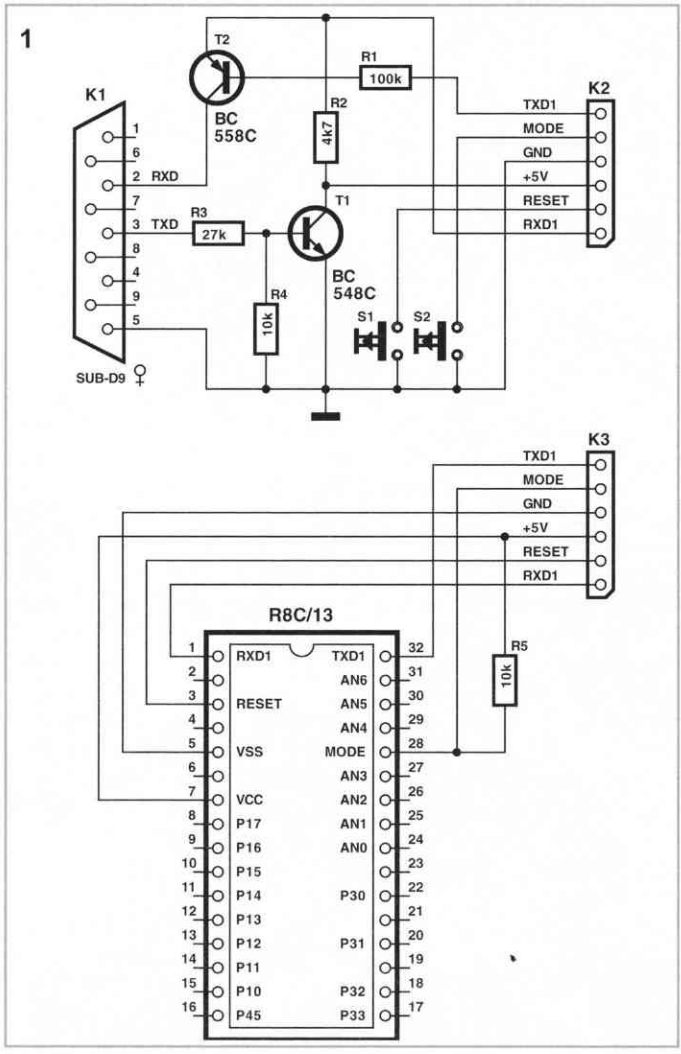

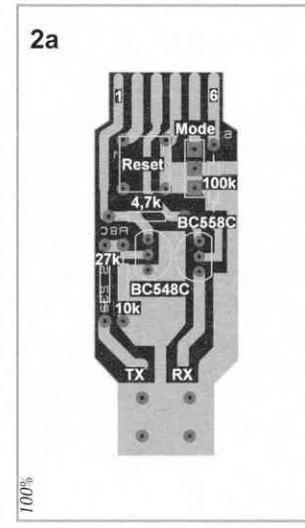

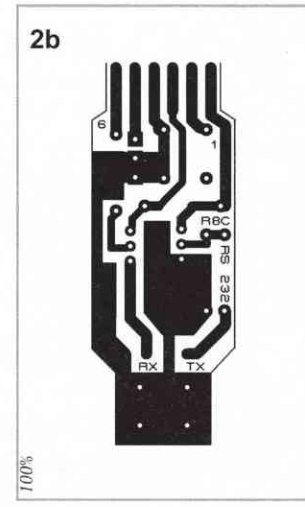

Mounting the R8CKey board

There isn't a lot to say about making the R8Ckey board. The PCB artwork (**Figure 2**) shows that installing the components is extremely easy. Adding a switch, a button and a few passive and active (two transistors) components should not be too difficult.

Begin by soldering the gold-plated singlerow 6-contact connector. Solder it with its plastic base in order to retain the proper spacing, then forcefully slide out the plastic part to remove it.

Solder the resistors, the transistors, the Reset button and the slide switch S2.

The cable is soldered on the R8Ckey with the braided ground wire directly on the ground layer of the board. Two nylon self-locking cable ties keep the cable in place. At the end of the cable, pin 2 of the RS-232 port corresponds to RxD on the board, while, on the copper side, pin 3 corresponds to TxD, and pin 5 carries ground.

Implementation of the R8CKey

Warning: Make sure the R8Ckey is properly oriented in socket K3. It must be positioned with the copper side toward the R8C. Inversion will destroy the transistors on the board.

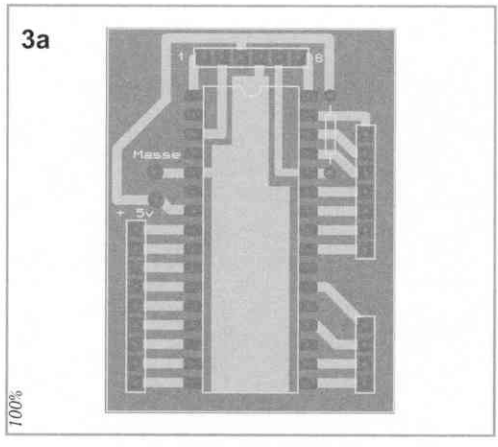

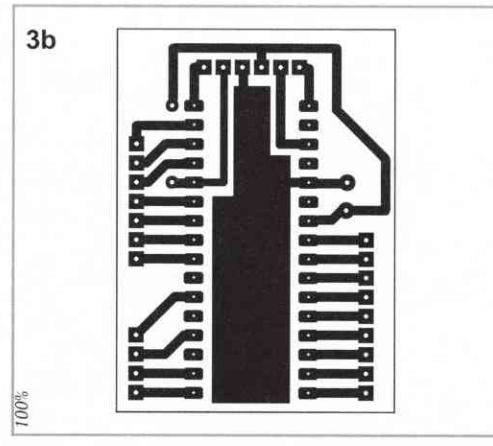

The R8Ckey is very easy to use. You only have to insert it into its socket in front of the R8C, respecting the orientation, as we were saying above, the 'copper' side facing toward the R8C. Then, connect the 9-way sub-D plug to the RS232 port on the PC. Turn the setup on, slide the Mode switch toward the top, and push the Reset button. Now, all that's left to do is start programming the chip.

Installation at the top of the R8C/13

The diagram given in **Figure 1b** is practically 'transparent' because it is limited to a simple 6-pin connector. We propose the component mounting plan for this second board and its track design in **Figure 3**. Making the second printed circuit, the one for the R8C side is very simple, as can be seen in this example.

The only thing to solder on the board being tested is the 10 kΩ resistor connected between the Mode pin (pin 28) of the R8C board socket and the +5 V line.

The PCB artwork was produced in Proteus ARES format and can therefore be used 'as is' with this printed circuit design program. The relevant files can be downloaded from the author's website (see below).

http://perso.wanadoo.fr/asnora/R8C/r8ckey.htm (060175-1)

152 Energy-efficient Backlight

POWER SUPPLIES, BATTERIES AND CHARGERS

Rainer Reusch

The backlights used in some LCD panels are not exactly economical: typical current draws of 20 mA to 100 mA are common. Normally the current is determined by a series resistor, which leads to additional power losses. It is considerably more efficient, if a little more complex, to use a switching regulator IC. Alternatively, it is often the case that driving the LCD panel is a microcontroller, which we can press into service to provide regulation in software.

Fortunately, the regulation does not need to be exceptionally precise. At the heart of our circuit is T1, a pchannel MOSFET, which is driven by an inverted (active low) pulsewidth modulated signal from the microcontroller. Components D1, L1 and C1 form the remainder of the standard step-down switching regulator configuration.

In the circuit diagram the LCD backlight is represented by two LEDs; the current flowing through these LEDs is measured by a shunt resistor, filtered, and finally amplified to a le-

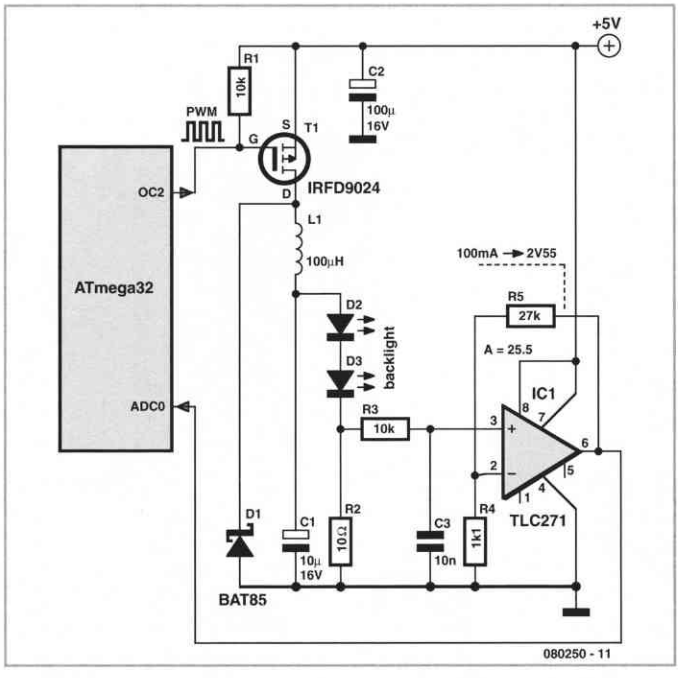

vel suitable for input to the A/D converter in the microcontroller using an operational amplifier. R1 ensures that the transistor switches off completely when the microcontroller is reset (at which time all ports become inputs).

The circuit can be used with any microcontroller that can generate an inverted PWM signal at a frequency in the range 10 kHz to 100 kHz. We have developed a demonstration program and code module for the Atmel ATmega32 using GNU C. The source code can be downloaded from the Elektor website at *www.elektor.com* or from the author's site at *http://reweb.fh-weingarten.de/elektor*.

The program generates the PWM signal at 31.25 kHz (if the processor clock is 8 MHz) on the OC2 output (PD2) of the ATmega32 microcontroller. The pulse width can be adjusted in 256 steps. If the gain of the operational amplifier is 25.5 a current of 100 mA through the LEDs will correspond to a voltage of 2.55 V at the input to the A/D converter.

The internal reference voltage of the ATmega32 is nominally 2.56 V, and so an LED current of 100 mA will lead to a tenbit conversion result of 03FFh. It is sufficient to monitor only the top eight bits of this value, and depending on the error from the desired value, increment or decrement the pulse width of the PWM signal. This forms an integral controller. As it stands, this solution cannot compete on simplicity with a series resistor. However, we can make some simplifications to the circuit by eliminating the regulation feedback loop. Dispense with the operational amplifier and surrounding circuitry, and have the software output a fixed PWM signal. This loses the ability of the circuit to compensate for part-to-part variation in the components and for temperature, but in practice such compensation is rarely necessary. The software also supports the simplified version of the circuit.

(080250-I)

153 Temperature Sensitive Switch for Solar Collector

HOME AND GARDEN

Tom Henskens

This circuit can be used to turn the pump on and off when a solar collector is used to heat a swimming pool, for example. This way the water in the collector has a chance to warm up significantly before it is pumped to the swimming pool. A bonus is that the pump

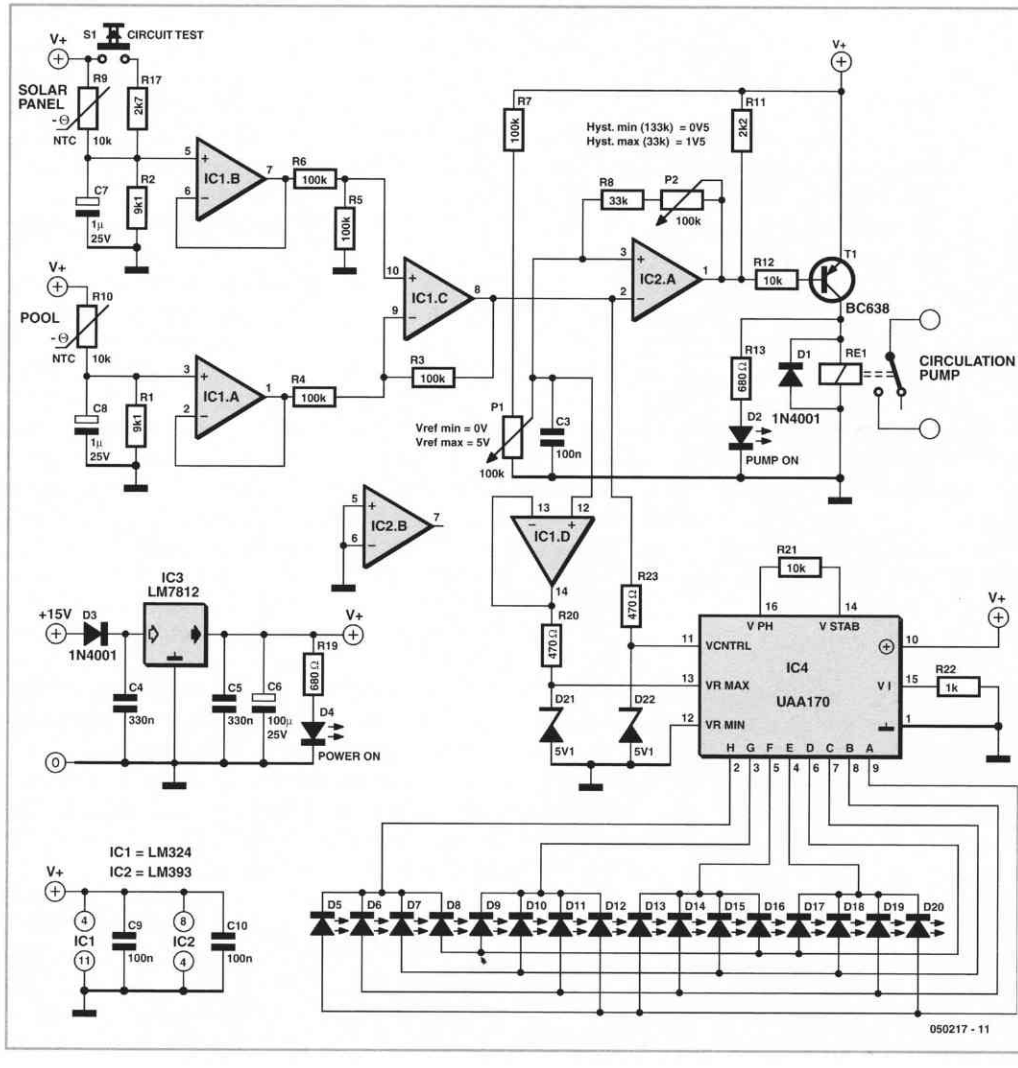

doesn't need to be on continuously. The basis of operation is as follows. When the temperature of the water in the solar collector is at least 10 °C higher than that of the swimming pool, the pump starts up. The warm water will then be pumped to the swimming pool and the temperature difference will drop rapidly. This is because fresh, cool water from the swimming pool enters the collector. Once the difference is less than 3 °C the pump is turned off again.

R10/R1 and R9/R2 each make up a potential divider. The output voltage will be about half the supply voltage at a temperature around 25 °C. C7 and C8 suppress any possible interference. The NTCs (R9 and R10) are usually connected via several meters of cable, which can easily pick up interference.

Both potential dividers are followed by a buffer stage (IC1a/IC1b). IC1c and R3, R4, R5 and R6 make up a differential amplifier (with unit gain), which measures the temperature difference (i.e. voltage difference).

When both temperatures are equal the output is 0 V. When the temperature of the solar

collector rises, the differential amplifier outputs a positive voltage. This signal is used to trigger a comparator, which is built round an LM393 (IC2a).
R7 and P1 are used to set the reference voltage at which the comparator changes state. R8 and P2 provide an adjustable hysteresis. R11 has been added to the output of IC2a because the opamp has an open collector output. A power switch for the pump is created by R12, T1 and Re1. D1 protects T1 against voltage spikes from the relay coil when it is turned off.

A visual indication of the state of the controller is provided by IC4 (UAA170), a LED spot display driver with 16 LEDs. The reference voltage for the comparator is buffered by IC1d and fed to input VRMAX of the UAA170. R20/D21 and R23/D22 limit the input voltages of IC4 to 5.1 V, since the maximum permissible input voltage to the UAA170 is 6 V.

When there is no temperature difference, LED D20 turns on. As the temperature difference increases the next LED turns on. The full scale of the LED bar is equal to the reference voltage of the comparator. This means that when the last LED (D5) of the UAA170 turns on, the comparator switches state. This is also indicated by D2.

The power supply has been kept fairly simple and is built around a LM7812 regulator. The circuit is protected against a reverse polarity at the input by D3. You have to make sure that the input to the regulator is at least 15 V, otherwise it won't function properly.

There are a few points you should note regarding the mounting of the NTCs. NTC R9 should be placed near the output of the solar collector. You should choose a point that always contains water, even when some of the water flows back a little. NTC R10 should be mounted inside the filter compartment (where it exists), which continually pumps the swimming pool water. This will give a good indication of the temperature of the water.
The way the circuit has to be set up depends how it has been installed and is very much an experimental process. To start with, set hysteresis potentiometer (P2) halfway. Then set the reference voltage to about 1.5–2 V with P1.
On a sunny day you can measure the voltage difference to get an idea as to which reference voltage needs to be adjusted.
The hysteresis setting determines how long the pump stays on for, which is until the minimum temperature difference has been reached.

(050217)

154 Simple LED Bike Light

MISCELLANEOUS ELECTRONICS AND DESIGN IDEAS

Gatze Labordus

On my mountain bike I always used to have one of those well-known flashing LED lights from the highstreet shop. These often gave me trouble with flat batteries and lights that fell off. As an electronics student I thought: "this can be done better".
First I bought another front wheel, one which has a dynamo already built in the hub. This supplied a nice sine wave of 30 Vpp (at no load).

With this knowledge I designed a simple power supply. The transistors that are used are type BD911. These are a bit of an overkill, but there were plenty of these at my school, so that is why I used them. Something a little smaller will also work.
The power supply is connected to an astable multi-vibrator. This alternately drives the front light and the rear light. The frequency is determined by the RC time-constant of R3 and C3, and R2 and C4. This time can be calculated with the formula:

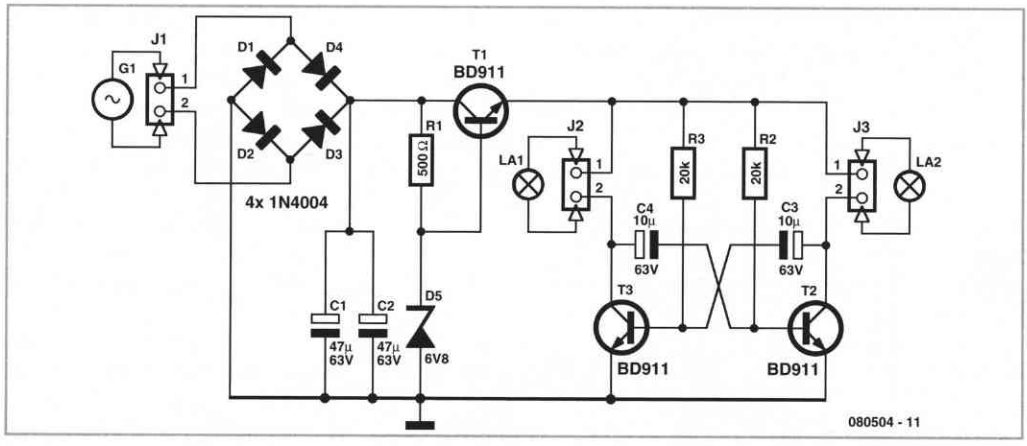

$$t = R3 \cdot C3 = 20 \cdot 10^3 \cdot 10 \cdot 10^{-6} = 0.2\,\text{s}$$

You can use a 22 kΩ (common value) for R2 and R3, that doesn't make much ifference.
On a small piece of prototyping board are ix LEDs with a voltage dropping resistor in series with each pair of LEDs. Such a PCB is used for both the front and the rear of he bike. Of course, you use white LEDs for the front and red ones for the rear. The PCB ith the main circuit is mounted under the eat, where it is safe and has been working for more than a year now.
There are a few things I would change for the next revision. An on/off switch would be nice. And if the whole circuit was built with SMD parts it could be mounted near the front light. This would also be more onvenient when routing the wiring. Now he cable from the dynamo goes all the way to the seat and from there to the front and rear lights.

(080504-I)

155 Mains Slave Switcher II

HOME AND GARDEN

Bart Trepak

There are many situations where two or more pieces of equipment are used together and to avoid having to switch each item on separately or risk the possibility of leaving one of them on when switching the rest off, a slave switch is often used. Applications which spring to mind are a computer/printer/scanner etc or audio amplifier/record deck/tuner combinations or perhaps closest to every electronics enthusiast's heart, the work bench where a bench power supply/oscilloscope/soldering iron etc are often required simultaneously. The last is perhaps a particularly good example as the soldering iron, often having no power indicator, is invariably left on after all the other items have been switched off. Obviously the simplest solution is to plug all of the items into one extension socket and switch this on and off at the mains socket but this is not always very convenient as the switch may be difficult to reach often being behind or under the work bench.

Slave switches normally sense the current drawn from the mains supply when the master unit is switched on by detecting the resulting voltage across a series resistor and switching on a relay to power the slave unit(s). This means that the Live or Neutral feed must be broken to allow the resistor to

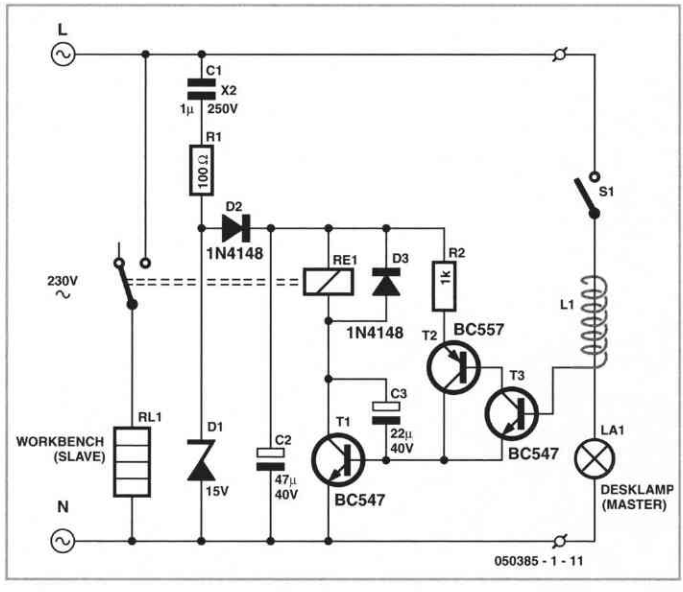

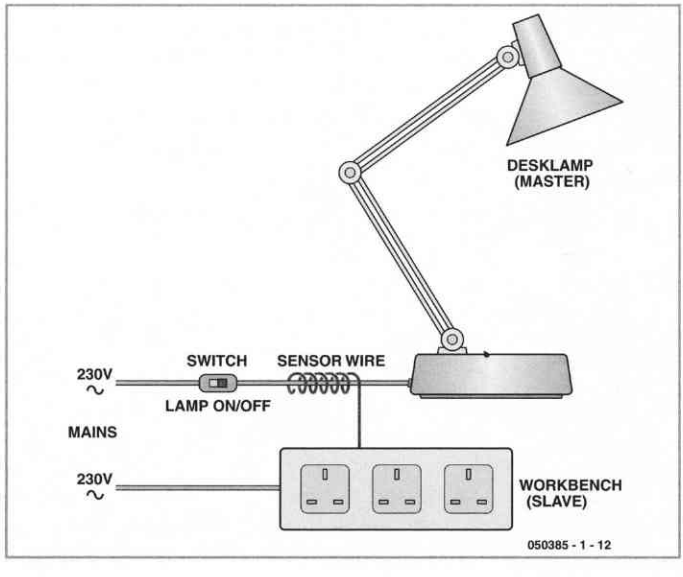

be inserted. This circuit, which is intended for switching power to a work bench when the bench light is switched on, avoids resistors or any modifications to the lamp or slave appliances by sensing the electric field around the lamp cable when this is switched on. The lamp then also functions as a 'power on' indicator (albeit a very large one that cannot be ignored) that shows when all of the equipment on the bench is switched on.

The field, which appears around the lamp cable when the mains is connected, can be sensed by a short piece of insulated wire simply wrapped around it and this is amplified by the three stage amplifier which can be regarded as a single super-transistor with a very high gain.

The extremely small a.c. base current results in an appreciable collector current which after smoothing (by C3) is used to switch on a relay to power the other sockets. Power for the relay is obtained from a capacitor 'mains dropper' that generates no heat and provides a d.c. supply of around 15 volts when the relay is off. The output current of this supply is limited so that the voltage drops substantially when the relay pulls in but since relays require more current to operate them than they do to remain energised, this is not a problem.

Since the transistor emitter is referenced to mains Neutral, it is the field around the mains Live which will be detected. Consequently, for correct operation the Live wire to the lamp must be switched and this will no doubt be the case in all lamps where the switch is factory fitted.

In case of uncertainty, a double-pole switch to interrupt both the Live and Neutral should be used. The sensitivity of the circuit can be increased or decreased as required by altering the value of the T2 emitter resistor. The sensing wire must of course be wrapped around a section of the lamp lead after the

switch otherwise the relay will remain energised even when the lamp has been switched off.

The drawing shows the general idea with the circuit built into the extension socket although, depending on the space available an auxiliary plastic box may need to be used.

(050385-1)

Warning
The circuit itself is not isolated from the mains supply so that great care should be taken in its construction and testing. The sensor wire must also be adequately insulated and the circuit enclosed in a box to make it inaccessible to fingers etc. when it is in use.

156 Hyper-simple Battery Capacity Tester

TEST AND MEASUREMENT

J. van der Sterre

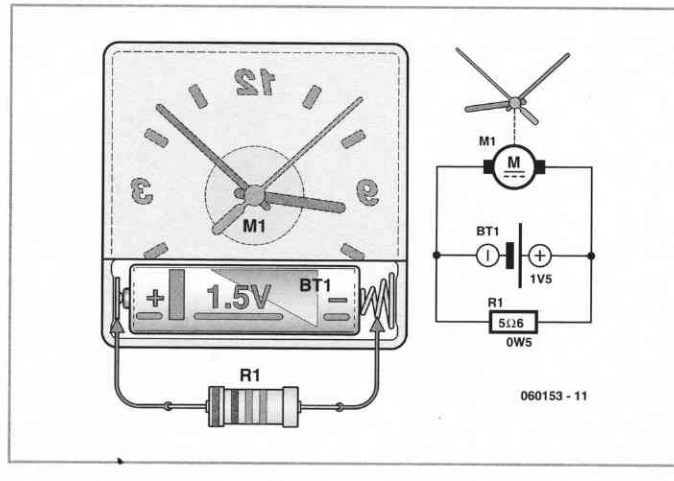

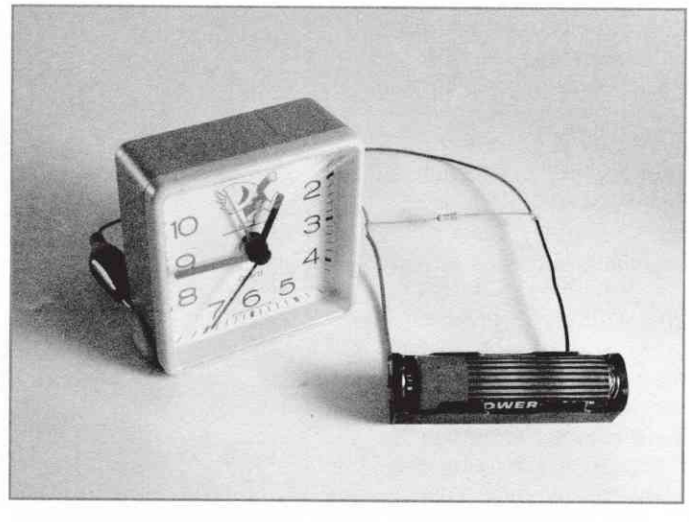

The circuit described here is eminently suitable to indicate the capacity of a battery. We use a cheap electric clock for this. By connecting a resistor across the battery terminals, the battery is discharged somewhat faster than with the clock alone. If we pick a resistor with a value of 5.6 Ω, the discharge current amounts to 1.2 V / 5.6 Ω = 214 mA. If we multiply this with the number of hours that the clock ran after the battery was connected up then we know (approximately) the capacity of the battery.

When discharging a NiCd battery we need to make sure we remove the battery the moment the clock stops running. NiCd batteries do not tolerate too deep a discharge very well. We therefore recommend keeping an eye on the voltage in one way or another, for example by connecting a multimeter in parallel with the resistor.

(060153-1)

157 Outside Light Controller

Wim de Jong

This controller turns on the outside lights as soon as it becomes dark and then turns the lighting off at a set time, so that the lights are not burning needlessly all night long.

It is also possible to automatically turn the lights on again in the morning at another preset time. Then once it is light enough outside they turn off again.

You could obtain this functionality with an LDR and a switching time clock. The LDR senses when it is dark enough and the clock can turn the lights off again at a preset time, and the other way around.

To keep the design simple and cheap, a different solution was chosen for this switching clock. A normal clock needs to be set initially and perhaps again periodically as the clock drifts after a while. In addition, a display is required to set this clock, plus a few push buttons.

Here a different approach is taken. Starting with the fact that an LDR can detect the sunrise and sunset and that the sun 'loops' around in 24 hours, we can use this knowledge as an alternative

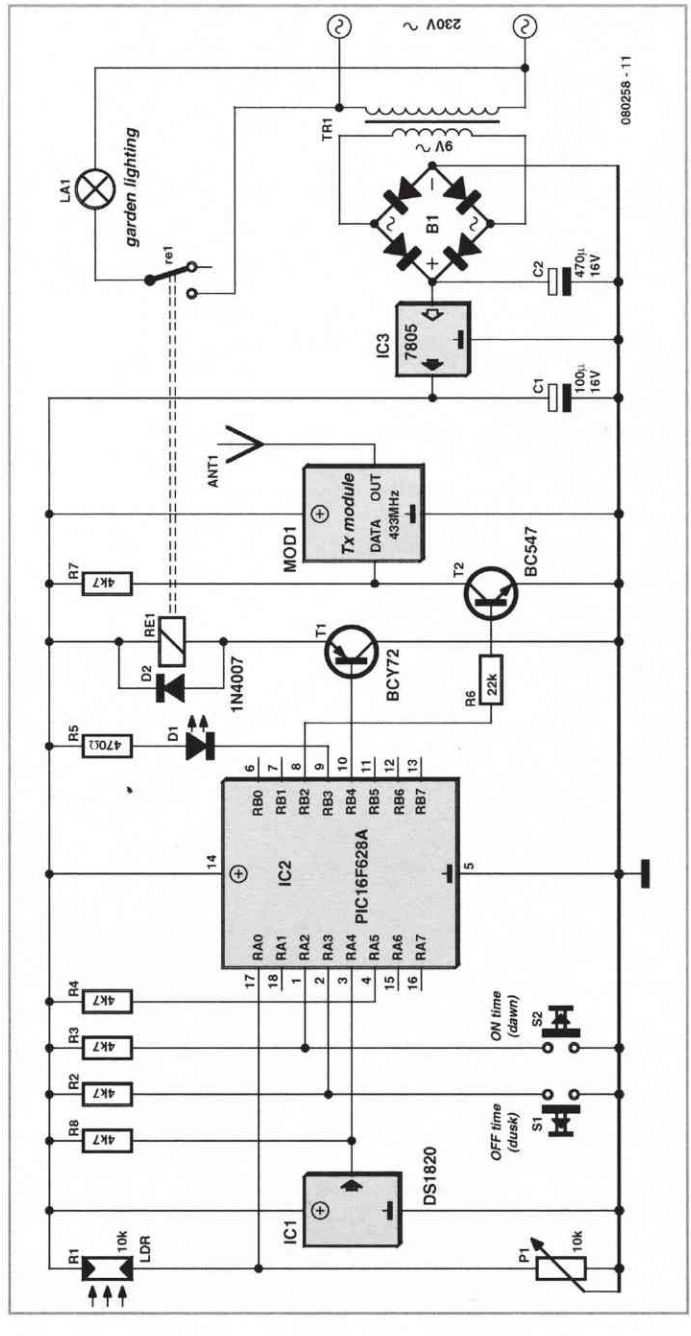

method for determining the time. This clock does not need to be set. The solar clock is born.

The controller is built around a PIC16F628A, which runs from its internal RC oscillator at 4 MHz.
When sunrise is detected, a counter is started, this counter keeps running until the following sunrise (reset).
At sunset, the current value of the counter is stored in the variable 'zontot'. So after sunset the time can be determined with the formula:

time = counter – zontot/2

This design has two pushbuttons to set the switching times; 'Evening off' (S1) and 'Morning on' (S2). The push buttons can only be operated after sunset and before sunrise.
If in the evening (after sunset, the garden light are on) button S1 is pushed, the lights will from now on go off at this particular time.
When button S2 is pressed in the morning before sunrise, the lights, from now on, will turn on at this time and continue to be on until sunrise.
These times are stored in the EEPROM inside the PIC so that they are not lost when the supply voltage is removed.

The DS1820 temperature sensor shown in the schematic and the 433-MHz transmitter (a cheap transmit/receive module from Conrad Electronics) are optional. These can be used to measure the outside temperature and send it to a receiver in the house. This outside temperature is sent as a byte once every minute and at a baud rate of 1200 bits/s (8 bits, no parity) with a resolution of half a degree. $-2=-1°$, $0=0°$, $2=1°$ etc.

Sensor and transmitter can be omitted without any problems if this functionality is not required.

The adjustment procedure is as follows. Set the potentiometer so that the LED is on when it is dark and off when it is light. Leave the circuit alone for a 24-hour period so that the controller can synchronise with the daily sun cycle.
After that you can use the two pushbuttons to set the switching times.

(080258-I)

Downloads
The source and hex code files for this project are available as a free download from *www.elektor.com*; file #080258-11.zip.

158 Preset Circuit for Servòs

HOBBY AND MODELLING

Elmar Jongerius

This circuit was called into life to operate servomotors from the model world.
The emphasis here is remembering certain preset values. For this, the internal memory of a PIC16F628A is used.
The module can be used to automate various mechanical functions. In addition to the usual model building applications, the circuit can also be used for the operation of small cranes, mirrors, etc. The preset-circuit can also be useful when doing demonstrations.

The hardware is very simple by design. When the circuit is powered up, it automatically drives the servo to the initial position. The circuit is operated using seven pushbuttons. The table details the functions of the pushbuttons. The pull-up resistors for the pushbuttons are already built into the PIC and the de-bouncing is handled by the software. Two LEDs are used to indicate the limit values and the power supply is provided by a standard circuit around a 7805. Additionally, it is convenient to use a connector so that a servomotor can be connected easily.

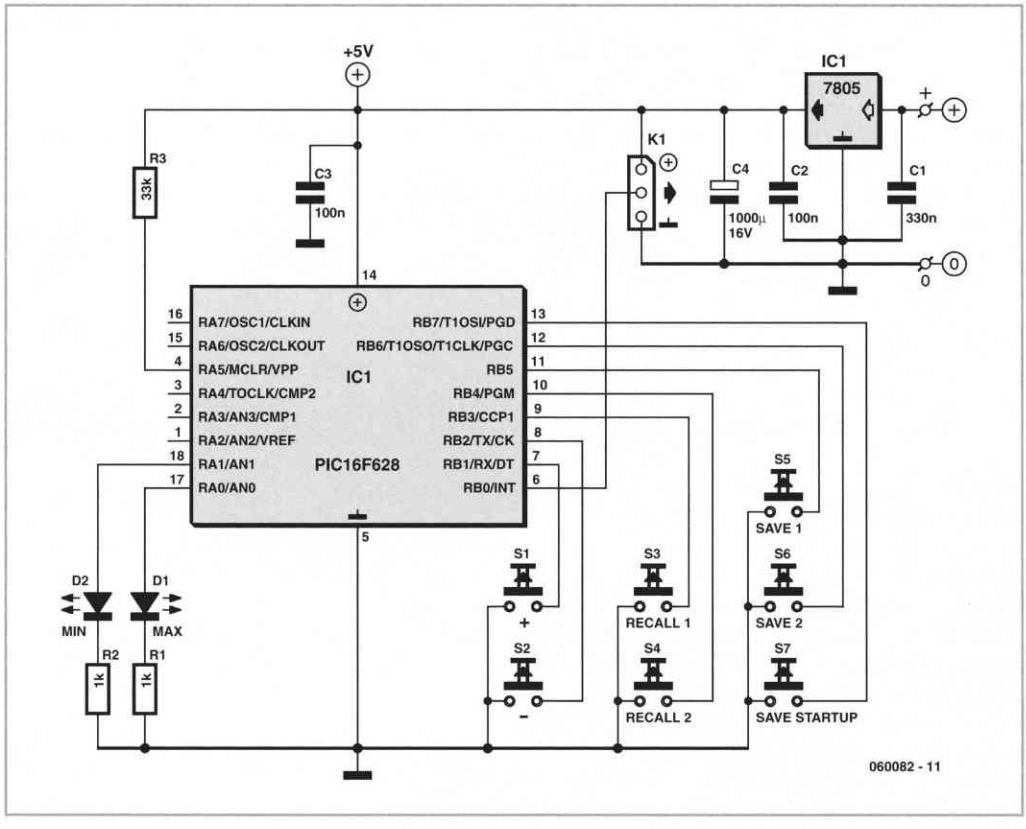

No.	Name	Function
S1	Up	Move the servo in the positive direction
S2	Down	Move the servo in the negative direction
S3	Recall 1	Recall the value of Set 1
S4	Recall 2	Recall the value of Set 2
S5	Set 1	Store the current position in Set 1
S6	Set 2	Store the current position in Set 2
S7	Set Initial	Store current position as initial position

The operation of the servo is done with pulses of different lengths. These pulses need to be repeated about every 20 ms. A pulse duration of 1.5 ms corresponds approximately to the neutral position of the servo. The limit positions of the servo are at pulse durations of about 0.8 and 2.2 ms (this depends on the type of servo).

The program running in the microcontroller consists of a loop, which is repeated every 20 ms and comprises the following steps:

- check for pushbutton presses;
- check for valid values and turn on one of the LEDs if the limit value has been reached;
- send the pulse;
- wait 20 ms.

When checking for pushbutton presses, the IC will immediately carry out the corresponding action, for example storing a value in EEPROM. Because the buttons are checked once every 20 ms, additional de-bouncing is not necessary.

We have a few things that need to be noted regarding the construction of the circuit. Provide sufficient cooling for IC1, particularly if it is used with a high power servo or if the servo is exerting force continuously, for example against a spring. Also make sure that the

servo is connected correctly. Different manufacturers use different colour codes. Fit C3 as close as possible to the PIC. This is because C3 serves to suppress interference from the servo.

The software for the project has been written in PICbasic and includes comments. The program is easily compiled and optionally changed with the free Lite version of the Proton PICbasic compiler. It is however necessary to remove the comments.

The program code can be downloaded from www.elektor-electronics.co.uk, you'll find it filed as number **060082-11.zip**. A pre-programmed PIC is available as order code **060082-41**. A version of PICbasic can be obtained from *www.picbasic.org*.

(060082-1)

159 Golf Tally

HOBBY AND MODELLING

Stefan Hoffmann

For electronics enthusiasts building your own golf scorekeeper is a must (buying one is degrading – far too easy!). Then you can keep an eye on your total strokes on the course (and impress the other players naturally).

This example is based on an ATtiny44 microcontroller, equipped with just two seven-segment displays and two data entry keys (to minimise power needs).

The three EEPROM variables (18 arrays) used in the Bascom software are: Course-Par, the par for the course per hole, PersPar, for your personal score (par for the course plus handi-

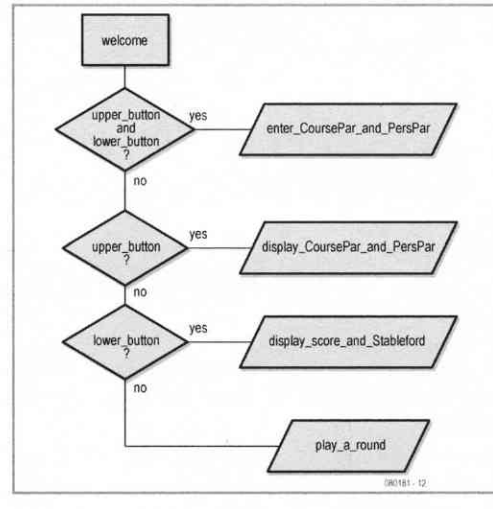

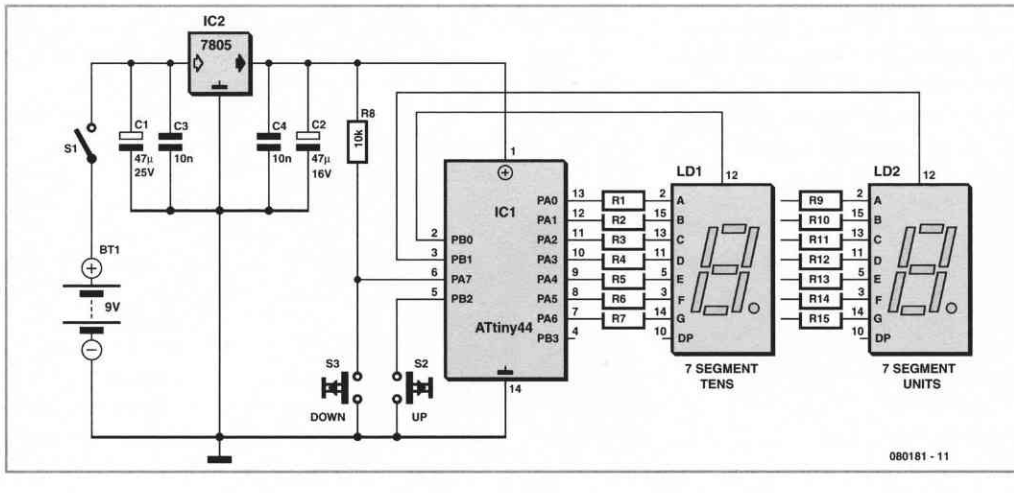

cap) and Score for the current total of strokes during the round. Since people play mainly at the same course and their handicap alters seldom (unfortunately far too seldom), the first two variables do not need to be entered into the EEPROM very often. Program source code and hexfile can be downloaded free of charge from *www.elektor.com*.

At the golf course for each round you enter the number of strokes made at each hole and save this as the third array. When you get to the 'debriefing' afterwards at the nineteenth hole you can display the par for the course, your personal score and number of strokes for each hole.

At power-up you need to set the user mode by pressing keys as follows:

1 S1 and S2 pressed:
Enter Par for the Course and Personal Score
2 S1 pressed:
Display Par for the Course and Personal Score
3 S2 pressed:
Display Score (number of strokes) and Stableford points
4 No key pressed:
Play a round – starts automatically, using the same mode as the last round.

The middle decimal point appears when the hole number is displayed; only the upper bar is shown for the CoursePar in the left-hand display with the corresponding Par figure in the right-hand display. When PersPar is shown the middle horizontal bar appears in the left-hand display, whilst the strokes total is indicated by the bottom bar. Stableford points are signified by three horizontal bars in the left-hand display.
The table gives a summary of the modes and the displays. It's a good idea to practise a bit before using the scorekeeper in earnest, if only to avoid irritation on the actual course...

(080181-1)

Inputs and displays

➠ *Input CoursePar and PersPar*
Alternating input (press keys to increase or reduce): Hole/ CoursePar (e.g. 1.1 ¯5)

After 3 seconds next Hole

After the 18th Hole:
Alternating input (press keys to increase or reduce): Hole/PersPar (e.g. 1.3 –7)

After 3 seconds next Hole

➠ *Display CoursePar and PersPar*
Alternating display: Hole/PersPar (e.g.1.1 ¯5)

After the 18th Hole
Alternating display: Hole/PersPar (e.g. 1.3 –7)
Press keys for next/previous hole (in rotation)

➠ *Score and Stableford display*
For each hole
Alternating display: Hole/Score (e.g. 1.1 _5)

After the 18th Hole
Alternating display: Hole/Stableford points (e.g. 1.3 ≡2)

➠ Play a round
Alternating display: Hole/Score (e.g. 1.1 _5)
Press keys to increase/decrease

160 Call Acknowledged!

HOME AND GARDEN

Bart Trepak

This circuit could be used (depending on your circumstances) by a gentleman to summon his butler, a manager his secretary or as in the author's case to call the kids down to dinner without having to shout above the level of the CD player/TV/games console in their bed-

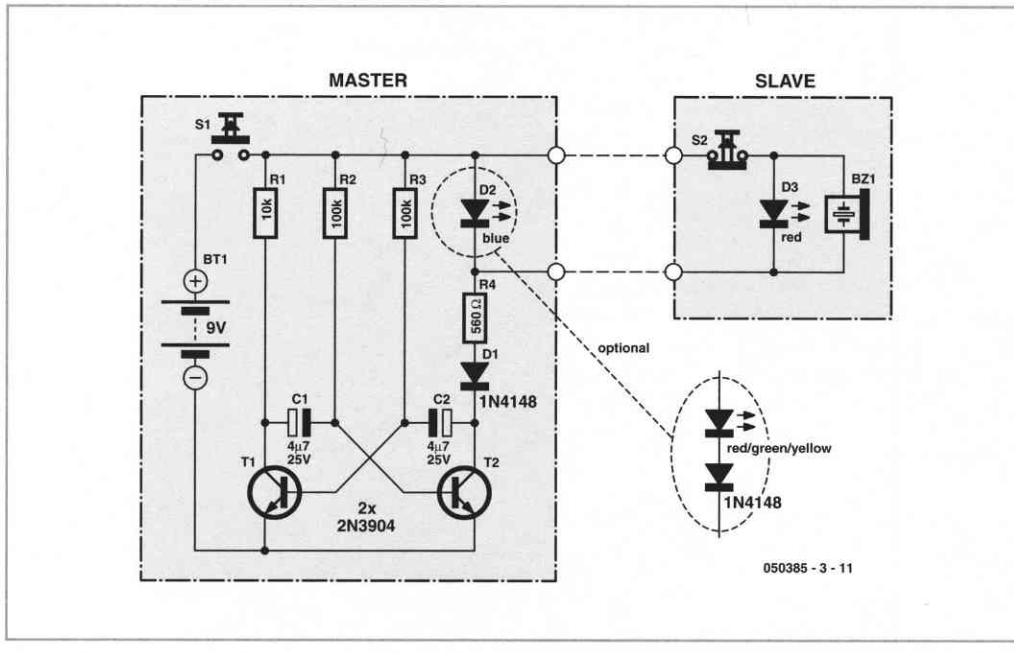

room. Rather than resorting to a full-blown intercom system, a simpler solution was envisaged and while a buzzer could easily fulfil this function, this circuit has the advantage of providing a visual indication of a call as well as confirming to the caller that the 'message' has been received. This is especially useful in the latter case, as the call may be easily drowned out by the music playing in the headphones.

The circuit, which requires no complicated switching, uses a simple two-wire connection between the two stations and utilises the fact that the forward voltage drop of a blue (or white) LED is greater than that of a red, green or yellow one.

The circuit is based on a two-transistor multivibrator which is used to pulse a red LED (D3) as well as the buzzer Bz1 on and off at about 1.5 Hz when push button S1 is closed. This frequency may of course be altered if required by changing the values of the capacitors. The diode D1 in series with the collector of transistor T2 is required to isolate the output from the effects of the buzzer circuitry, which would alter the multivibrator frequency.

In principle, the multivibrator could be dispensed with but a pulsed buzzer/flashing LED is much more noticeable than a continuous signal especially in noisy conditions. Since the voltage across a red LED is typically about 1.5 V while a blue LED requires at least 2.5 V to 3 V to light, the blue LED will remain off when the call button S1 is pressed. Despite being rated for operation at 3-12 V, most piezo sounders can still produce a piercing sound from the pulsed 1.5-V available across the red LED which should get the attention of even the most preoccupied teenager.

When the recipient presses the acknowledge (push to break) switch S2, the red LED/buzzer are disconnected allowing the blue LED to flash at the sending station indicating to the caller that his call has been received. Alternatively, if a blue LED is not available, a red or green type in series with a forward biased silicon diode to raise its forward voltage above that of the red LED in the receiver could be used instead.

The circuit may be powered by a 9-V battery, a mains power supply being unnecessary in view of the low power consumption and infrequency of use of the circuit.

(050385-3)

161 Automatic Range Switching

Rainer Reusch

You can pick up a 3½-digit digital voltmeter module nowadays for a little as a couple quid. This is a simple and expensive way to fit out a piece of equipment with an instrument. Most modules are based on the well-known ICL7106 IC. They operate from an ordinary 9-V battery, and they only provide a fixed measuring range (200 mV or 2 V). The accessory circuit described here converts a DVM module into a voltmeter with 20-V and 200-V measuring ranges, with the added bonus of automatic range switching. This requires a ground-referenced symmetrical supply voltage (±5 V) instead of a battery. An inexpensive TL431C is also used to generate an adjustable reference voltage from the supply voltage. The circuit described here uses an LCD module with a fixed measuring range of 200 mV. It has three pins for driving the decimal point; two of them are used here.

This is how the circuit works: IC1 converts the voltage to be measured by the DVM module

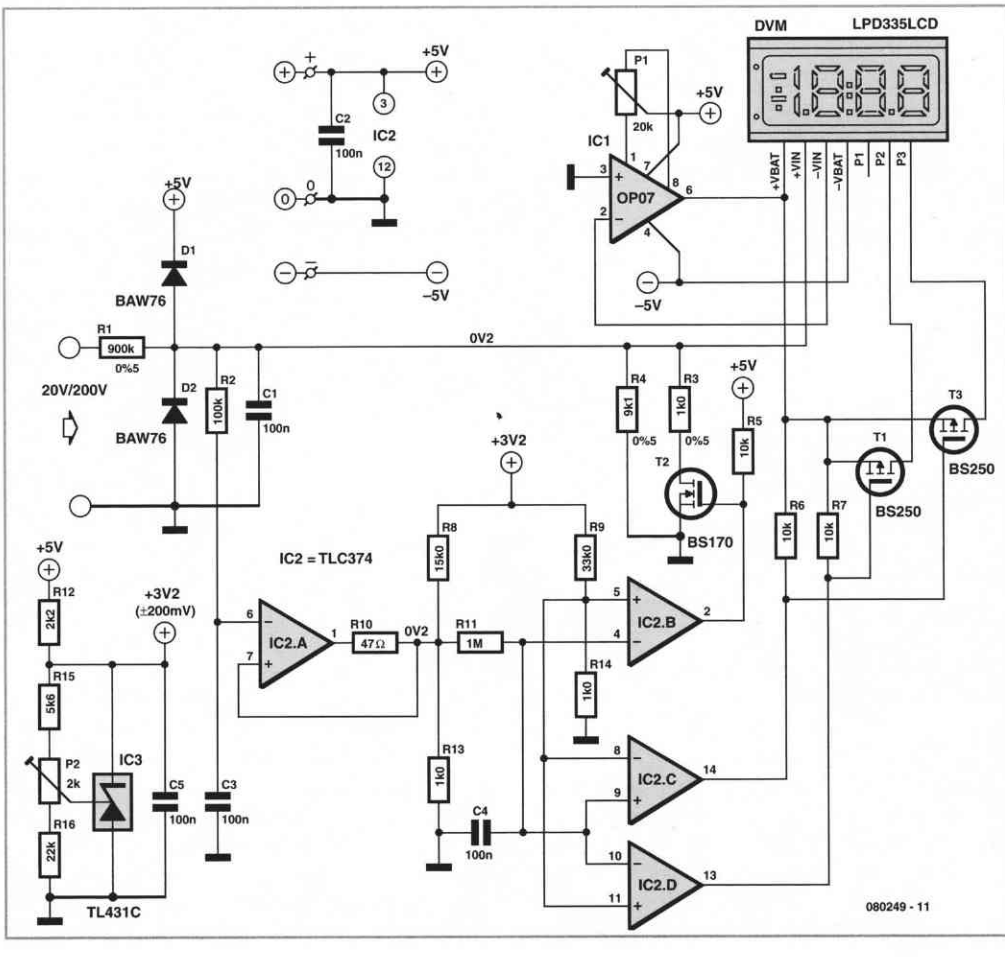

into a ground-referenced voltage. This part of the circuit is based on a design idea from Carsten Weber [1] that was published in the June 2005 issue of *Elektor Electronics*.
If the input voltage is less than 20 V, the voltage divider formed by R1 and R4 reduces it by a factor of 100. Transistor T2 is cut off, so R3 has no effect on the division ratio. The voltage at the junction of voltage divider R8/R13 is 200 mV because the open-collector output of comparator IC2A is in the high-impedance state. If the input voltage rises above 20 V, IC2A changes state and the voltage at the junction of voltage divider R8/R13 drops to less than 20 mV. In response to this, the output of comparator IC2B goes high and T2 conducts. R3 is now connected in parallel with R4. This yields a division factor of 1000 (200-V range). Of course, the larger division factor also causes the input voltage of IC2A to drop. To prevent this comparator from changing back to its previous state (which would cause the circuit to act like a sort of oscillator), the value of R10 must be chosen such that the voltage at the junction of voltage divider R8/R13 is less than 20 mV, as previously mentioned. The calculated value (with R10 in parallel with R13) is approximately 9.6 mV. In practice, the value is around 18 mV due to the resistance of the output transistor of the comparator. This means that the circuit will switch back to the lower voltage range when the input voltage drops below approximately 18 V. The amount of hysteresis can be set by adjusting the value of R10. However, the circuit will oscillate if the value is too high. Film capacitors C1, C3 and C4 suppress noise and create a certain amount of inertia for range switching. This prevents frequent back-and-forth switching in the threshold region.
The other two comparators of IC2 supply mutually complementary output levels that depend on the measuring range. The associated decimal points of the DVM module are driven via p-channel FETs.

The circuit has two trimpots: P1 is used to correct for the offset voltage of the operational amplifier (IC1), while P2 is used to set the threshold level for range switching. For this purpose, first adjust the trimpot to produce the maximum possible reference voltage (around 3.4 V). Next apply an input voltage that causes a display reading of 19.99 (which ideally means 19.99 V). Now turn P2 until the measuring range switches. As a check, reduce the input voltage to force the measuring range to switch back, and then slowly increase the input voltage again. The ideal setting is reached when the measuring range switches before the DVM module displays an 'overrange' indication.

(080249-1)

Reference
[1] DVM Without Isolation, *Elektor Electronics* June 2005.

162 Automatic Windshield Washer Control

MISCELLANEOUS ELECTRONICS AND DESIGN IDEAS

Christian Tavernier

Most, if not all, recent cars have an impressive amount of electronics, whether it be ABS brake systems, engine control with injection calculators, airbag activation, or other various functions, called comfort functions. Among them is one which we tend to forget because it has become so common today. It turns on the windshield wipers automatically for a few seconds after the windshield cleaner. This practice is almost indispensable because it avoids any dripping of excess rinse product right in the middle of a justcleaned windshield. Unfortunately, many 'low end' cars or some of the older cars are not equipped with this automatic function which is a very nice convenience to have. So, since all that is re-

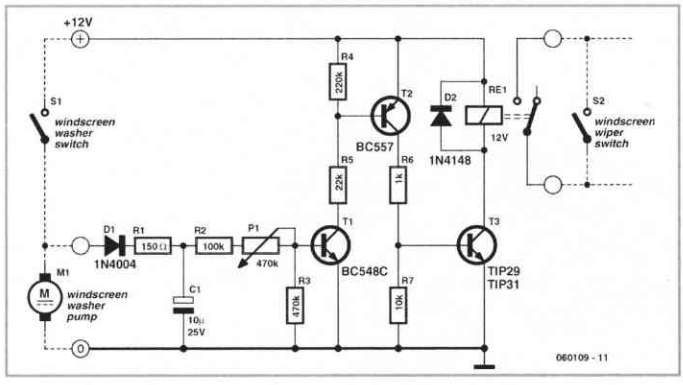

quired is a handful of components that any electronics hobbyist worthy of the name already has in his/her drawer, we will discuss the circuit proposed here.

This project is super simple and simply keeps the windshield wiper activated for a few seconds after the windshield washer control contact has been released.
While the windshield washer pump is operating, the 12 volts delivered by the battery are present at the terminals and are therefore charging capacitor C1. Once the windshield washer has stopped, this capacitor can only discharge through R2, P1, R3, and the T1 emitter-base junction, due to the presence of diode D1.
It thus keeps T1 in the conductive state during a certain time, the exact period of which depends on the setting of P1. T1 in turn saturates T2, which then does the same for T3. The Re1 relay is therefore connected which maintains the windshield wiper in operation because its work contact is wired in parallel to the control switch. Once C1 is sufficiently discharged, T1 is blocked, which then blocks T2 and T3 and deactivates relay Re1.
The type of components is not really critical, even if we indicate specific reference numbers for T3, any low-power npn transistor with a gain over 25 will work. However, considering the amount of power consumed by the windshield wiper motor, relay Re1 will imperatively be an 'automobile' relay. You can find very low-priced ones at many car accessory shops (and even at some component retailers). These relays maintain contact under 12 volts and often do not have more than one work contact but they are, in general, capable of cutting off about 20 amps.
Finally, the only delicate point of this project is to properly identify the control wire for the windshield pump on one hand, and the windshield wiper motor on the other. Observing what is happening at the various connections with a simple voltmeter, should get it right without too much difficulty.

www.tavernier-c.com (060109-1)

163 Cheap 12 V / 230 V Invertor

POWER SUPPLIES, BATTERIES AND CHARGERS

B. Broussas

Even though today's electrical appliances are increasingly often self-powered, especially the portable ones you carry around when camping or holidaying in summer, you do still sometimes need a source of 230 V_{AC} – and while we're about it, why not at a frequency close to that of the mains?

As long as the power required from such a source remains relatively low – here we've chosen 30 VA – it's very easy to build an invertor with simple, cheap components that many electronics hobbyists may even already have. Though it is possible to build a more powerful circuit, the complexity caused by the very heavy currents to be handled on the low-voltage side leads to circuits that would be out of

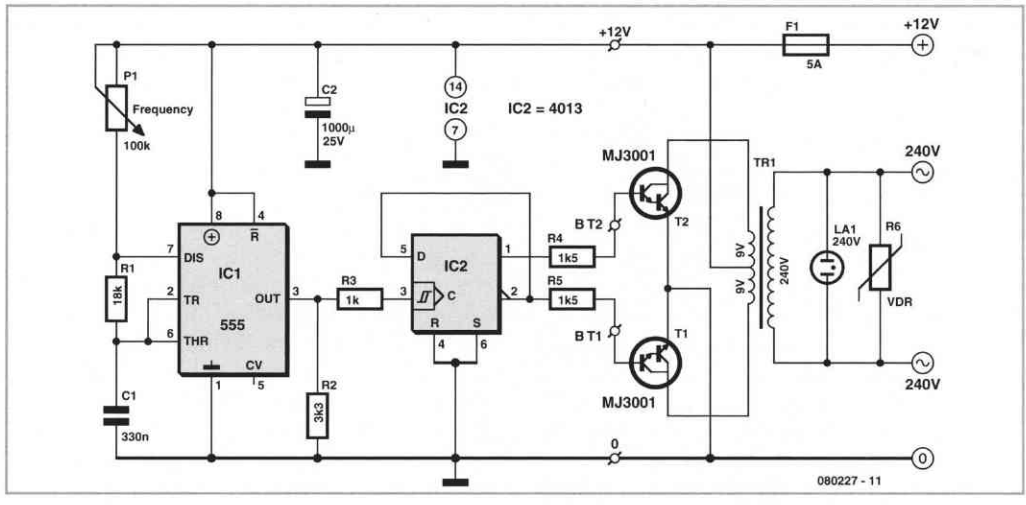

place in this summer issue. Let's not forget, for example, that just to get a meagre 1 amp at 230 V_{AC}, the battery primary side would have to handle more than 20 A_{DC}!

The circuit duiagram of our project is easy to follow. A classic 555 timer chip, identified as IC1, is configured as an astable multivibrator at a frequency close to 100 Hz, which can be adjusted accurately by means of potentiometer P1. As the mark/space ratio (duty factor) of the 555 output is a long way from being 1:1 (50%), it is used to drive a D-type flip-flop produced using a CMOS type 4013 IC. This produces perfect complementary squarewave signals (i.e. in antiphase) on its Q and Q outputs suitable for driving the output power transistors.

As the output current available from the CMOS 4013 is very small, Darlington power transistors are used to arrive at the necessary output current. We have chosen MJ3001s from the now defunct Motorola (only as a semi-conductor manufacturer, of course!) which are cheap and readily available, but any equivalent power Darlington could be used.

These drive a 230 V to 2×9 V centre-tapped transformer used 'backwards' to produce the 230 V output.

The presence of the 230 V_{AC} voltage is indicated by a neon light, while a VDR (voltage de-

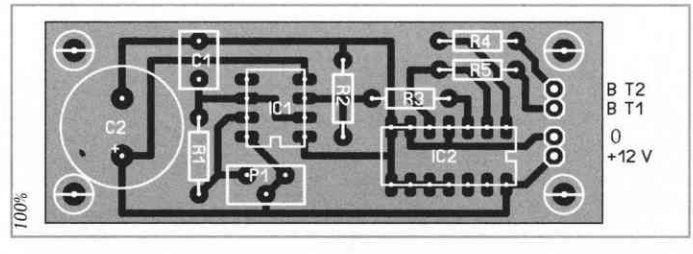

COMPONENTS LIST

Resistors
R1 = 18 kΩ
R2 = 3kΩ3
R3 = 1 kΩ
R4, R5 = 1kΩ5
R6 = VDR S10K250 (or S07K250)
P1 = 100 k potentiometer

Capacitors
C1 = 330 nF
C2 = 1000 µF 25V

Semiconductors
T1, T2 = MJ3001
IC1 = 555
IC2 = 4013

Miscellaneous
LA1 = neon light 230 V
F1 = fuse, 5A
TR1 = mains transformer, 2x9V 40VA (see text)
PCB, ref. 080227-1 from *www.thepcbshop.com*

pendent resistor) type S10K250 or S07K250 clips off the spikes and surges that may appear at the transistor switching points.

The output signal this circuit produces is approximately a squarewave; only approximately, since it is somewhat distorted by passing through the transformer. Fortunately, it is suitable for the majority of electrical devices it is capable of supplying, whether they be light bulbs, small motors, or power supplies for electronic devices.
Note that, even though the circuit is intended and designed for powering by a car battery, i.e. from 12 V, the transformer is specified with a 9 V primary. But at full power you need to allow for a voltage drop of around 3 V between the collector and emitter of the power transistors. This relatively high saturation voltage is in fact a 'shortcoming' common to all devices in Darlington configuration, which actually consists of two transistors in one case.

We're suggesting a PCB design to make it easy to construct this project; as the component overlay shows, the PCB only carries the low-power, low-voltage components.

The Darlington transistors should be fitted onto a finned anodized aluminium heatsink using the standard insulating accessories of mica washers and shouldered washers, as their collectors are connected to the metal cans and would otherwise be short-circuited.
An output power of 30 VA implies a current consumption of the order of 3 A from the 12 V battery at the 'primary side'. So the wires connecting the collectors of the MJ3001s [1] T1 and T2 to the transformer primary, the emitters of T1 and T2 to the battery negative terminal, and the battery positive terminal to the transformer primary will need to have a minimum crosssectional area of 2 mm^2 so as to minimize voltage drop.
The transformer can be any 230 V to 2×9 V type, with an E/I iron core or toroidal, rated at around 40 VA.

Properly constructed on the board shown here, the circuit should work at once, the only adjustment being to set the output to a frequency of 50 Hz with P1. You should keep in minds that the frequency stability of the 555 is fairly poor by today's standards, so you shouldn't rely on it to drive your radio-alarm correctly – but is such a device very useful or indeed desirable to have on holiday anyway? Watch out too for the fact that the output voltage of this invertor is just as dangerous as the mains from your domestic power sockets. So you need to apply just the same safety rules! Also, the project should be enclosed in a sturdy ABS or diecast so no parts can be touched while in operation.
The circuit should not be too difficult to adapt to other mains voltages or frequencies, for example 110 V, 115 V or 127 V, 60 Hz. The AC voltage requires a transformer with a different primary voltage (which here becomes the secondary), and the frequency, some adjusting of P1 and possibly minor changes to the values of timing components R1 and C1 on the 555.

(080227-I)

Web Links
[1] MJ3001
www.st.com/stonline/products/literature/ds/5080.pdf

Downloads
The PCB pattern is available for free download from our website *www.elektor.com*, file # 0080227-1.zip.

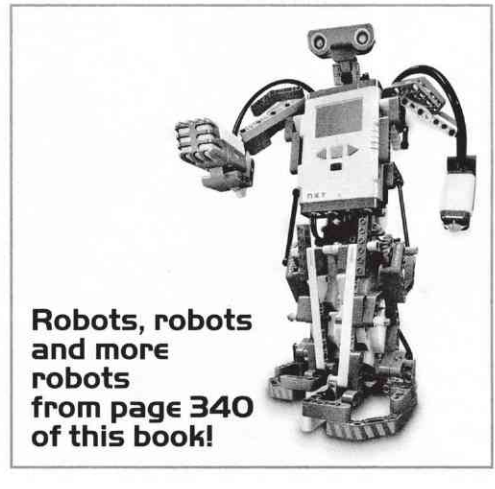

164 USB Switch for Printers

COMPUTERS AND INTERNET

Liam Maskey

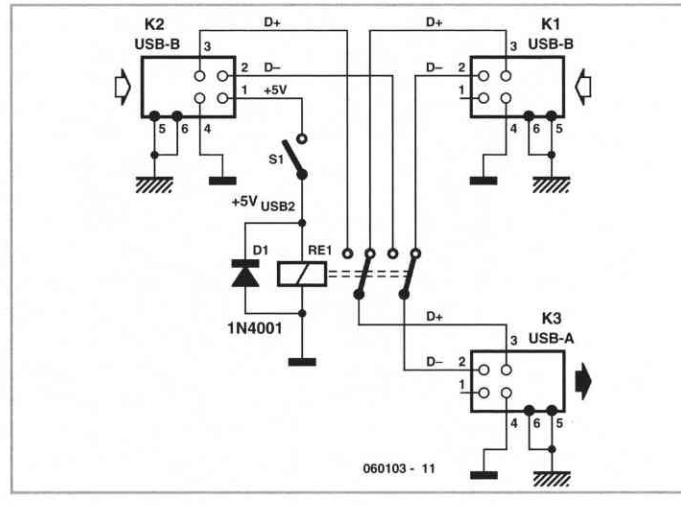

This circuit switches a printer's USB connection from a PC to a laptop. What was needed was a method of allowing a laptop to use the printer occasionally while at all other times the printer would be connected to the PC. Instead of unplugging the printer from the PC and then into the laptop, the circuit switches the USB connection automatically.

K1 and K2 are standard type-B USB sockets, while K3 is a USB type-A socket. The USB lead from the laptop plugs into K2 while the PC's USB lead plugs into K1. A USB cable from K3 connects the printer to this circuit. The cable from the PC is always plugged in while the cable from the laptop is only connected whenever this device needs to print.

In normal operation the laptop is not connected to K2, so the USB signal to the printer comes from the PC via K1, the normally closed contacts of relay Re1, through to K3 and from there to the printer. Whenever the laptop is connected up, the presence of the 5-volt power signal on its USB port causes Re1 to switch over to the printer's connection to K2 and the laptop. Unplugging the laptop returns control of the printer back to the PC.

The circuit was tested on a USB-1.1 compliant printer and a PC and laptop that had USB-2.0 highspeed ports. The PCB traces for D+ and D– should be kept as short as possible and ideally should be the same length. The relay should be a low-power type (5 V at < 100 mA coil current) with two changeover (c/o) contacts.

Switch S1 is only required in situations where the two computers you want to select between are permanently present and connected up to the circuit. The switch then selects the computer having access to the printer.

(060103-1)

165 LiPo Manager

POWER SUPPLIES, BATTERIES AND CHARGERS

Andreas Graff

This circuit performs a managerial role for a three-cell Lithium-Polymer ('LiPo') rechargeable power pack used in a model aircraft. It monitors the voltage of each cell during discharge and cuts power to the motor when any cell dips below a voltage threshold. The R/C

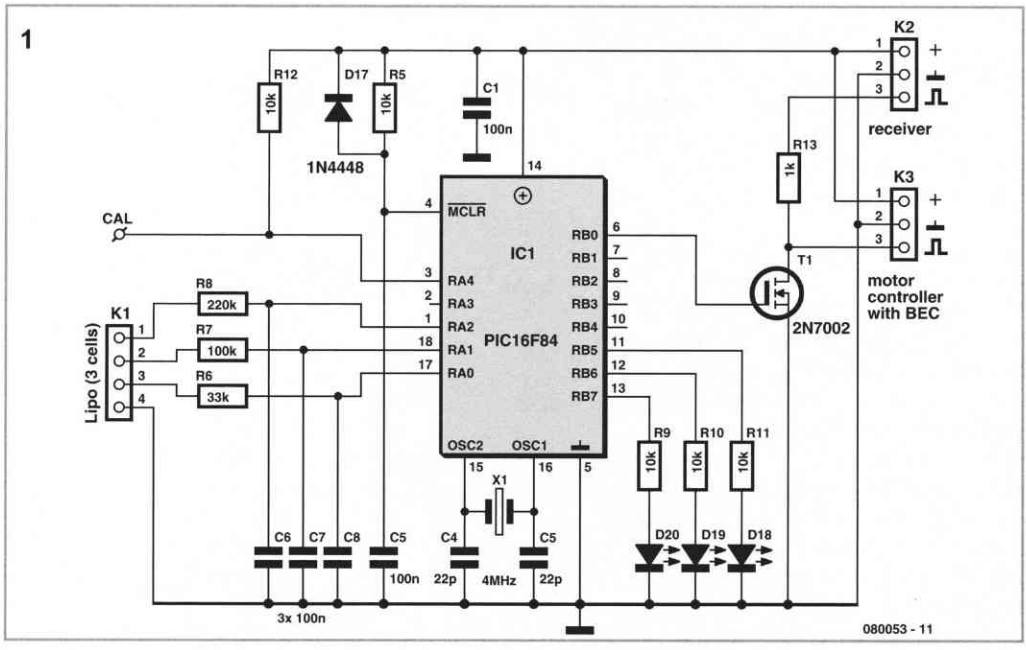

receiver is also powered from this battery via a Battery Elimination Circuit (BEC) but it remains operational so that the pilot remains in control and can safely glide the aircraft in to land. LEDs indicate which of the three cells caused the power to be cut. The circuit resets once power is turned off and on again.

The circuit shown in **Figure 1** measures the three voltage levels without the use of any dedicated hardware A/D converter. The A/D conversion is achieved by applying a voltage to an RC network and measuring the time it takes for the voltage to reach a threshold level (a digital '1'). For this application the technique has a number of advantages: the RC network is a low pass filter which removes any spikes and noise from the measured voltage and the hardware required is small, light and inexpensive.

Before measurement all ports are set to O/ P and low so that the capacitors discharge. The ports are now configured as inputs and a timer measures how long it takes the three voltages to reach the threshold (see **Figure 2**). It is a simple job to calibrate the circuit so it is not necessary to define absolute values for

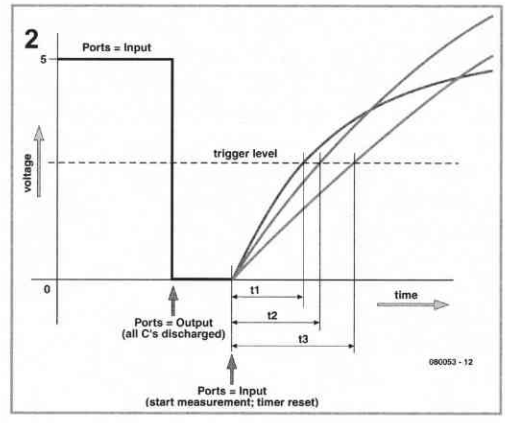

the trigger points. Only the low-to-high time is measured so it is not necessary to take into account any hysteresis levels. The aircraft is only flown within a fairly limited temperature range so it is valid to assume that small variations in the characteristics due to temperature changes can be ignored.

The time constants for all three inputs are chosen so that the time taken for the three voltages to pass the threshold is roughly of the same order of magnitude. The measurements are made on the steep rising edge of

the exponential so the measurement sensitivity for all three levels is about the same (see **Figure 3**).

Measurement at the 6 V and 9 V tap must take into account the readings from the cell(s) below so that it can be determined which cell was guilty of triggering the shutdown. The result is shown on one of three LEDs.

The Microchip PIC P16F84 controller incorporates protection diodes on its inputs. The high values of the RC networks series resistors ensure there are no problems of latch-up with inputs of 6 V and 9 V.

During program debugging a serial interface (9600,8,n,1) was implemented in software (TxData on RB3, RxData on RB4), there is more than enough memory space in the controller so the routine has been left in the program. The routine outputs the (8–bit) decimal value of the actual measurement for channel 1, channel 2 and channel 3. The controller watchdog is enabled to ensure reliable operation.
All the source and hex files for this project are available to download free of charge from the Elektor website at www.elektor.com; the archive number is 080053-11.zip.
To calibrate the circuit it is necessary to short the CAL pin to ground during power up. All three LEDs will light to indicate that it is in calibration mode. All LEDs now extinguish when CAL is released and calibration proceeds as follows:

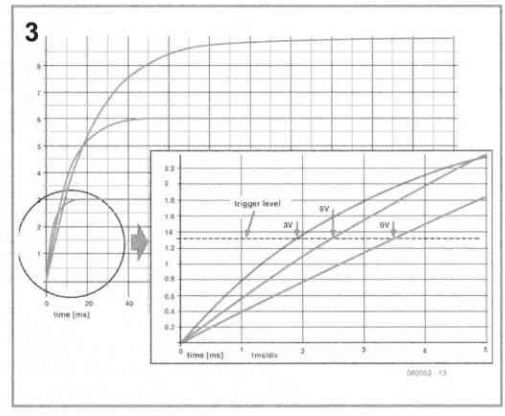

- LED for Channel 1 (D18) lights. Connect the output of a power supply to channel 1 (pin 3 of K1) and adjust the DC output to the correct level for one cell (2.9 V) then momentarily ground the CAL pin.
- LED for Channel 2 (D19) lights. Connect the output of a power supply to channel 2 (pin 2 of K1) and adjust the DC output to the correct level for two cells (5.8 V) then momentarily ground the CAL pin.
- LED for Channel 3 (D20) lights. Connect the output of a power supply to channel 3 (pin 1 of K1) and adjust the DC output to the correct level for three cells (8.7 V) then momentarily ground the CAL pin.

The LiPo manager is now in normal operational mode and ready to go.

(080053-I)

166 Design for Märklin Light Signals

HOBBY AND MODELLING

Nils Körber

Märklin's light signal Type 74391 (blocking signal) for size HO model railway sets is fairly new and, at 10 euros (£7·00), reasonably affordable. There is, however, a little problem in that its operation requires the use of signal keyboard Type 72750, which makes the setup not only more expensive but also inflexible. There is, fortunately, another solution, simpler and much more economical, which requires just a switch and two diodes. It is based on the fact that, seen from en electronics point of view, the light signal consists of

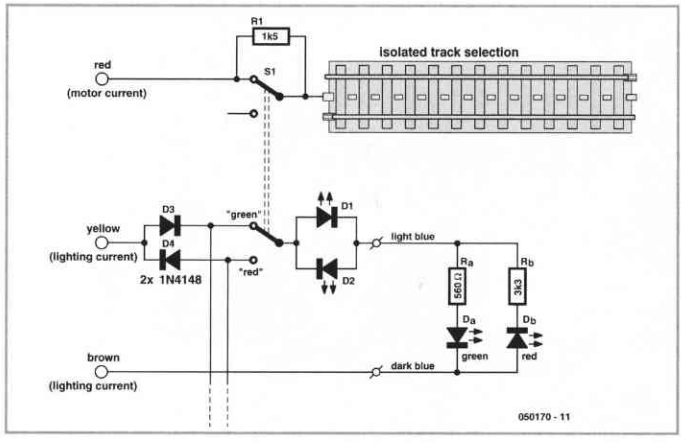

two anti-parallel-connected LEDs with dropping resistors.

The lower section at the right of the diagram, Da, Db, Ra and Rb represents the typical inner circuit of such a light signal. When the output voltage of the light power source is applied to the circuit, both LEDs light. However, since only a red or green signal is wanted, the voltage is simply applied via diodes D3 and D4. Change-over switch S1 then determines which colour will be seen. Surely a very economical solution.

If in more complex setups it is required to have direct control over which colour the light signal on the track is to be, it suffices to add two further anti-parallel-connected LEDs, D1 and D2, in the connection between switch S1 and the light signal.

So far, so good. But now for a few special aspects. Typically, a light signal contains a standard green LED, whereas the red LED is usually a low-current type. Therefore, the dropping resistors have different values. In the present circuit it is therefore necessary for D2 also to be a low-current type. Unfortunately, recent Märklin light signals are already fitted with two low-current LEDs. This can be ascertained by temporarily connecting the present circuit to the light signal and measuring the direct current for the two switch positions. Standard LEDs draw more than 10 mA, whereas low-current types draw not more than 5 mA.

If D3 and D4 are Type 1N4148, it is possible to use the circuit with about five light signals fitted with standard LEDs or with up to twenty fitted with low-current LEDs. If Types 1N4001 are used, up to 1 A can be drawn.

With railway tracks for analogue operation, which normally use 16 V AC power sources, Märklin light signals may be connected directly or via D1/D2. In case of digital tracks that use higher supply voltages, correspondingly higher-value dropping resistors (or an additional one in series with D1 and D2) must be used.

Finally, a tip that is as simple as it is practical. To retain the superb facility of analogue tracks whereby the train does not drive on when the signal is red, but stops automatically, isolate the power line to the last rail before the light signal and power this rail via the second contact of S1 — as already shown in the circuit diagram.

Many other hints and advice for model railway enthusiasts may be found on the author's web site: *www.koerber-home.de*.

(050170-1)

167 Simulation Applets

COMPUTERS AND INTERNET

Simulation programs for analogue circuits come in all shapes and sizes, and at various prices. It is often much easier to test a circuit on a PC instead of reaching for the soldering iron. The website of Paul Falstad contains a free Java applet that illustrates how various

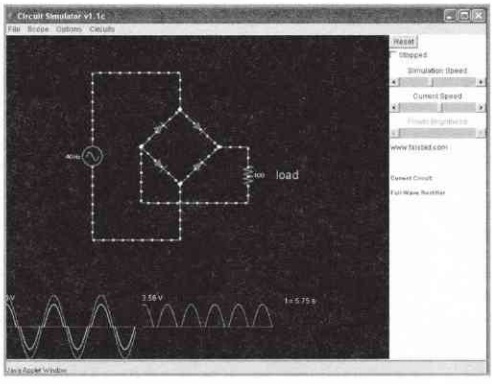

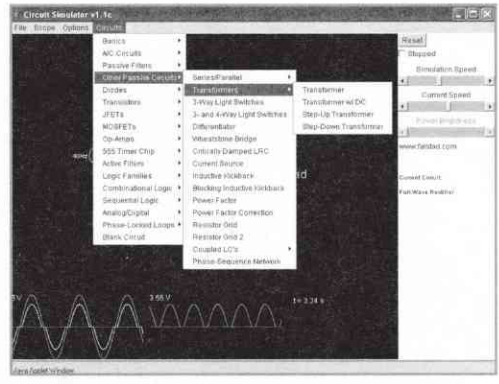

basic analogue and digital circuits work. Voltages and currents can be brought to life in simulated scope screens; circuits can be modified by the ddition, removal or alteration of components.

Unfortunately, the addition of components as not (yet?) been fully implemented in the program: you'll see the dded component appear in the circuit iagram, but it won't have any effect in he operation of the circuit.

But don't let that spoil your fun. Its usefulness is increased by the addition of a large ibrary of example circuits, which makes his applet educational as well. Each simulation is accompanied by a short escription.

The simulations aren't limited to just electronics; other subjects such as physics and mathematics have also been extensively covered. There's more than enough on this website to keep you happily occupied for a few hours...

(060196-1)

Web Link
www.falstad.com/mathphysics.html
The electronics simulation can be found under Electrodynamics/Analog Circuit Simulator Applet

168 Low Loss Step Down Conyerter

POWER SUPPLIES, BATTERIES AND CHARGERS

Michel Franke

This circuit arose from the need of the author to provide a 5 V output from the 24 V battery of a solar powered generator. Although solar power is essentially free it is important not to be wasteful especially for small installations; if the battery runs flat at midnight you've got a long wait before the sun comes up again. The basic requirement was to make an efficient step-down converter to power low voltage equipment; the final design shown here accepts a wide input voltage from 9 to 60 V with an output current of 500 mA. The efficiency is very good even with a load of 1 mA the design is still better than a standard linear regulator. The low quiescent current (200 μA) also plays a part in reducing losses.

Some of the components specified (particularly the power MOSFET) are not the most economical on the market but they have been deliberately selected with efficiency in mind. When power is applied to the circuit a reference voltage is produced on one side of R2. D1 connects this to the supply (pin 7) of IC1 to provide power at start-up. Once the circuit begins switching and the output voltage rises

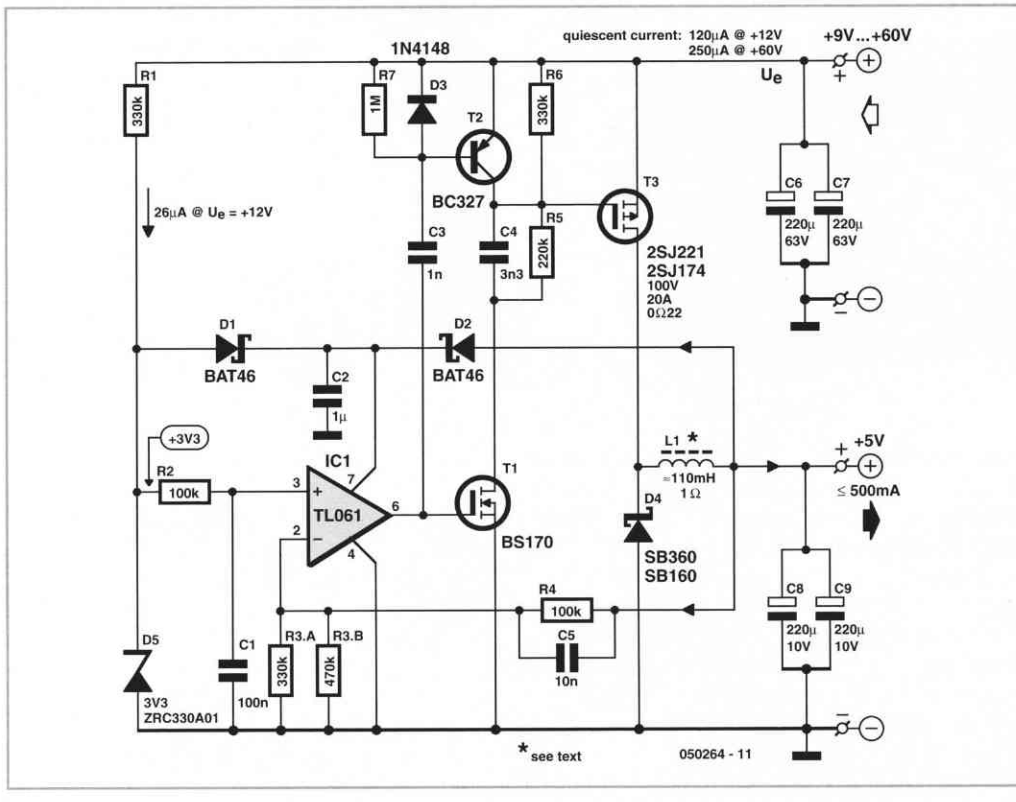

to 5 V, D2 becomes forward biased and powers the IC from the output. Diode D1 becomes reverse biased reducing current through R1. When the circuit is first powered up the voltage on pin 2 of IC1 is below the reference voltage on pin 3, this produces a high level on output pin 6. The low power MOSFET T1 is switched on which in turn switches the power MOSFET T3 via R5 and the speed-up capacitor C4, the output voltage starts to rise.

When the output approaches 5 V the voltage fed back to the inverting input of IC1 becomes positive with respect to the non inverting input (reference) and switches the output of IC1 low. T1 and T3 now switch off and C3 transfers this negative going edge to the base of T2 which conducts and effectively shorts out the gate capacitance of T3 thereby improving its switch off time.
The switching frequency is not governed by a fixed clock signal but instead by the load current; with no load attached the circuit oscillates at about 40 Hz while at 500 mA it runs at approximately 5 kHz. The variable clock rate dictates that the output inductor L1 needs to have the relatively high value of 100 mH.

The coil can be wound on ferrite core material with a high AL value to allow the smallest number of turns and produce the lowest possible resistance. Ready-made coils of this value often have a resistance greater than 1 Ω and these would only be suitable for an output load current of less than 100 mA.

The voltage divider ratio formed by R4 and R3 sets the output voltage and these values can be changed if a different output voltage is required. The output voltage must be a minimum of 1 V below the input voltage and the output has a minimum value of 4 V because of the supply to IC1.
A maximum efficiency of around 90 % was achieved with this circuit using an input volt-

age between 9 and 15 V and supplying a current greater than 5 mA, even with an input voltage of 30 V the circuit efficiency was around 80 %. If the circuit is used with a relatively low input voltage efficiency gains can be made by replacing D4 with a similar device with a lower reverse breakdown voltage rating, these devices tend to have a smaller forward voltage drop which reduces losses in the diode at high currents. At higher input voltage levels the value of resistor R1 can be increased proportionally to reduce the quiescent current even further.

(050264-1)

169 Toothbrush Timer

HOME AND GARDEN

Friedrich Weigand

It has been known since Einstein that time is relative. This seems to apply particularly to children, who can make seconds and minutes seem like days and years when faced with unpopular chores like cleaning their teeth. To get the little dears to spend the three minutes recommended by experts on their teeth, parents concerned for the dental health of their children can resort to electronic means. And so much the better if you can get your children to help out with building the device!

The circuit of the toothbrush timer (**Figure 1**) uses the familiar Atmel RISC AT90S2313 microcontroller, together with an oscillator formed by X1, C1 and C2.

The microcontroller is available ready-programmed (order code 050146-41). It drives a row of LEDs. Green LED D1 flashes every second. The green ten-second

1

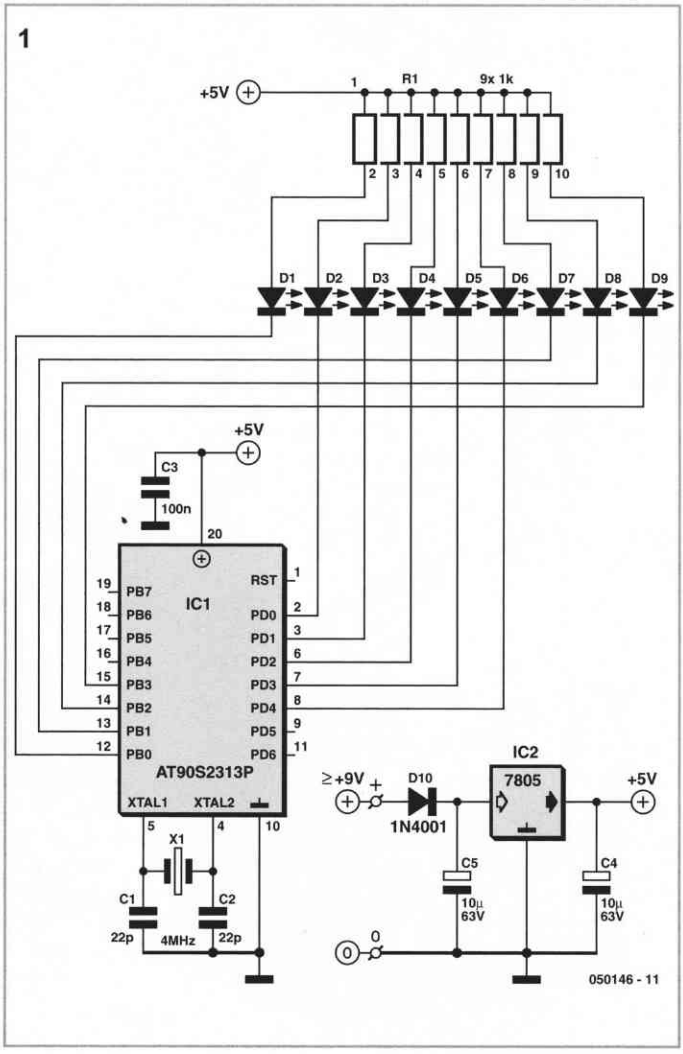

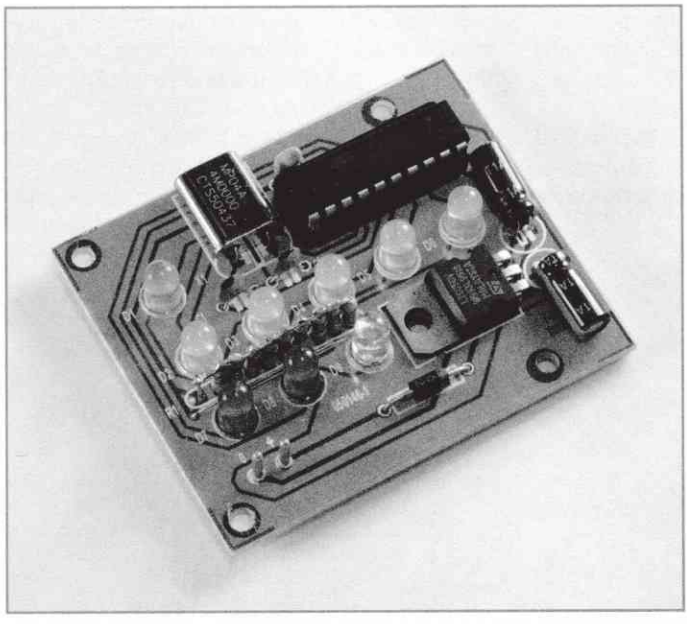

LEDs and the red one-minute LEDs light in sequence and remain on until three minutes have elapsed. Then all the LEDs go out and the blue 'finished' LED D9 starts flashing every second, indicating the end of brushing time.

The port currents are limited to 2 mA to 3 mA by the array of 1 kΩ resistors: this is enough for the low-current LEDs, which are used in order to ensure a long battery life. A 5 V fixed voltage regulator (IC2) and decoupling and smoothing capacitors C3 to C5 round off the circuit. Diode D10 prevents

COMPONENTS LIST

Resistors
R1 = 9-way 1kΩ SIL array

Capacitors
C1, C2 = 22 pF
C3 = 100 nF
C4, C5 = 10 μF, 63V, radial

Semiconductors
D1 = LED, green, low current, 5mm
D2-D6 = LED, yellow, low current, 5mm
D7,D8 = LED, red, low current, 5mm
D9 = LED, blue, 5mm
D10 = 1N4001
IC1 = AT90S2313-10PC (programmed, order code 050146-41)
IC2 = 7805

Miscellaneous
X1 = 4 MHz quartz crystal
Case: e.g. Bopla type BOS 503
1 wire link
PCB, order code 050146-1

2a

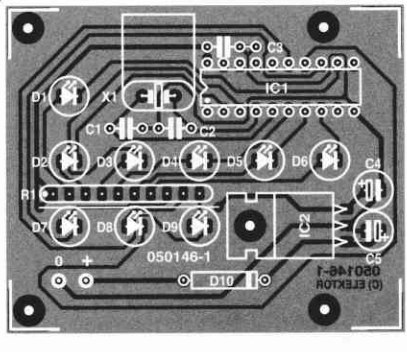

85%

2b

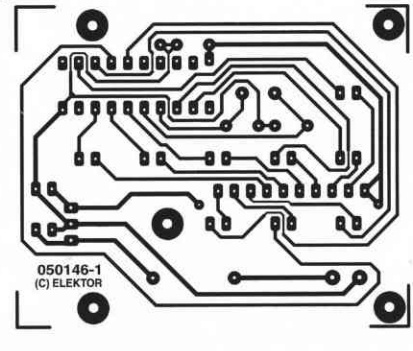

85%

damage should the 9 V PP3 (6F22) type battery be accidentally connected the wrong way around.

The whole circuit can be built on the printed circuit board shown in Figure 2. There are a few wire links near to the resistor array. The voltage regulator, crystal, C4 and C5 are mounted flat on the board to allow the LEDs to stand above the other components and poke through holes in the enclosure.

A socket should be used for the microcontroller. Almost all the components are polarity-sensitive: check carefully before you solder!

(050146)

170 Servo Control

HOBBY AND MODELLING

G. Baars

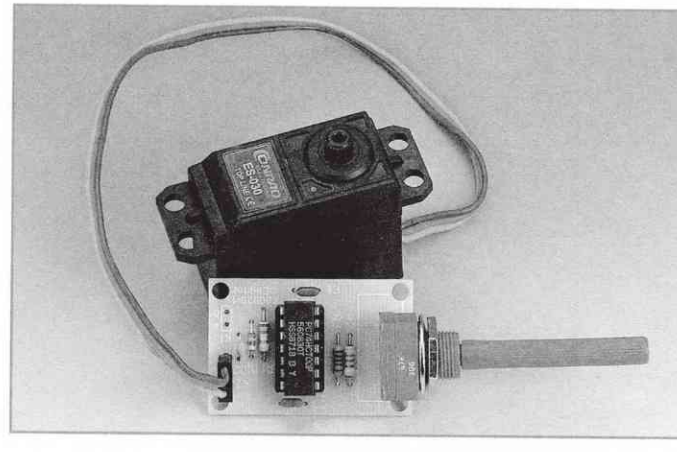

This circuit lets you control a servo in a simple way. It is built around a cheap and common logic IC. Together with a few resistors, capacitors and a diode this circuit can certainly be called simple and can be built on a small circuit board.

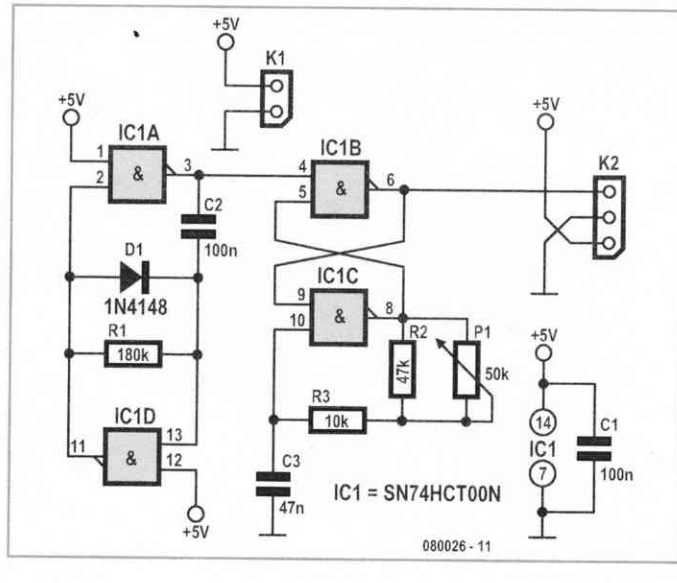

NAND gates IC1A and IC1D are used to build an oscillator which produces negative pulses with a repetition frequency of about 50 Hz. These very narrow pulses are used to toggle the output of the SR (set/reset) flip-flop, which is built with gates IC.1B and IC.1C, every 20 ms. With every set-pulse the output of IC1C goes low, which causes C3 to be discharged via P1, after which the situation reverses. This results in a pulse at the output of IC1B, which repeats every 20 ms and the duration of which can be adjusted with P1.

From experimenting with this circuit and an S3003

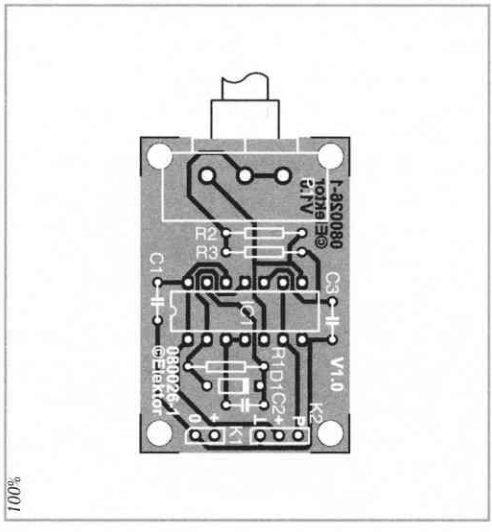

COMPONENTS LIST

Resistors:
R1 = 180 kΩ
R2 = 47 kΩ
R3 = 10 kΩ
P1 = 50 kΩ linear potentiometer

Capacitors
C1, C2 = 100 nF
C3 = 47 nF

Semiconductors
D1 = 1N4148
IC1 = 74HCT00

Miscellaneous
K1 = 2-way SIL pinheader
K2 = 3-way SIL pinheader

servo from Futaba it was observed that with a pulse duration of 1–2 ms it rotated through an angle of 90 degrees. However, by shortening the pulse duration a little more, to about 0.6 ms, there was a further 30 degrees of rotation.

The component values in the circuit were chosen so that the pulse duration can be set from 0.6 to 2 ms with P1 and the total rotation amounts to about 120 degrees. Since the S3003 servo has a not inconsiderable torque of 4 kg · cm, at can be used, for example, to remote control the tuning capacitor of a so-called 'magnetic-loop' RF antenna.
The current consumption of the servo depends on the torque that needs to be delivered and varies from a few tens to several hundreds of milliamps.

(080026-I)

171 Battery Saver

POWER SUPPLIES, BATTERIES AND CHARGERS

This circuit performs a similar function to the 'sleep' button on a radio alarm clock; pressing the button connects the battery supply to some external equipment or circuit (represented by RL) for a preset time period. The period can be extended by pressing the button again before 'time out'. The circuit will avoid the situation where you forget to turn off some battery powered equipment and return to find the battery is flat.

Unlike a digital alarm clock sleep function the circuit here is based on a simple analogue timer which uses very few components. Pres-

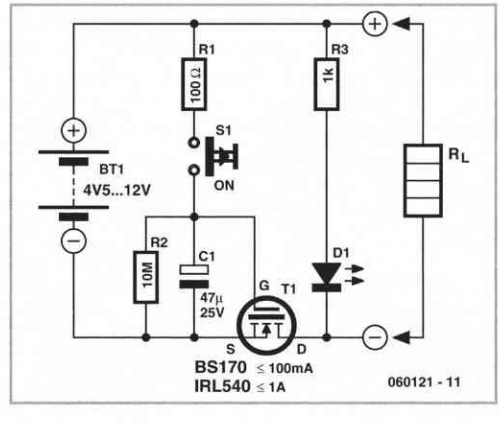

sing button S1 rapidly charges C1 via R1. When the voltage on C1 exceeds the threshold voltage at the gate of FET T1 it conducts and switches the battery to RL. The drain-source voltage drop introduced by the FET is negligible for the two types of FET specified (for a maximum load current of either 100 mA or 1 A).

T1 remains conducting as long as the voltage on C1 is greater than the FET gate threshold voltage (around 2 V for the FET types specified). The length of the 'on' period depends on three factors; firstly the value of R2 which governs the capacitor discharge current, secondly the capacitance of C1 and finally the supply voltage from the battery BT1. When C1 is charged to a higher voltage it takes longer to fall below the threshold level. The component values given will produce an 'on' time of around 10 minutes with a supply of 5 V. The FET turns off relatively slowly at the end of the 'on' period; this should not cause a problem if the switched equipment uses only analogue circuitry but can lead to a momentary malfunction if the equipment contains digital circuitry.

(060121-1)

172 Solar Lamp using the PR4403

POWER SUPPLIES, BATTERIES AND CHARGERS

Burkhard Kainka

The PR4403 is an enhanced cousin of the PR4402 40 mA LED driver. It has an extra input called LS which can be taken low to turn the LED on. This makes it very easy to build an automatic LED lamp using a rechargeable battery and a solar module.

The LS input is connected directly to the solar cell, which allows the module to be used as a light sensor at the same time as it charges the battery via a diode. When darkness falls so does the voltage across the solar module: when it is below a threshold value the PR4403 switches on. During the day the battery is charged and, with the LED off, the driver only draws 100 μA. At night the energy stored in the battery is released into the LED. In contrast to similar designs, here we can make do with a single 1.2 V cell.

The PR4403 is available in an SO-8 package with a lead pitch of 1.27 mm. The other components are a 1N4148 diode (or a Schottky 1N5819) and a 4.7 μH choke.
Pin 2 is the LS enable input, connected directly to the solar module. According to the datasheet, it is possible to connect a series resistor at this point (typ. 1.2 M) to increase the effective threshold voltage. The LED will then turn on slightly earlier in the evening before it is not completely dark.

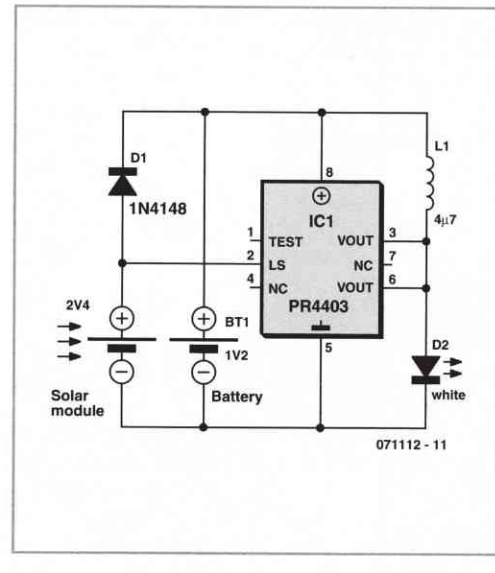

Pins 3 and 6 of the device must be connected together and together form the output of the circuit.

(071112-I)

173 FL Twilight Switch

HOME AND GARDEN

Peter Herlitz

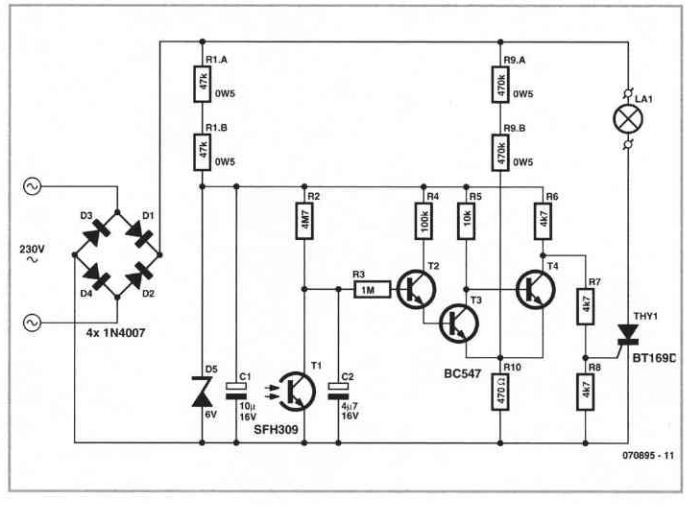

This light dimmer has been especially designed for use with fluorescent lamps (FLs). The circuit contains only a few components and can be built on a circuit board of only 2 by 3 cm if you use SMD components.

The mains voltage is rectified by D1 to D4 and this waveform goes to the in series connected fluorescent lamp and a thyristor. During the day the thyristor will not receive any gate current so that the lamp will remain off. At night the thyristor will receive a continuous gate current so that the fluorescent lamp stays fully on.

The light/dark detection circuit is built around T1 to T4. This part is fed directly from the rectified mains voltage via R1/D5/C1.

Photo transistor T1 measures the amount of ambient light. During the day, when there is sufficient light, T1 conducts. In that case T2 and T3 will block and T4 conducts so that the thyristor does not receive any current.

When dusk falls the voltage across electrolytic capacitor C2 increases. At some point this will become high enough so that T2 and T3 will conduct. T4 will not receive any base current any more and blocks, so that the thyristor will receive continuous gate current via voltage divider R6/R7/R8 and the lamp will light up. R9 and R10 provide for some hysteresis in the switching behaviour of T2 and T3, so that the circuit does not repeatedly turn on and off when dusk falls.

When building the circuit make sure that it is electrically safe, since it is directly connected to the mains voltage.

(070895-I)

174 IR Remote Control Tester

TEST AND MEASUREMENT

Malte Fischer

This small circuit is ideal for checking the basic operation of an infrared remote control unit. The circuit is based on the brilliantly simple idea of connecting a piezo buzzer directly to an IR receiver IC.

This method is almost as simple as connecting a photodiode directly to the input of an

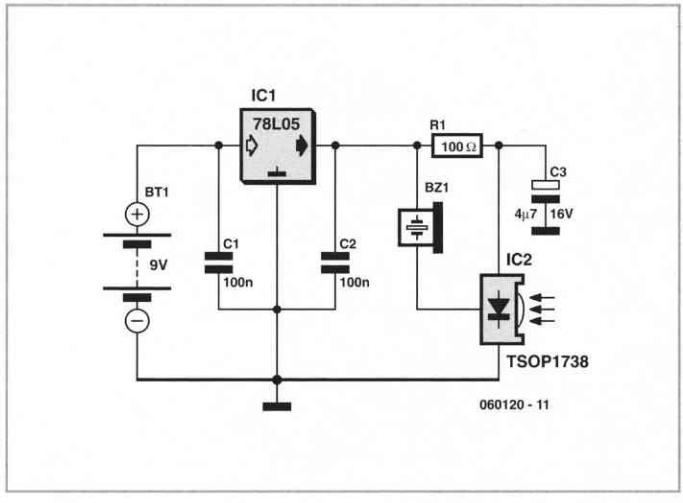

The TSOP1738 integrated IR receiver accepts, amplifies and demodulates the IR signal from the remote control, producing an output with a frequency of around 700 Hz. The piezo buzzer is connected to its output, rendering the signal audible.

All the other components are simply concerned with producing a stable 5 V power supply from the 9 V PP3-(6F22) type battery. Instead of the TSOP1738 similar devices from other manufacturers can be used, and of course carrier frequencies other than 38 kHz can be used. The circuit still works if there is a mismatch between the nominal carrier frequencies of the transmitter and receiver IC, but range is reduced. It is still, however, adequate for determining whether a remote control is producing an IR signal or not.

(060120-1)

oscilloscope, but has the advantage that no oscilloscope is needed: the compact unit is always ready to use and much easier to carry around than bulky test equipment.

Operation of the remote control is indicated by the buzzer making a chattering noise. The circuit is very sensitive and has a range of several metres.

175 Low-Voltage Step Down Converter

POWER SUPPLIES, BATTERIES AND CHARGERS

Steffen Graf

Sometimes you have a situation where you have a 5-V supply voltage but part of the circuit needs a lower supply voltage.

A voltage regulator from the Texas Instruments TPS62000 family [1] is a good choice for this if the current consumption is less than 600 mA.
The essential advantages are:

- small (but still manually solderable) SMD package;

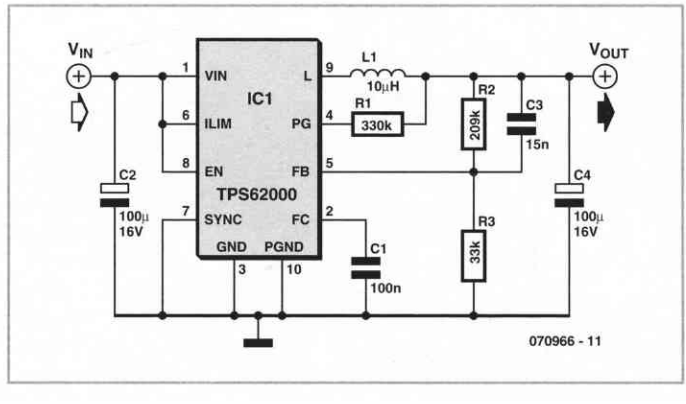

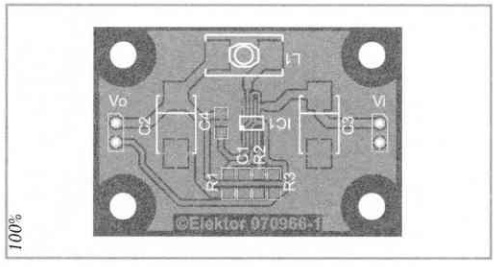

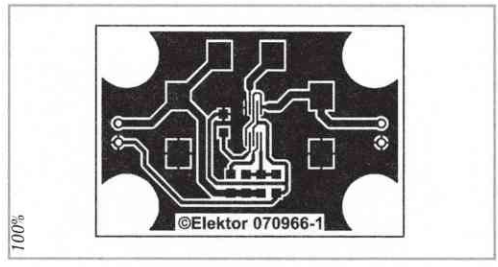

- high operating frequency (750 kHz) → small external inductor;
- integrated power MOSFETs → high efficiency (up to 95 %);
- no external switching diode necessary.

You can thus use this device to build a very compact, highly efficient voltage converter. A sample layout generated by the author is available as a file on the Elektor website.

The TSOP62000 provides an internal reference potential of 0.45 V, which can be used to set the output voltage in the range of 0.5 V to 5 V by means of resistors R2 and R3. The formula for this is:

$$V_{out} = 0.45\,V + 0.45\,V \cdot \frac{R2}{R3}$$

For relatively low voltages, the value of inductor L1 should be 10 μH, but a value of 22 μH is better if the output voltage is 3.3 V or more. The input voltage can be anywhere in the range of 2 V to 5.5 V, and of course it has to be higher than the desired output voltage. The output voltage is 3.3 V with the indicated component values and an input voltage of 5 V.

If you want to reduce the component count even further, you can use a member of the family with a fixed output voltage. The available voltages are 0.9, 1.0, 1.2, 1.5, 1.8, 1.9, 2.5, and 3.3 V. With this approach you can omit R2, R3 and C3, so the output can be connected directly to pin 5.

(070966-1)

Web Link
TPS6200-datasheet:
focus.ti.com/lit/ds/symlink/tps62000.pdf

176 RGB Lights

HOBBY AND MODELLING

Joseph A. Zamnit

The overall effect produced by this project is a glowing sequence of lights changing slowly from one colour to the next. The microcontroller cycles through randomly generated values of red, green and blue hues of light to produce a variety of nice colours.

The software implemented on the controller interpolates from one shade to another, each colour channel being treated independently. Light intensity is controlled by means of pulse width modulation (PWM) for each colour. A high frequency of approximately 60 Hz is used to modify the light intensity and eliminate any flicker that might arise.

One major problem that had to be overcome was unequal brightness of the LEDs used, the result of which is a tendency for one particular colour to dominate in the overall hue produced. It was found that blue LEDs are perceived to have the largest intensity and

green, the lowest. This was compensated for by using a large resistor for blue and a low resistor for green, together with two green diodes in series for higher green colour intensity. The values of the resistors may have to be tweaked to achieve the best balanced colour intensity. A diffused glow was achieved by cutting the lens of the ultra bright LEDs used and using a ping pong ball as a basic diffuser.

This very simple project is perfect for a rainy day and can be built in a couple of hours. Despite its simplicity it will produce a very interesting and glowing effect. Several units may be built and they will mix a variety of colours randomly.

The source and hex code files for the PIC12F675 device are available as free download # 080419-11.zip from the Elektor website. The code was developed using CCS C.

(080419-I)

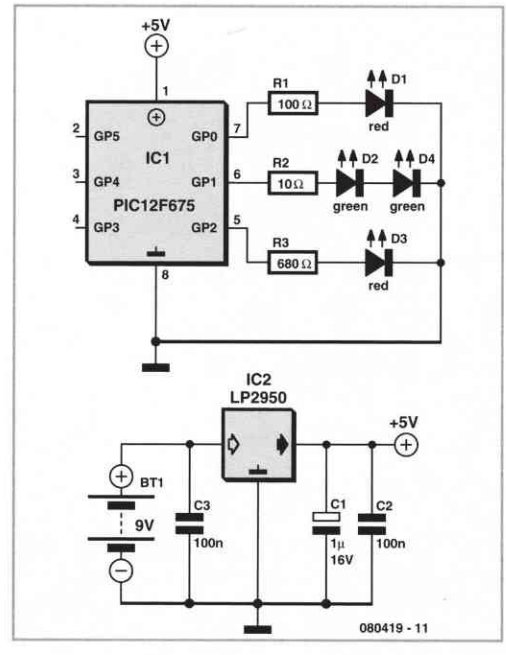

177 84x48-pixel Graphics LCD

MICROCONTROLLERS

for just a few pounds!

Marcel Cremmel

Alphanumeric displays (with *x* lines of *n* characters) are very popular. Reasonably priced, they are rather easy to implement. However, here we are proposing to replace them with a graphics LCD that scores better on a number of aspects:

- it's graphic! (84×48 pixels);
- can be used to display up to 6 lines of 14 characters (8×5 matrix);
- anyone can create his/her own character font;
- easy to drive (5-wire synchronous serial connection);
- superior contrast;
- only consumes 110 µA at 3.3 V;
- can be backlit;

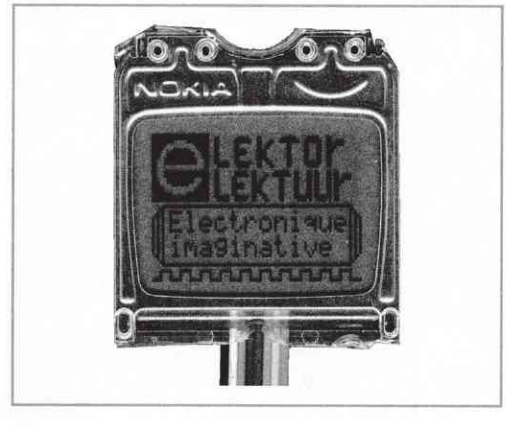

- and what's more it only costs from 2 to 4 pounds, new!

But where can we find this LCD with such an unbeatable price/quality ratio? Actually, we are referring to a part in a widely-distributed

1

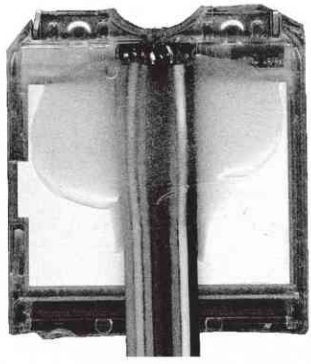

2

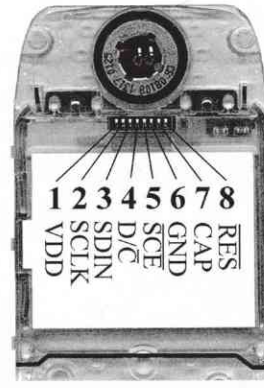

product: the LCD in a Nokia 3310 mobile telephone (the 3410 can also be used, the resolution is then 96×64 pixels). You can find numerous sites on the web which sell this product (new or used) as a one-off or in bulk.

After such praise, what is there to criticise? Any difficulty in implementation is due to the connections.
The connector is composed of gold-plated 'spring' blades (on the LCD) which rest on solder pads (in the telephone) to establish contact. Two DIY solutions are possible:

- we solder an 8-wire ribbon cable to the pads (**Figure 1**). Don't forget, the pitch is 1.14 mm!

- we reproduce the original connection system. Tests have shown excellent reliability with tin-plated solder pads. Interested readers will find artwork for PROTEL software on the Elektor website.

Connector

Do not attempt to extract the display from its plastic casing as the display also includes part

3

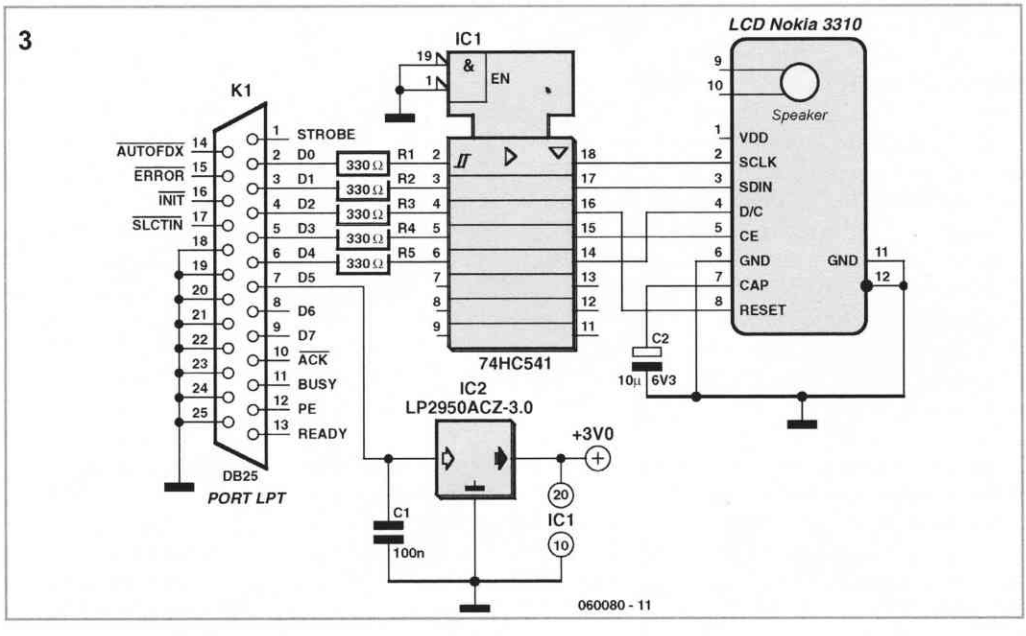

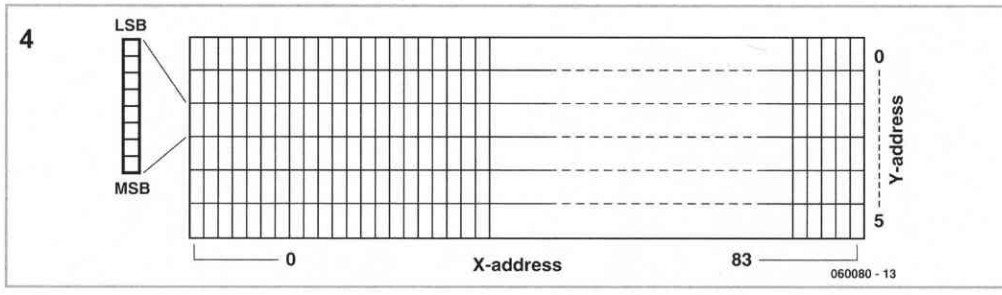

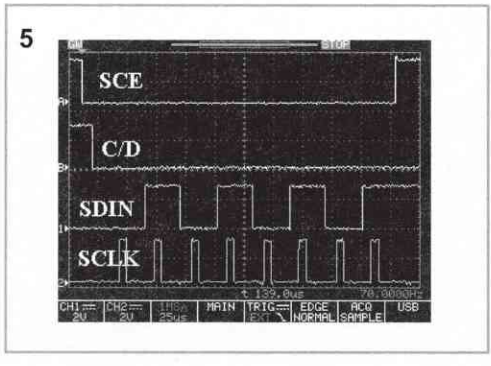



of the telephone keyboard. You can get rid of it with a plastic cutout (the red line on the photo in **Figure 2**). Do not cut out the top part if you are planning to use the original connection system – the securing screws can be used to maintain contact pressure.

Power supply

All you need to do is apply a supply voltage of between 2.7 and 3.3 V to the display. The display has its own the DC-DC converter which produces the required current for the LCD, decoupled by C2 (see diagram in **Figure 3**).

Programming

The LCD uses a controller type PCD8544 from Philips [1]. Full documentation is available on the web. The circuit has a screen memory organised into six lines of 84 bytes, or 504 bytes.

The eight bits of a byte represent the states of eight vertical pixels corresponding to the screen (state 1 = black pixel, see **Figure 4**). In order to display text, for example, the program should 'draw' each letter in the screen memory.

Assigning registers for the PCD8544 configuration and for the 'screen' RAM is carried out by a synchronous serial connection:

- SCE : selection of the circuit (5)
- SDIN : serial input output (3)
- SCLK : synchronous clock (2)
- D/C : given selection/command (4)
- RES : Reset (8)

Figure 5 shows the typical timing diagram for writing a command.

You will find a test program in C on the Elektor website (ref. **060080-11.zip**) that has the most common functions: initialisation, write text (two font sizes) and simple drawing (pixel and straight track). It is written for the MSP430 family in the free IAR environment [2] but is easily adaptable to other microcontrollers because it does not rely on hardware from a specific resource (SPI coupler, among other things).

Furthermore, a program called Test_LCD_Nokia_3310 is available (see **Figure 6**). It runs on the PC and is used to test the display connec-

ted to the parallel port as shown in the diagram in Figure 3.
The installation of this program is simple: copy the executable to any folder and the TVicLPT.sys file to C:\Windows\System32\Drivers.

Available functions:

- free drawing with the mouse;
- text drawing;
- variable speed scrolling in 4 directions;
- saving the drawing.

The low current consumption of the LCD means it can be powered from the printer output port. However, a 3 V regulator and buffer gates have been added to avoid any risk of damaging or overloading the LCD electronics. For example, the LCD does not seem to like voltages applied to logic inputs in the absence of the supply voltage.

(060080-1)

Internet Links

[1] *www.semiconductors.philips.com/products/*
[2] MSP430, 4K KickStart Edition v3.40A on *www.iar.com*

The archive file 'LCD_Nokia' containing all of the files mentioned in this article can be downloaded free of charge from *www.elektor.com*

178 ZigBee-based Wireless Motion Sensor

HOME AND GARDEN

Sven van Vaerenbergh

It's easy to put together a ZigBee wireless system if you use the XBee and XBee Pro modules. In this circuit, they are used to read the signal from a passive infrared PIR) motion sensor. This signal can be sent from one module to the other by using I/O Line Passing. A digital input signal on the DIO1 pin (pin 19) of module A can drive a digital output signal (DIO1) of module B. Similarly, an analogue input signal on AD0 of module A (pin 20) can control a PWM output signal of module B.

The 'master' module receives the sensor information from the 'slave' ZigBee modules. A single PIR sensor (type AMN14112) is connec-

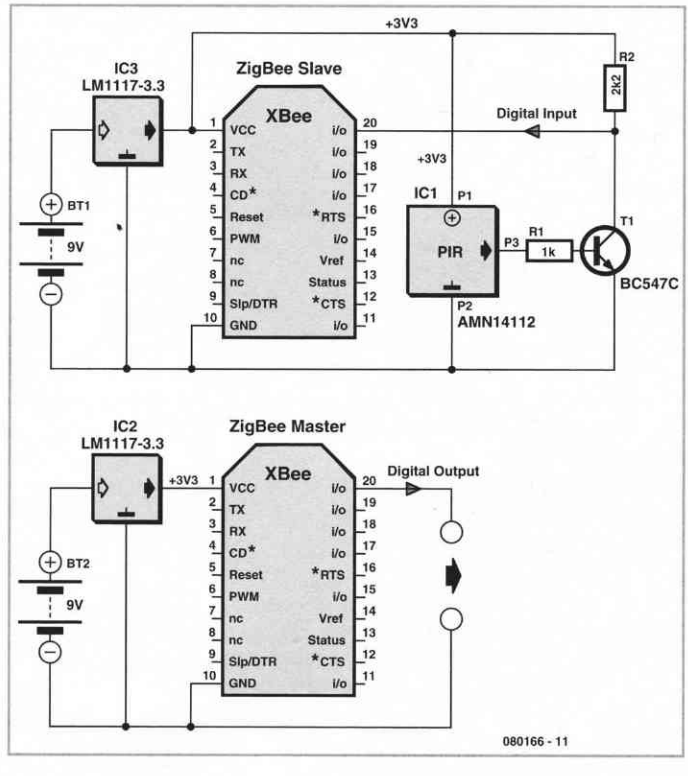

ted to each slave. It has a digital output, a detection range of 10 metres, and an operating voltage of 5 V. As the ZigBee modules operate from 3.3 V, the lower supply voltage is obtained by using a 3.3-V regulator (type 1117) in combination with the circuit shown here.

The schematic diagram is simple and consists of only a few components: a 3.3-V voltage regulator with a 9-V battery, the module, the PIR sensor, and a transistor. The transistor pulls the digital input of the Zig-Bee module to ground when the PIR sensor detects motion. When the PIR sensor does not see anything, the transistor is cut off and the 3.3-V supply voltage is applied to the ZigBee module via a 2.2-kΩ pull-up resistor. Power is provided by the 9-V battery. This compact circuit can be built into a small case (so it can be placed in the garden, for example).

The modules are programmed using the X-CTU program. The data sheet for the XBee modules is quite clear, and the commands are simple. The screenshot shows a terminal

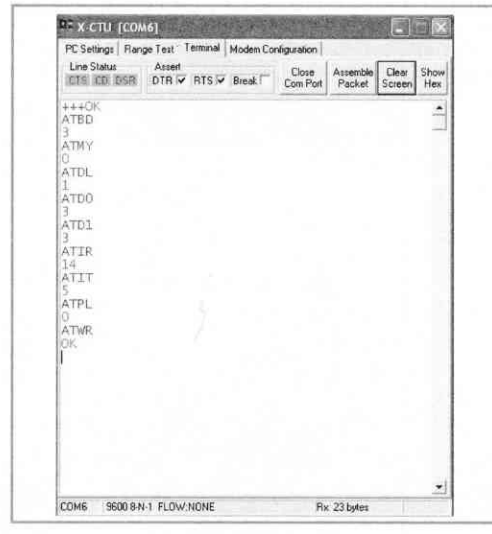

emulator with the settings for the transmitter module (with the connected PIR sensor).

Be sure to update the ZigBee command set to version 10A2 (v1.xA0*) when you are programming the modules, as otherwise you

```
Master ZigBee code (receiver)
ATMY = 1 (Master address = 1)
ATDL = 0 (The address of the module it must receive data from is 0)
ATPL = 0 (Low power consumption)
ATIU = 1 (Disable transmission via UART)
ATBD = 3 (Set communication to 9600 baud)
ATD0 = 5 (Digital output on pin 20 of the module)
ATD1 = 5 (Digital output on pin 19 of the module)
ATIA = 0 (The master must change its outputs based on the slave with
   address 0. If ATIA = 0xFFFF, the master will change its outputs
   based on each received packet, independently of the address of
   the transmitter.)
ATWR (Save the settings in the flash memory)
```

```
Slave ZigBee code (transmitter)
ATMY = 1 (Slave address = 0)
ATDL = 0 (The address to which it must transmit is 1)
ATPL = 0 (Low power consumption)
ATIU = 1 (Disable transmission via UART)
ATBD = 3 (Set communication to 9600 baud)
ATD0 = 3 (Read the digital input signal on pin 20)
ATD1 = 3 (Read the digital input signal on pin 19)
ATIR = 14 (Sampling rate = 0x14)
ATWR (Save the settings in the flash memory)
```

cannot include parameters with some of the commands and the module will not understand some of the commands.

Also be sure to perform a Read operation first when you update the firmware (from 1083 to 10A2).

If you immediately perform a Write with the new version, you will lose communication with the module because the configured parameters will be overwritten.

The PIR transmitter module can be placed anywhere within a range of 30 metres from the receiver, such as in the garden. For a larger range, you can use the somewhat more expensive XBee Pro modules.

(080166-1)

Downloads
The source code and hex code for this design are available on *www.elektor.com* for free downloading; file # 080166-11.zip.

179 Simple Slave Flash

AUDIO, VIDEO AND PHOTOGRAPHY

F. Roesky

Current designs of slave flash units are, in the opinion of the writer, too complicated and may be simplified without any problems and without losing any of their usefulness as may be seen from the accompanying circuit diagram. This proposed circuit offers a number of advantages:

- no need for an additional power source, since power is derived via the sync contacts of the main flash unit;
- automatic reset (no need for a button);
- operates with new as well as older main flash units (contact voltage >100 V).

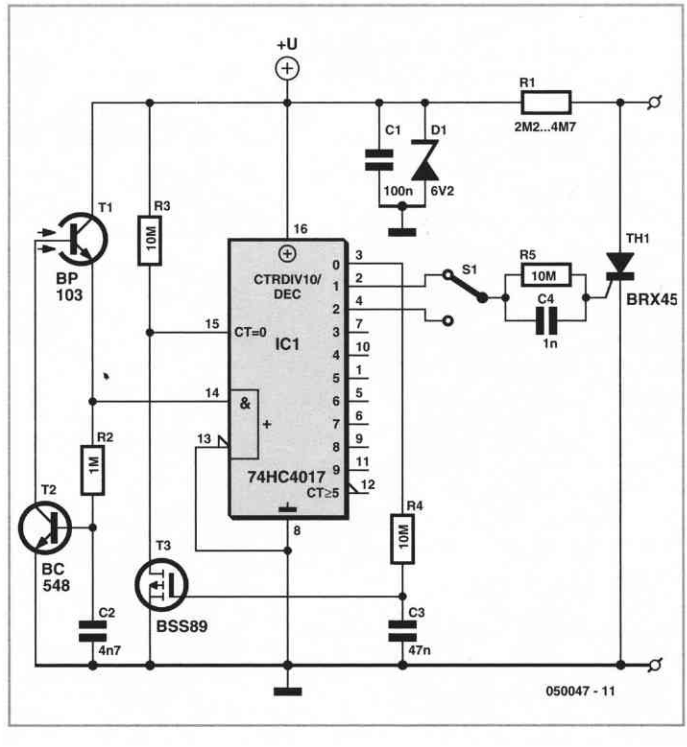

In spite of these proven practical properties, the design is simplicity itself. It is controlled by a low-current CMOS decimal counter IC1, a Type 74HC4017, which enables the entire circuit to be powered directly via the sync contacts of the main flash unit via resistor R1 and voltage limiter D1.

The control circuit based on transistor T1 also operates with minimal quiescent current.

When a flash is detected, T1 provides a clock pulse to IC1. Depending on the position of switch S1, the low-power thyristor fires on the second or third flash pulse, so that it does not react to the preliminary flash that prevents the red-eye effect. After about 0.4 second, when the main flash unit is discharged, IC1 is reset via R4, C3 and T3. At that instant, the current drain of IC1 increases briefly and the voltage across C1 collapses. This is of no consequence, however, since after at most one second C1 is recharged to a level at which the circuit is operational again.

If the circuit is to be polarity-sensitive, connect a small bridge rectifier rated at 400 V between the contacts of the main flash unit and terminals JP1 and JP2.

(050047-1)

180 Paraphase Tone Control

AUDIO, VIDEO AND PHOTOGRAPHY

Ton Giesberts

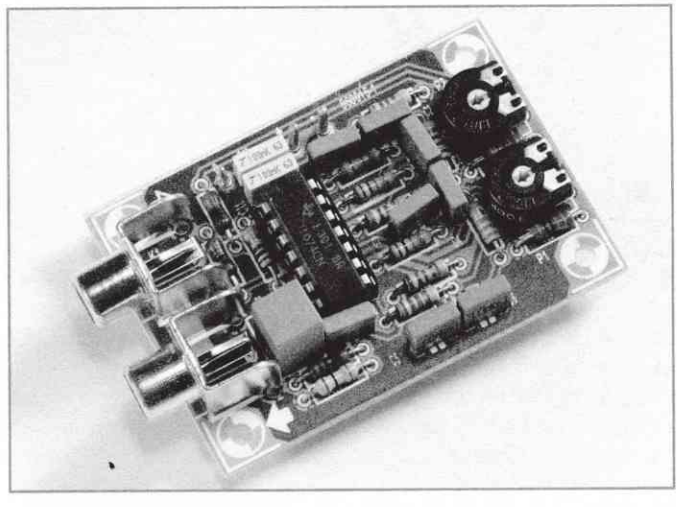

As opposed to the widespread Baxandall circuit (dating back to 1952!) a 'paraphrase' tone control supplies a straight frequency response as long as the bass and treble controls are in the same position. This unique property makes the 'paraphase' configuration of interest if only treble or bass needs to be adjusted – it is not possible to adjust both at the same time! Essentially, it's the difference in setting of the tone controls that determines the slope of the frequency response, and the degree of bass/treble correction.

Specification

Current consumption (no signal)		8 mA
Max. input signal		1 Veff (at max. gain)
Gain	at 20 Hz	+13.1 dB max.
		–6.9 dB min.
	at 20 kHz	+12.2 dB max.
		–7.6 dB min
Gain (controls at mid position)		2.38 x
Distortion (1 Veff, 1 kHz)		0.002% (B = 22kHz)
		0.005% (B = 80 kHz)

The circuit in **Figure 1** is simplicity itself, based on two networks C1-C2-C3/R9-R10-R11 and C5-C6-C7/R12-R13-R14. The first is for the high frequencies (treble) response, the second, for the low frequencies (bass). The roll-off points have been selected, in combination with C4 and C8, for the sum of the two output signals to re-appear with a 'straight' frequency response again at the output. Roughly equal output levels from the networks are ensured

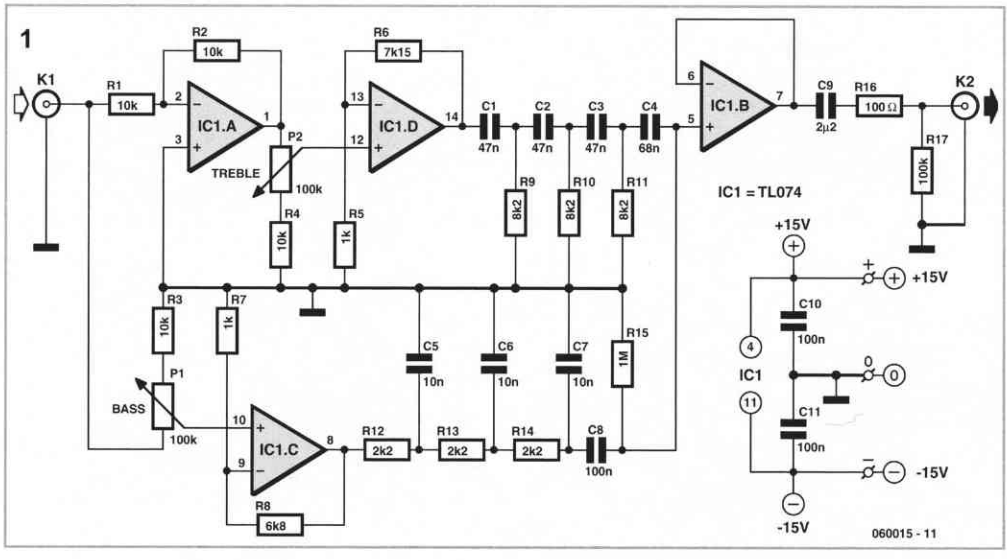

by R6 = 7.15 kΩ and R8 = 6.80 kΩ. However, the operating principle requires the input signals to the two networks to be in anti-phase.
For best operation the networks are driven by two buffers providing some extra gain. The gain of IC1.D is slightly higher than that of IC1.C to ensure the overall response curve remains as flat as possible at equal settings of the tone controls. Because each network introduces a loss of about 1.72 (times), IC1.D and IC1.C first amplify the signal. The gain is set at about 8 (times) allowing input signal levels up to 1 V to pass the circuit at maximum gain and distortion-free. The gain also compensates the attenuation if you prefer to keep the tone controls at the mid positions for a straight response.

To audio fans, the circuit is rewarding to experiment with, especially in respect of the crossover point of the two networks. R3 and R4 determine the control range, which may be increased (within limits) by using lower resistor values here. The values shown ensure a tone control range of about 20 dB.

IC1.B buffers the summed signal across R15. C9 removes any DC-offset voltage and R16 protects the output buffer from the effects of too high capacitive loads. R17, finally, keeps the output at 0 V.
The choice of the quad opamp is relatively uncritical. Here the unassuming TL074 is used but you may even apply rail to rail opamps as long as they are stable at unity gain. Also, watch the supply voltage range.
The graph in Figure 2 (produced by our Audio Precision analyser) shows nine response curves obtained by setting the two tone controls to minimum, mid position and maximum.

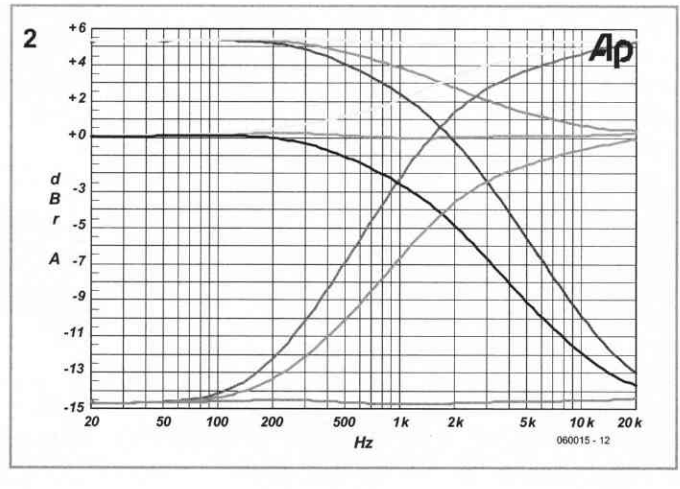

3a

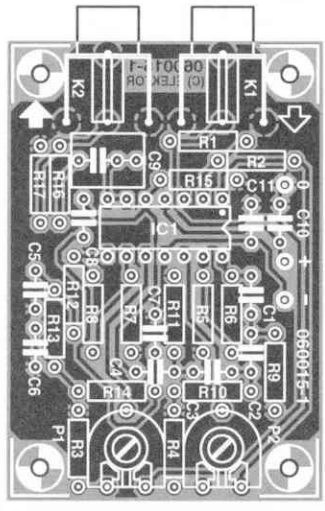

100%

3b

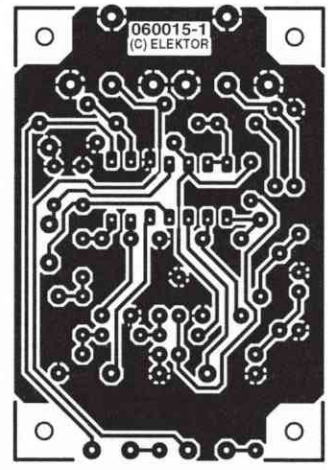

100%

COMPONENTS LIST

Resistors
R1-R4 = 10 kΩ
R5, R7 = 1 kΩ
R6 = 7kΩ15
R8 = 6kΩ80
R9, R10, R11 = 8kΩ2
R12, R13, R14 = 2kΩ2
R15 = 1 MΩ
R16 = 100 Ω
R17 = 100 kΩ
P1, P2 = 100 kΩ preset or chassismount potentiometer, linear law

Capacitors
C1, C2, C3 = 47 nF MKT, lead pitch 5 mm
C4 = 68 nF MKT, lead pitch 5 mm
C5, C6, C7 = 10 nF MKT, lead pitch 5 mm
C8, C10, C11 = 100 nF MKT, lead pitch 5 mm
C9 = 2μF2 MKT, lead pitch 5 mm or 7.5 mm

Semiconductors
IC1 = TL074

Miscellaneous
K1,K2 = line socket, PCB mount, e.g. T-709G (Monacor/Monarch)
PCB, ref. 060015-1 from The PCBShop

Note that 0 dB is relative to the mid position of the pots!
A simple circuit board was designed for the project (**Figure 3**). Linear-law potentiometers may be fitted directly onto the board. Two boards are required for a stereo application. The relevant connections on the boards are then wired to a stereo control potentiometer.

(060015-1)

181 Programming the Propeller IC

MICROCONTROLLERS

Parallax, well known for its successful Basic Stamp IC, has recently introduced the Propeller: a new microcontroller with a certain difference. It packs no less than eight 32-bit processors (referred to as COGs in Propeller jargon) into a single package with only 40

pins. That design makes genuine simultaneous multiprocessing possible, and the sophisticated internal structure of the device makes it relatively easy to implement video and signal-processing applications.

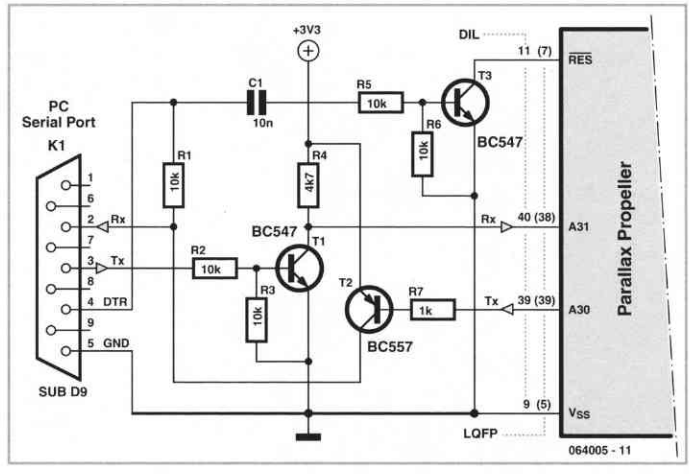

The Propeller can be programmed in assembly language or the high-level Spin language. The processor and the programming tools were developed entirely in-house by Parallax, with the hardware being designed from scratch starting at the transistor level. The basic idea behind that was to avoid becoming involved in all sorts of patent disputes with other manufacturers. The result is astounding, and for software developers it certainly requires a change in mental gears.
As is customary with modern microprocessors, the Propeller has a simple serial programming interface. The developer's toolkit from Parallax has a modern USB port for that purpose, but a reasonably simple alternative (illustrated here) is also possible for anyone who prefers to work with the familiar RS232 port. Don't forget that the Propeller works with a 3.3-V supply voltage.

(064005-1)

182 The OC171 Mystery (solved)

MISCELLANEOUS ELECTRONICS AND DESIGN IDEAS

Jan Buiting, PE1CSI

The OC170 and OC171 transistors are germanium p-n-p alloy-diffused transistors in a TO-7 metal case. They were designed by Philips in the early 1960s as RF transistors with a (then spectacular) transition frequency of about 70 MHz. At the time, these devices marked a transition from the old 'grown alloy' to the new 'alloy-diffused' junction manufacturing, at the verge of the silicon age that was about to begin.
The OC170 and OC171 were a good success and got widespread use as RF and IF amplifiers, oscillators and mixers in early MW/LW portable radios as well as TV sets. When Philips phased out their 'OC' type prefix to comply with the Pro Electron semiconductor type designation system, successors of the OC170/171 called AF114, AF115, AF116 and AF117 appeared on the market. Both the OC and the AF devices carry a 'terrible secret' inside their TO-7 metal can.

If you switch on a 'dead' 1960s transistor radio containing one or more of the above mentioned trannies, try gently tapping them with a small screwdriver. In many cases the radio will crackle, burst to life or work intermittently and drop silent again after a while.
Surprisingly, unsoldering a suspect OC171 from the circuit and checking its junctions using an ohmmeter will not reveal faults in the junction proper. The device will also achieve its normal electrical specifications. However, an unexpected short-circuit may be

measured between the shield wire (S) and the emitter or collector. In the 455 kHz IF amplifier shown in **Figure 1**, a domino-effect with all transistor biasing occurs if, say, the collector of the first OC171 is shorted to the shield, hence to ground. This was a practical case and a trigger to start a research.

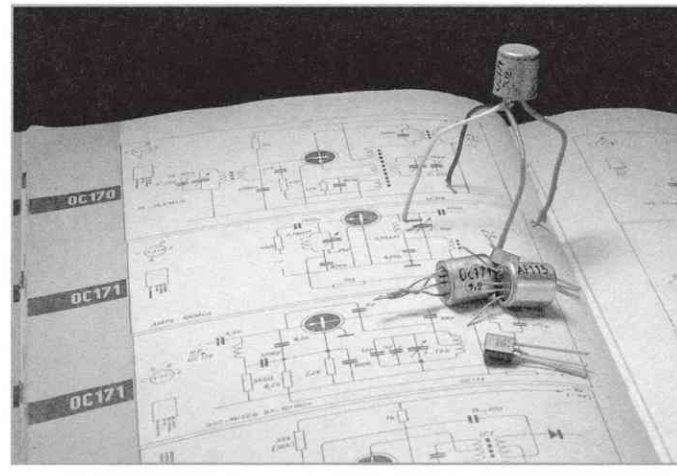

In reference [1] Andrew Emmerson explains that these short-circuits are caused by microscopic conductive 'hairs' growing from the inside of the can in the air space under the grease filling (probably petroleum jelly or an early form of silicone grease). The phenomenon is illustrated in **Figure 2**. Typically the hairs will reach the emitter or collector wire. The nature of the growth is unknown; some suggest it's due to an electrochemical effect between the can metal and the wire metal, with the air and the slightest trace of acid in the grease interacting in the process. Others claim it's a 'Philips nasty' – a chemically engineered time bomb to generate sales of new radios. An even more unlikely suggestion is one of Philips' US competitors having supplied the grease through a sub-contractor 'in the plot'.

Interestingly, reference [2] confirms that the much dreaded 'Qual. Lab.' at Philips Semiconductors had expressed doubts about the use of a grease sealant around the diffused Ge junction used in OC17x and the later AF11x devices. It is not known if the air pocket beneath the grease filling is intentional or a production flaw.

A well established trick applied by radio & TV service engineers was to cut the shield lead (S), isolating it from the circuit ground but if

1

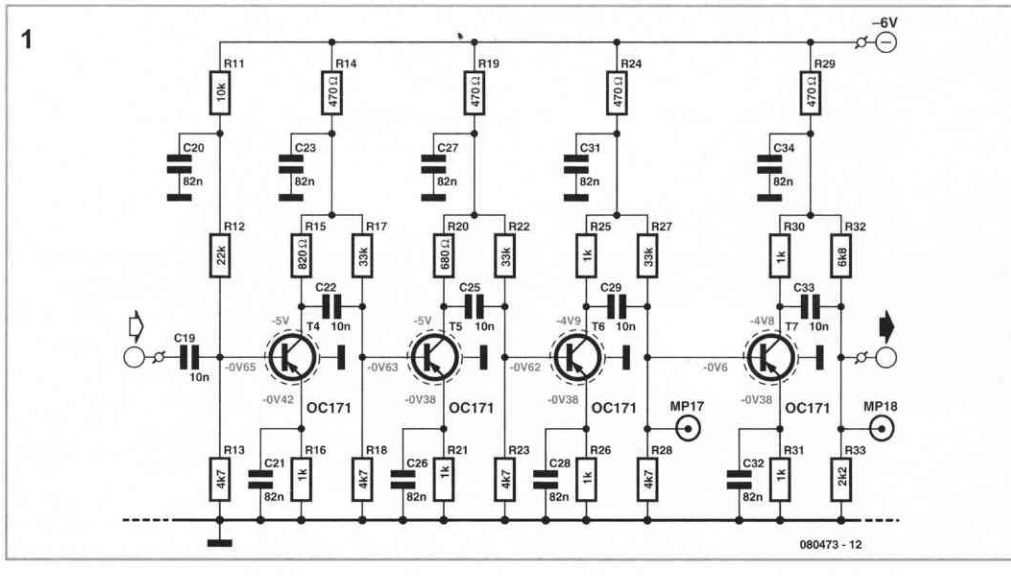

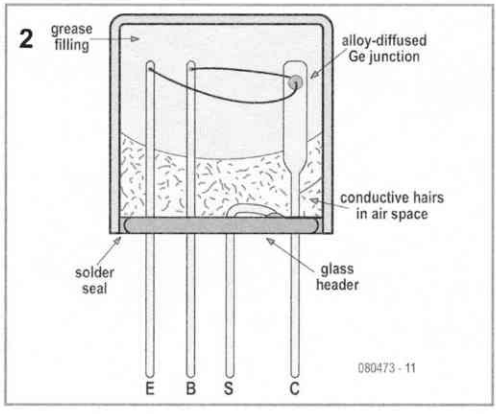

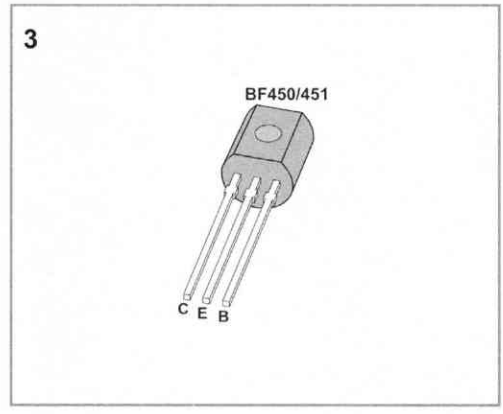

you were unlucky a hair would land between the E and B wires. Another disadvantage is the transistor case then being at the emitter or collector potential, causing RF radiation and the magical but unwanted 'hand effect' – the TO-7 is a relatively large case!

The hairs may be 'zapped' using a 47 μF electrolytic charged to about 50 V and connected between the S (shield) wire and the E, B and C wires twisted together. Although this method is good to retain the originality of your radio, the fault may occur again after some time as the hair growth continues.

Germanium transistors have a bias voltage of 0.2–0.3 V, so if an OC171 or one its siblings is replaced by a modern silicon p-n-p RF transistor like the BF450 or BF451 (**Figure 3**), resistors may have to be changed to get 0.6–0.7 V $V_{B\text{-}E}$ bias levels in the circuit. Also, almost all silicon transistors will have a much higher transition frequency than the old 'geranium grot', so due attention should be given to RF decoupling and changed internal capacitances.

There is no point in buying NOS (new old stock) OC17x or AF11x transistors on EBay as the shiny devices you'll get will have the problem too.

Reportedly some audio transistors like the AC127, AC128, AC176, AC187 and AC188 also suffer from unwanted hair growth in invisible places.

(080473-I)

[1] *Electronic Classics, Collecting, Restauration and Repair*, Andrew Emmerson. ISBN 0-7506-3788-9.
[2] *50 Jaar Herkennen (Recognising 50 Years). Philips Semiconductors Nijmegen*, C. van Anrooij, F. Geersten. H. Jacobs, P. Willemsen, G. de Wind (Editors). ISBN 90-90-17050-2.

183 E-blocks = cheaper PLC design

MICROCONTROLLERS

John Dobson

If you are a habitual user of PLCs (programmable logic systems) then you may be frustrated with the fact that you are paying in excess of £ 100 for a simple system that (hardware-wise) contains only a couple of inputs and a couple of outputs which would cost you just over £ 10 if you put it together yourself. Well here is a suggestion that could help you develop your own PLC for a lot less.

Hopefully you will by now have read about our E-blocks™ solution. There are two new E-

blocks available: an opto-isolator board and a relay board.
The photograph shows them connected to a PIC-micro Multiprogrammer. The combination of a PIC-micro programmer, opto-isolators and a relays is functionally equivalent to a PLC, and the flow chart driven program Flowcode, is an easy-touse graphical development environment which you can use for driving your PLC.

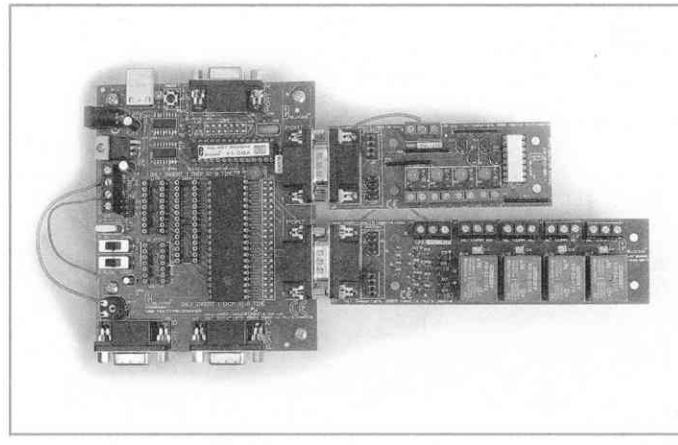

The hardware (i.e. circuit boards) are supplied with the complete circuit diagrams so with a little work you can make a circuit board with your own configuration of PLC on it.

A motor driving board will be available shortly. E-blocks modules, sensors and associated software are available through the Elektor Electronics Shop, see *www.elektor.com*.

(060079-1)

184 Universal Thermostat

HOME AND GARDEN

Ruud van Steenis

This circuit came about because of the dissatisfaction regarding the operation of the thermostat in a refrigerator. When using the built-in thermostat, it turned out that it as necessary to reduce the temperature setting in the summer in order to keep everything cold, compared to the setting in winter.

This is probably the result of a temperature sensor that is mounted too close to the cooling element, which means that phenomena such as thermal leaks and the average temperature in the fridge are not sufficiently accounted for in the control loop.

While designing the circuit for this electronic thermostat a decision was made to increase the control range so that it would also be suitable for other applications. Potential applications are the temperature control of a (living) room, heating of a flower box and obviously the etching tank!

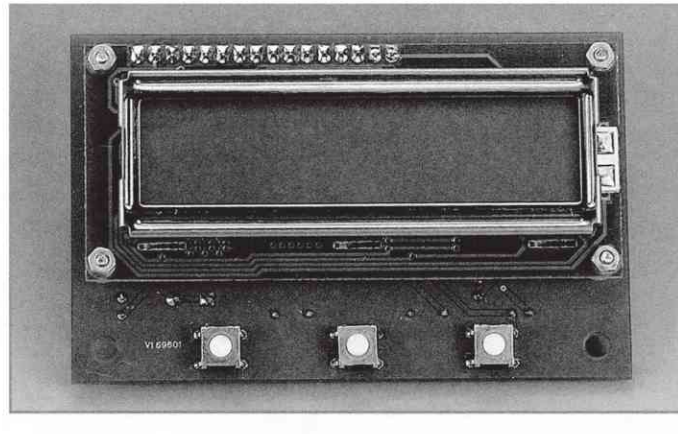

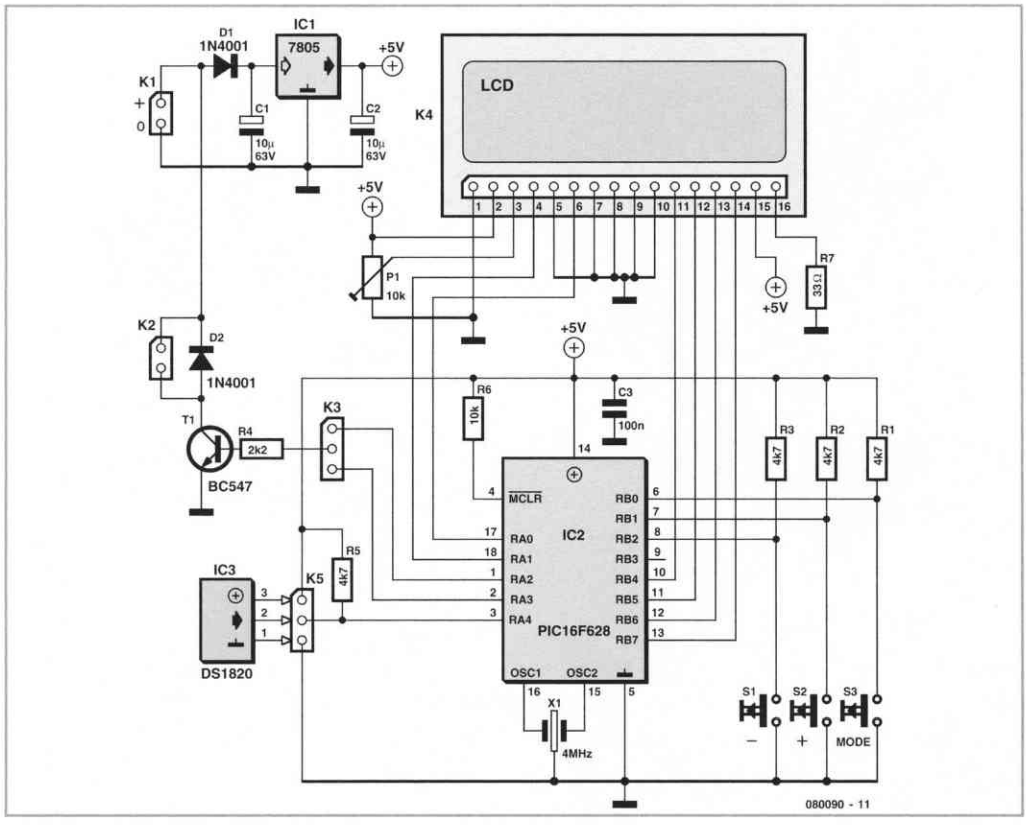

The control range is adjustable from –25 °C to +75 °C in steps of 0.25 °C. The hysteresis is also adjustable. Hysteresis is the temperature error at which the system will turn on or off. A very small hysteresis results in a very stable temperature but has as disadvantage that the heating or cooling system turns on and off at a high rate, which generally leads to extra wear and tear in the compressor (cooling) or pump (heating).

The hysteresis can be adjusted from 0.1 °C (very stable temperature) to 10 °C (practically no control at all...) in steps of 0.1 °C. The settings can be changed with 3 push uttons and the information is displayed on a 2×16 character LCD. The settings are stored in the EEPROM inside the PIC. During ormal operation the LCD is used to isplay the actual temperature.

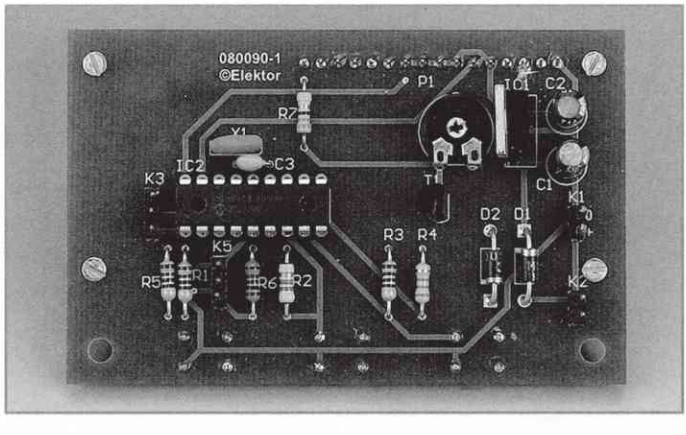

The main component in this circuit consists of a PIC 16F628. In addition to the aforementioned 2×16 character LC display, the temperature sensor, type DS1820, also serves an im-

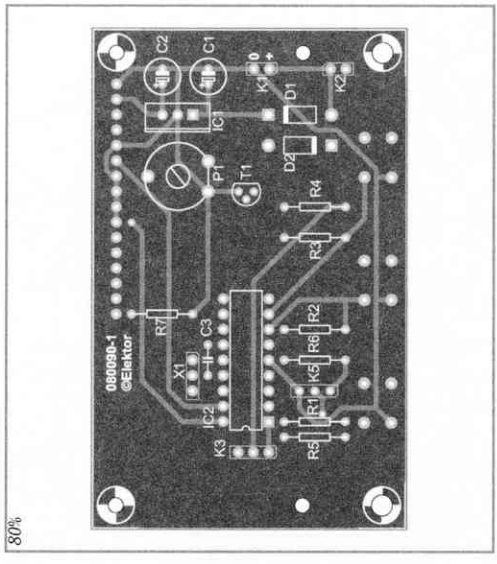

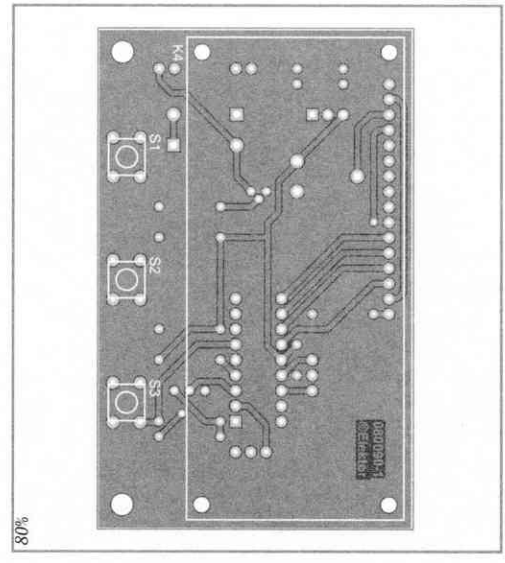

COMPONENTS LIST

Resistors
R1, R2, R3, R5 = 4k7
R4 = 2kΩ2
R6 = 10 kΩ
R7 = 33 Ω
P1 = 10 kΩ preset

Capacitors
C1, C2 = 10 μF 63V
C3 = 100 nF

Semiconductors
D1, D2 = 1N4001
T1 = BC547
IC1 = 7805
IC2 = PIC16F628-04/P (programmed, with software # 080090-11)

Miscellaneous
X1 = 4MHz ceramic resonator
S1...S3 = miniature push button
K1, K2 = 2-way pinheader
K3, K5 = 3-way pinheader
K4 = 16-way pinheader
DS1820 and 3-way ribbon cable
LCD with 2x16 characters
PCB #080090-1 from *www.thepcbshop.com*

portant role in the circuit (connected to K5). Fortunately the DS1820 is already factory calibrated, so this saves us from a difficult task. A classic 7805-regulator and a common transistor pretty much complete the circuit. The clock source for the PIC is supplied by a 4 MHz ceramic resonator with built-in capacitors (Conrad Electronics order number 726406/726507).

There are two switching outputs from the PIC, one for cooling applications and another one when heating is called for. When cooling, the refrigeration system obviously has to be turned on when the temperature is too high, while when heating, the appropriate action needs to be taken when the temperature threatens to become too low. A jumper in this circuit makes the selection between cooling (jumper 2-3 on K3) and heating (jumper 1-2 on K3) possible.

When the circuit is turned on, the display shows 'temperature' with underneath that the actual temperature in degrees Celsius. If the sensor is not connected then an error message will be displayed. By holding down the 'Mode' button until an asterisk appears, the text 'set temperature' appears and you can set the desired temperature in steps with the + and – buttons. By pressing the Mode-button again it is possible to set the desired hysteresis with the + and – buttons.
A hysteresis of 1 °C means that with a temperature setpoint of 20 °C and when heating, the output becomes active when the tempe-

rature drops below 19 °C (20–1), while everything turns off when the temperature reaches 21 °C (20+1).
To connect the circuit to external equipment a relay control (via K2) was chosen because of safety considerations. The transistor can easily handle currents up to 100 mA and a freewheeling diode suppresses the back-emf from the relay coil. The power supply voltage can be selected based on the rated coil voltage of the relay that is used, 12 V, for example.
Keep in mind that when using this circuit to replace the thermostat in a fridge, the compressor motor which is to be controlled is directly connected to the mains and **a safe implementation of the complete circuit is therefore absolutely essential**.
If this circuit is used to heat, for example, a flower box, it can be useful to replace the switching transistor with a HEXFET. A prototype circuit with an IRFP3710, supplied a 12-V heating element with 1.5 A without any trouble at all, while the losses where so small that no heatsink was required. The 5-V output voltage from the PIC was in this case sufficient to turn the FET on properly.
The program in the 16F628 fills only about half of the available program memory space. Because there was no compelling need to program the whole thing in a particularly 'compact' way, the PicBasic Pro compiler was used for generating the hex file for the PIC.
Both the source file (1820THER.BAS) as well as the hex file to be programmed into the 16F628 (1820THER.HEX) are available free from the Elektor website as file number 080090-11.zip.
The source code is liberally commented, so that making changes (changing the temperature range, for example) is quite straightforward.
The temperature is initially set to 20 °C and the hysteresis to 2 °C.

For the sensor it is best if you use a 'plain' DS1820 and fit it with a length of 3-way ribbon cable. When using it with a refrigerator this has the advantage that the sensor cable can be easily routed to the outside because the rubber seal on the fridge door still closes sufficiently well to seal around the cable. Once the ribbon cable is connected to the DS1820, you can cover the sensor entirely with a thin layer of two-part epoxy glue and (before the glue has set) shrink a small length of heatshrink tubing around it. This gives a good, waterproof seal.
Alternatively you can buy a ready-made waterproof DS1820 sensor (for example Conrad Electronics # 184037/184052). These have, however, a type of telephone cable that is somewhat thicker than the ribbon cable.

(080090-I)

Downloads
The source- and hex-code for this project, 080090-11.zip, as well as the layout for the PCB (080090-1.zip) are available as a free download from the Elektor website.

185 Step Down Converter Controller

POWER SUPPLIES, BATTERIES AND CHARGERS

Dirk Gehrke, Texas Instruments

The TPS6420x controller is designed to operate from one to three series-connected cells or from a 3.3 V or 5 V supply obtained from a USB port. At its output it can produce 3.3 V at 2 A, suitable for powering a microcontroller-based system. With a suitable choice of external components (inductor, P-channel MOSFET and Schottky diode) the device can be operated over a wide range of possible output voltages and currents. A further advantage is its extremely low quiescent current consumption in powerdown mode (100 nA typical) and in no-load operation (20 mA). Also, if the input voltage is less than or equal to the desired

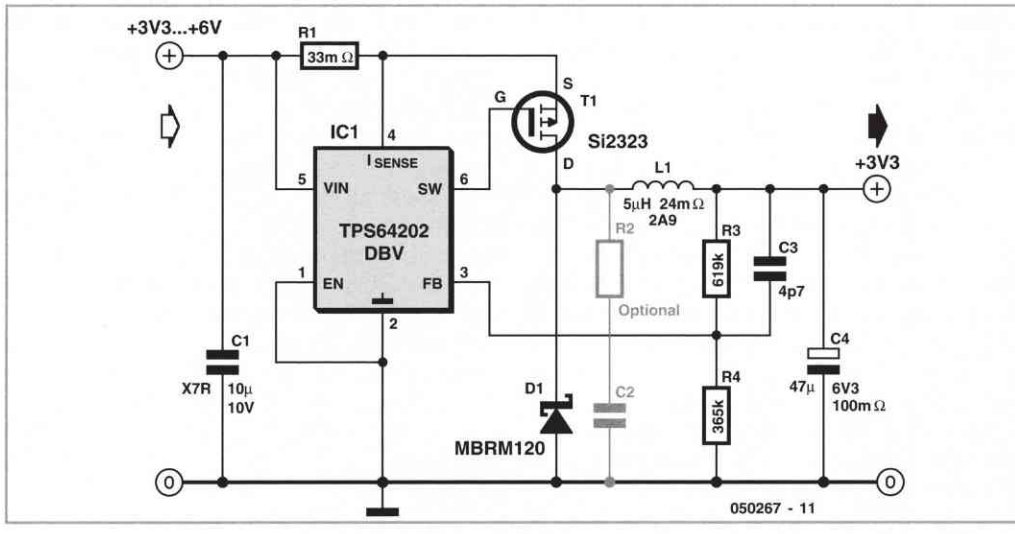

output voltage, the device can connect the output directly to the input.

Using just a few external components the TPS6420x can cover an output voltage range from 1.2 V up to the input voltage at up to 3 A, as long as a suitable Pchannel MOSFET and Schottky diode are used. The device is an asynchronous step-down converter which, unlike the more widely-used PFM (pulse-frequency modulation) and PWM (pulse width modulation) types, involves a constant on-time and/or constant off-time. Conventional controllers operate in PWM mode at medium to high loads, switching to PFM at lower loads in order to minimise switching losses. The controller described here also adjusts its switching frequency in accordance with the load to achieve a similar effect to the PFM/PWM controllers.

The circuit diagram shows a classical step-down converter with an input voltage range from 3.3 V to 6 V and an output voltage of 3.3 V at a current of up to 2 A. The optional 33 mΩ shunt resistor provides for current limiting. The TPS64202 offers a minimum on-time selectable between 1.6 ms, 0.8 ms, 0.4 ms and 0.2 ms and a fixed off-time of 300 ns. A MOSFET in the supply voltage path is switched on by the controller for as long as is necessary for the output voltage to reach its nominal value, or until the maximum permissible current, as determined by the shunt resistor, is reached. If the current does exceed this limit the MOSFET is switched off for 300 ns. If the nominal output voltage is reached, the MOSFET is switched off and remains in the off state until the output voltage once again falls below the nominal value. At very low output currents the controller there-

TPS	On time	Off time	Applications
64200	1,6 µs	600 ns	Ideal for high efficiency over the entire range of output loads
64201	1,6/0,8/0,4/0,2 µs	600 ns	Reduced on-time for higher frequency operation than TPS64200, with switching frequency outside audio range
64202	0,6/0,8/0,4 µs	300 ns	Ideal for high switching frequency applications where the mark-space ratio approaches 1, such as converting 3.8 V to 3.3 V; the minimum off time determines the switching frequency
64203	0,6 µs	600 ns	Ideal for circuits with a low mark-space ratio where high switching frequency is required, such as converting 5 V to 1.5 V; the minimum on time determines the switching frequency

fore operates in 'discontinuous mode' (DCM). Each switching cycle begins with the current at zero. It rises to the threshold or maximum value, and then falls again back to zero. At the moment of switch-off the Schottky diode causes the residual energy in the inductor to appear as a quickly-decaying oscillation at the resonant frequency of the output filter. This low-energy oscillation in discontinuous mode is normal and has no adverse effect on the efficiency of the converter. It can be damped using the (optional) RC series network.
At higher output currents the switch-down converter operates in continuous conduction mode (CCM). In this mode the inductor current never falls to zero. The output voltage is directly proportional to the switching mark-space ratio in this mode.
If the Si2323 P-channel MOSFET from Vishay-Siliconix is not available, the IRLML6401 (12 V type) or IRLML6402 (20 V type) from IRF can be used instead. Both these types have a higher on resistance, but do offer a lower gate capacitance.
An alternative for the Schottky diode suggested is the MBRM140 (available from Digi-Key and Farnell), although this is in an SMB package rather than the Powermite package of the MBRM120. The voltage drop at 1 A is somewhat higher: 0.6 V instead of 0.45 V. The devices are manufactured by IRF and ON Semiconductor.

(050267-1)

Literature at *www.ti.com*:
SOT23 Step-Down Controller,
document reference number SLVS485
TPS6402 Evaluation Module (3.3 V, 2 A),
document reference number SLVU093

186 Logic Goats

MISCELLANEOUS ELECTRONICS AND DESIGN IDEAS

Rob Ives

The central processing unit (CPU) at the heart of every computer or microcontroller system is basically a vast collection of microscopically small switches and logic gates. Unfortunately, the function of the logic gates in particular seems hard to grasp for the not too technically minded (or those who can't read simple tables). Now, through the power of paper (cheap and generally available) these logic gates are available in goat form.

Properly constructed from the DIY guide the AND goat will nod its head only in you press the right button **and** the left button.
The OR goat, then, will nod its head in approval when the left button **or** the right button or **both** buttons are pressed.

Web Link
www.flying-pig.co.uk/pagesv/logicgoat.html

The NOT goat, finally, gives a friendly nod of the head when the button is **not** pressed.
These models can be made from paper using delightfully designed cut-and-fold models you can download on the Flying Pig website. Suitable for age range 5 through 105 (some help may be required at the extremes).

(080482-I)

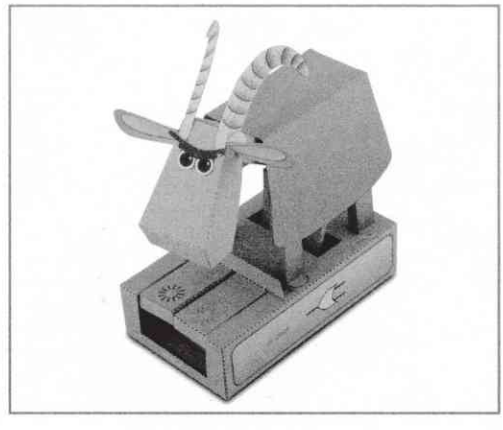

187 Portable Thermometer

TEST AND MEASUREMENT

Joseph A. Zamnit

It's usually is a good idea to check the temperature before setting off for an outdoor activity. Equally important is a temperature check while at the actual place. The former is easy to do using the local TV or the Internet but once you are in the bush or the countryside such a task becomes more difficult. The small circuit described here solves the problem. It is very easy to use and consumes so little current that it will work for the battery's shelf life.

The circuit uses a standard LM35DZ sensor (IC3) whose analogue output voltage is buffered by an LM358 (IC2A). The voltage is read by the microcontroller and converted into a BCD value so it can appear on the multiplexed 7-segment displays. The display will switch off after approximately 30 s unless button S1 is pressed. In this way battery power is conserved. Pressing the button again will show the temperature. In the prototype two 0.56" (14.2 mm) common-cathode (CC) green displays were used to show the current value of the temperature. The meter can show temperatures between 0 and 100 °C.

The first time it is used the meter has to be calibrated against a known reading. Preset P1 can be varied to change the value of the temperature by about 4 °C. Press the button and then turn the preset until the correct value of the temperature is shown.

The microcontroller used is a PIC16F684. This has been chosen because it has a number of inbuilt functions and most importantly an internal oscillator which obviates the need for an external crystal, freeing up pins for I/O activities.

Two 7-segment displays are connected in a multiplexed fashion. The displays are alternately switched on and off by the BC547 transistors. Each display is blanked before displaying the value to prevent ghosting. A

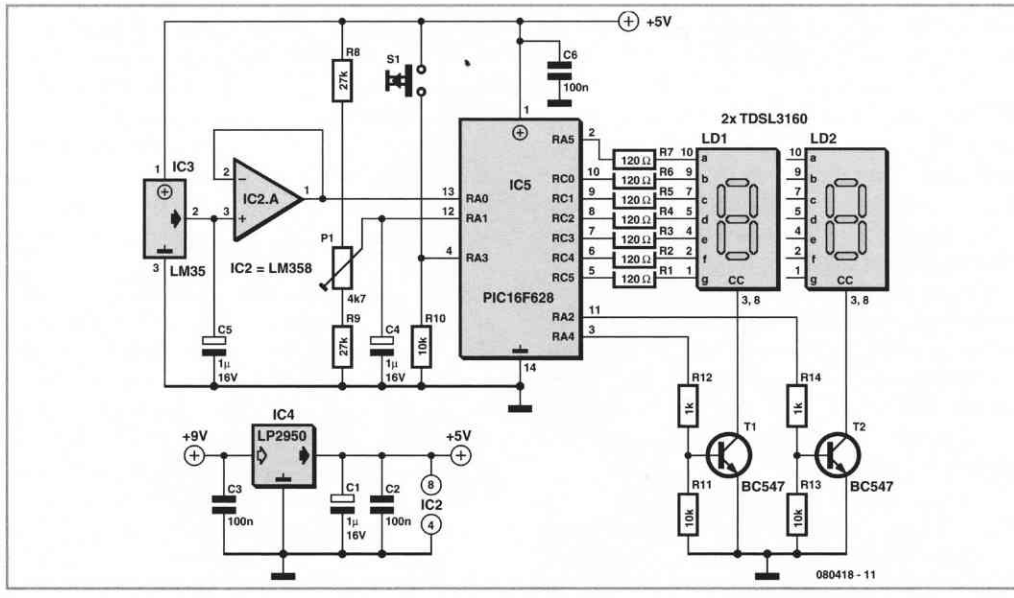

temperature sample is read every 30 s to prevent the value displayed from changing due to fluctuations in the temperature. An LP2950 is used to regulate the supply voltage to 5 V. This is a low dropout regulator which can work down to 6 V hence juicing the battery for the last drop of energy. The thermometer may also be run from three AA dry batteries in series with no series regulator.

The PIC software can be downloaded free of charge from the Elektor website. The archive file number is 080418-11.zip. The software was developed using CCS C.

(080418-I)

188 Mysterious Self Charging

MISCELLANEOUS ELECTRONICS AND DESIGN IDEAS

Peter Lay

Here we take a light-hearted, exploring yet purposely unscientific look at one of the fundamental effects of physics, namely contact voltage. When two dissimilar materials come into contact an exchange of (negatively charged) electrons occurs so that the donor material losing electrons takes on a net positive charge while the material receiving electrons takes on a negative charge, the overall effect giving rise to a contact potential. This effect occurs to a greater of lesser extent in all materials, the most common examples are the production of static electricity produced by rubbing two different materials together and also the thermo-voltaic effect. So much for the theory, now to practice...

To take what at first sight may seem like a mistaken example of this phenomenon we will need a discharged capacitor and a DVM (digital voltmeter) with a high input impedance. Connect the capacitor terminals to the DVM and short together the capacitor terminals using a length of wire and two crocodile clips. If all is in order the DVM display will read 0 (zero) volts. Now remove the short circuit and closely watch the DVM display as the voltage, microvolt by microvolt slowly rises. The capacitor is gaining charge from somewhere...

This effect is the result of the contact voltage (see diagram). In the capacitor there are two boundaries: (1) the metal electrode and the

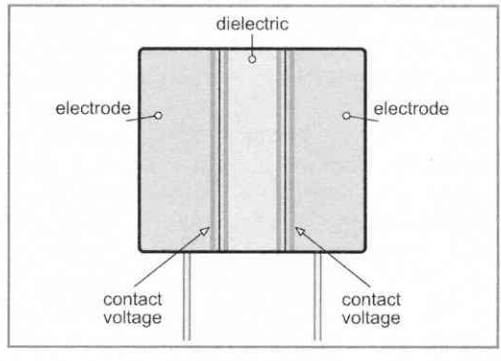

dielectric and (2) the dielectric and second electrode. At both boundaries free electrons pass from one material to the other. The two contact voltage sources are connected back to back in series which should cancel out the contact potential. So much for theory, in practice the boundary structure is not entirely homogeneous so that tiny potential differences are present. This produces the small potential difference that we can measure at the terminals.

Aluminium electrolytic capacitors are a little more complex; one terminal is connected to aluminium foil which has an insulating oxide layer; next comes a layer of liquid electrolyte and finally another aluminium foil connected to the other terminal. This structure gives rise to three potential boundaries. In addition, when the capacitor is charged, free electrons from the terminal electrode store energy by producing electrochemical reactions within the electrolyte (a process known as dielectric

absorption or 'soakage'). These effects are more pronounced in electrolytics compared to other types of capacitor.
Experimental results indicate that the measured voltage is higher with larger value capacitors. It has also been shown that the voltage exhibits a temperature coefficient; the higher the temperature, the greater the measured voltage.

To explore this characteristic further, a capacitor was carefully heated in a controlled manner. It is important not to use a naked flame or microwave oven; not just to prevent the possible melting or combustion of the external plastic casing, but more importantly to guard against the possible production and release of poisonous fumes. Once an electrolytic capacitor has been heated up in this way it will be irreversibly damaged so that it will no longer be suitable for use in a circuit. Having said that, sometimes it's necessary to sacrifice a few capacitors for the sake of experimentation.

Measurement with a DVM (R_i = 1 MΩ) of a radially leaded electrolytic capacitor with a rated capacitance of 100 μF gave a terminal voltage of 5 mV at 20 °C. At a temperature of 120 °C the potential had risen to 230 mV and the short circuit current was 0.5 μA. More precise measurements of the capacitor indicated that the voltage source had a source impedance of 852 kΩ and a source voltage of 426 mV. As a first approximation we can say that the correspondence between the terminal voltage and temperature is approximately linear. Using the measurements from the example above we therefore get a temperature coefficient of 2.25 mV/K.
Tests with other capacitors have produced a no-load terminal voltage of over 0.9 V. Several capacitors could be connected in series, not as a potential power source but as a sensor.

Two final notes:

1 The term 'no-load voltage' ignores the 1 MΩ input impedance of the voltmeter, which in series with the 852 kΩ source impedance loads the measured potential.
2 All of the measurements were made using discharged capacitors with no external voltage source.

(071153-I)

189 RC Mains Sockets with Feedback

HOME AND GARDEN

Jens Nickel

When on a trip to his local DIY emporium to buy light bulbs the author found a set of three radio-controlled mains sockets, plus transmitter, at a bargain price. Before the thought 'those will come in handy one day' had even made the journey from mind to mouth, they were in the trolley.

On the journey home numerous ideas for what to do with the devices came to mind, most of which, it must be admitted, were rather fanciful in nature. One thing became apparent: for high-availability mission-critical applications, such as arming the (yet to be implemented, natch) home alarm system, or pre-warming the (not yet fully fitted- out) shed, one key feature was lacking. There was just one tiny LED on the remote control transmitter to show whether the on and off commands were being sent. There was no feedback from the receivers to indicate whether the command sent by the transmitter had been correctly received.

Suddenly the author was reminded of one of the first projects on which he worked as a fresh-faced young Elektor editor. In 2005, his Elektor lab colleague Peter Verhoosel (who is

now enjoying a well-earned retirement) put together an interesting article about novel applications for radio controlled switches. The transmitter was modified so that the sockets could be switched on and off under timer control [1].
Suddenly inspiration struck and the author was off to the DIY shop to buy another set of radio controlled mains sockets. With a few more pounds invested in the project, he was ready to start experimenting.

The idea was to use the two systems together to make a remote switch suitable for 'safety critical' applications.
A multi-way extension lead is plugged into the remotely switched socket, and the apparatus to be switched is plugged into one of the sockets on the extension lead. An ordinary mains adaptor is plugged into another of the sockets on the extension lead. Usually an adaptor with a 12 V output will be required.

Now we turn to the second transmitter-receiver set. The transmitter has to be modified a little by taking the contacts normally used for the battery to a suitable socket so that the unit can be powered from the mains adaptor. One of the 'on' buttons on the transmitter must also be bridged by a small switch. There is the possibility of a small difficulty here if the two transmitter-receiver sets are configured to operate on the same channel. In general this configuration cannot be changed, and so the best solution is to use button 1 on the first set to switch the remote device and button 2 on the second set to send the feedback signal.

The rest is obvious enough: the socket at the receiver end of the second set will now indicate whether the remote appliance has been properly powered up. One possibility would be to use the second receiver socket to power an LED night light or similar device.

The system is armed by closing the switch that shorts the pushbutton on the second transmitter, and (if it has a power switch) turning on the mains adaptor. And amazingly, the prototype worked first time: a press of the 'on' switch of the first transmitter switched on the remote socket, powered up the extension lead, and triggered the second transmitter into sending its feedback. The second receiver socket duly turned on, indicating that the original transmission had been successfully received.

(080500-I)

Web Link
[1] www.elektor.com/magazines/2005/october/remote-control-operator.57913.lynkx

190 Temperature Sensor with 2-Wire Interface

TEST AND MEASUREMENT

Stefan Dickel

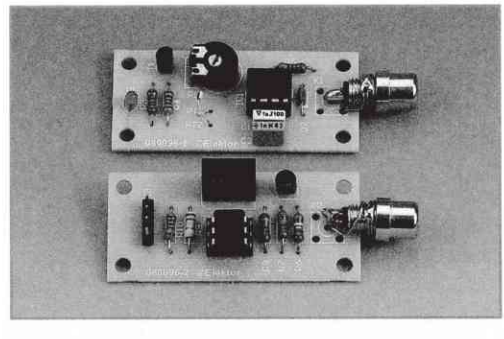

When designing a precision outdoor temperature sensor it is a good idea to electrically isolate the sensor from the signal conditioning circuitry to protect it from voltage spikes such as might be induced by lightning. Digital signal transmission is preferred over analogue as the circuitry is more straightforward, communication is more reliable and subsequent processing of the temperature

readings is easier. In the design shown here the signal and the power for the converter circuit are both carried on just two wires.

A type PT1000 temperature sensor is used. This is capable of withstanding temperatures of well over 130 °C (such as might be found in solar heating systems). The voltage dropped across the sensor is taken as input to an Analog Devices AD654 voltage-to-frequency converter. The power rail is then modulated with a square wave signal whose frequency is dependent on the measured temperature. The signal can be carried on a cable over a great distance. At the receiver end an optocoupler provides for electrical isolation.

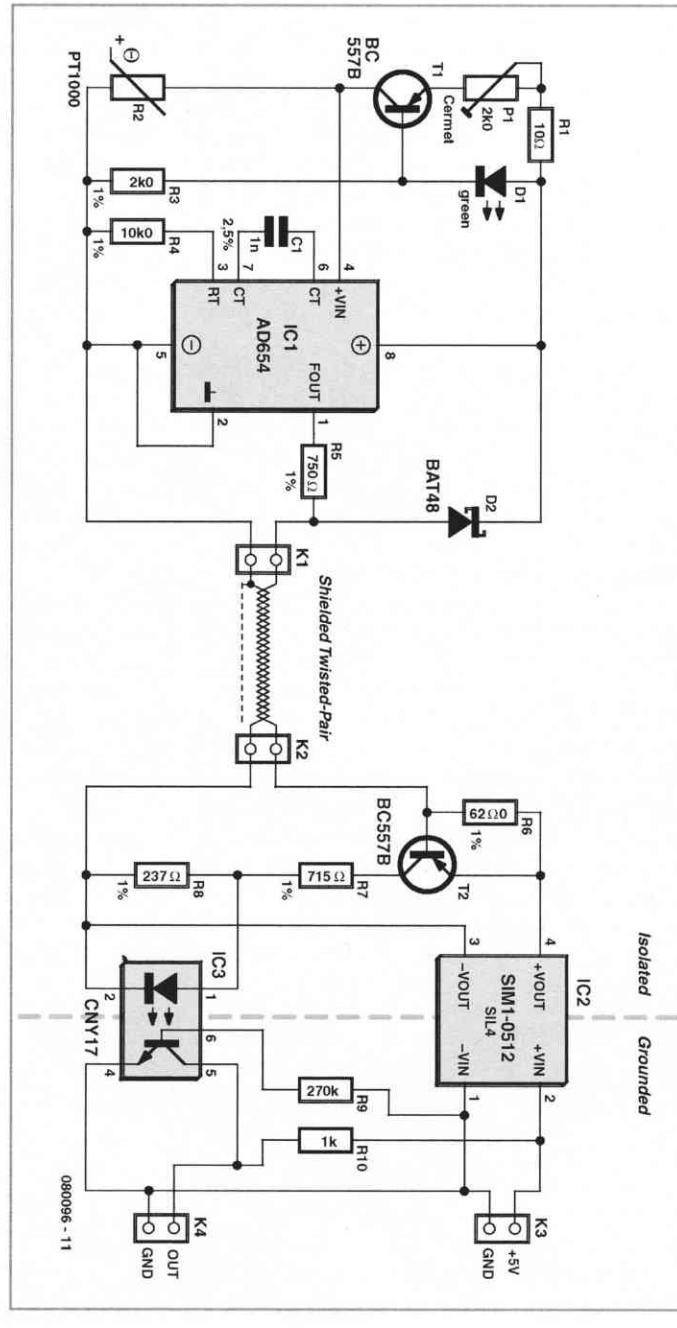

T1 forms a current source that delivers a constant current of 1 mA into the temperature sensor R2. The current can be adjusted for calibration using trimmer potentiometer P1. The voltage across the sensor is taken to the VIN input (pin 4) of the voltage- to-frequency converter IC1. R4 and C1 are chosen so that the conversion factor is 10 kHz per volt.

The temperature is given by the formula

$$T = \frac{f - 10000}{38}$$

where T is the temperature in °C and f the frequency in Hz.
The frequency therefore ranges from 8.8 kHz (at –30 °C) to 15.7 kHz (at +150 °C).

The output transistor of IC1 has its collector at pin 1 and its emitter at pin 2. Pin 1 is connected to the positive signal line via resistor R5, and pin 2 is taken directly to the negative signal line.

The demodulation function is carried out by the circuit around T2. The value of the current sense resistor R6 is chosen so that when converter IC1 is in its quiescent (off) state T2 is not switched on. When the output transistor of the converter turns on, extra current is drawn from the supply via R5, making the total current drawn considerably higher. In turn, the voltage drop across R6 increases significantly and T2 is turned on. A large collector current now flows through R7, R8 and the LED inside optocoupler IC3. The phototransistor inside the optocoupler is now also turned on. Finally, at connector K4 the signal is available with a low impedance, suitable for further processing.

So that we can arrange for the circuit to operate from a single supply we use an isolating DC-DC converter. This not only provides the 12 V needed by the sensor circuit, but also offers up to 1000 V of electrical isolation.

(080096-I)

191 Solar Cell Voltage Regulator

POWER SUPPLIES, BATTERIES AND CHARGERS

Reuben Posthuma

This device is designed to be a simple, inexpensive 'comparator', intended for use in a solar cell power supply setup where a quick 'too low' or 'just right' voltage indicator is needed. The circuit consists only of one 5-V regulator, two transistors, two LEDs, five resistors, two capacitors, and one small battery. Although a 4-V battery is indicated, 4.5 V (3 alkalines in series) or 3.6 V (3 NiCd cells in series) will also work.

The specifications of voltage regulator IC1 are mainly determined by the size and number of the solar cells and the current pull of the equipment connected to the output. Here the low-drop 4805 is suggested but other regulators may work equally well as long as you observe the output voltage of the solar cells. Transistors T1 and T2 are complementary types i.e. one each of the pnp and npn variety. Although the ubiquitous BC557B (pnp) and BC547B (npn) are indicated, any small-signal equivalents out of the junk box will probably do. The values of voltage dividers R1/R6 and R3/R4 may need to be adjusted according to the type of transistor and its gain, or according to the desired voltage thresholds. Using

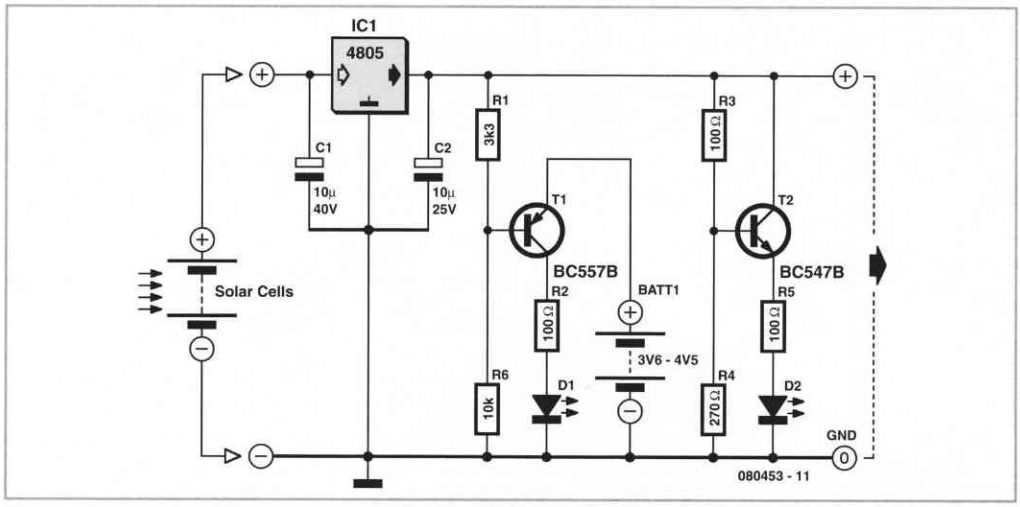

the resistor values shown in the schematic, LED D2 turns on fully when the voltage is just above 5 volts. LED D1 turns on when the voltage drops below 4.2 volts or so. Between those two thresholds, there is a sort of no man's land where both LEDs are on dimly.
A buzzer or other warning device could be connected across the terminals of LED D1 to give a more substantial warning if the voltage drops below operating limits.
The current consumption of the circuit is about 20 mA at 5 V, and it decreases with the voltage supplied by the solar cells.

(080453-I)

192 Car & Motorcycle Battery Tester

TEST AND MEASUREMENT

Joseph Zamnit

Going camping nowadays involves taking lots of electronic equipment whether for day to day running or for fun and entertainment. Most of the time a charged leadacid battery and a power inverter would be used to ensure a smoothly organised holiday where ideally the missus and the children cheerfully use their electric and electronic gear!
With rechargeable lead-acid batteries it's invariably useful – if not essential – to determine whether the power source you're hauling along on your travels is losing capacity and needs to be topped up. The same circuit would also come in handy when going on a car or motorbike trip as it can check the status of a 12 V (car) or a 6 V (motorcycle) battery. Although the circuit draws so little power that it will not noticeably load the battery under test, it should not be left connected permanently.
The circuit employs the familiar LM3914 (IC1) to display the voltage level. The LED readout creates a battery status readout: when the top LED lights, the battery is fully charged. When the bottom LED lights, the battery needs imminent charging!
Switch S1 selects between 12 V and 6 V operation. A series diode, D1, protects the bargraph driver from reverse supply voltage. A colour-coded display with individual LEDs could be used instead of the common-anode bargraph display for better indication of the state of the battery.

(080421-I)

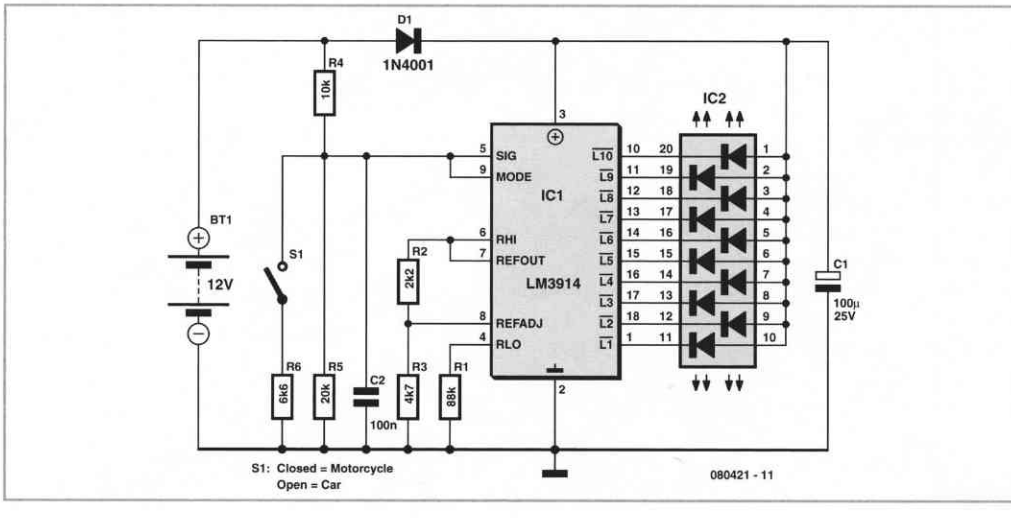

193 ZigBee Switching for Remote Control

Richard Hoptroff

The ZigBee standard defines data formats known as 'profiles'. These ensure that products produced by different manufacturers are interoperable.

One of the first data formats to be developed out was the Home Controls–Lighting (HCL) profile. This is designed for sending simple on/off messages, and its main purpose is designed to remove the need to run cables to wall-mounted light switches in buildings. However, that's not to say that you can't use it for switching anything else, for example, to add ZigBee remote control to your projects.

The Pixie Switcher from Flexipanel (*www.flexipanel.com*) is a commercially available HCL switching module with integral antenna and up to 8 switching control lines known as endpoints (EPs). When configured as an input, the endpoint voltage is monitored. If it changes state, a message is generated as required. 'On', 'off' and 'toggle' messages are supported by all devices using the HC-L profile. When configured as an output, the endpoint's digital output corresponds to the last message received from a switching input.

Input endpoints to output endpoints correlation is managed by one-time setup procedures called 'joining and binding'. When first powered up, a device will look for a ZigBee network to join. Security permitting, any router node can then allow the new node to become its neighbour in the network.
Once the new node has become a member of the network, its inputs and outputs must be 'bound' to corresponding outputs and inputs on other nodes in the network. This is achieved by pressing the 'bind' button on both devices at the same time.
One input can control multiple outputs and vice versa. For example, it would be quite feasible for a bedside or hallway switch to turn off all the lights in the house. A typical application circuit is shown in the schematics, where one Pixie Switcher unit has been configured to have two inputs and the other to have two outputs. This configuration must be done prior to placing the modules in the circuit shown, using the RxD and TxD serial interface pins (not shown).

Figure 1 shows the transmitter. The ModeA and ModeB pins are grounded, so the trans-

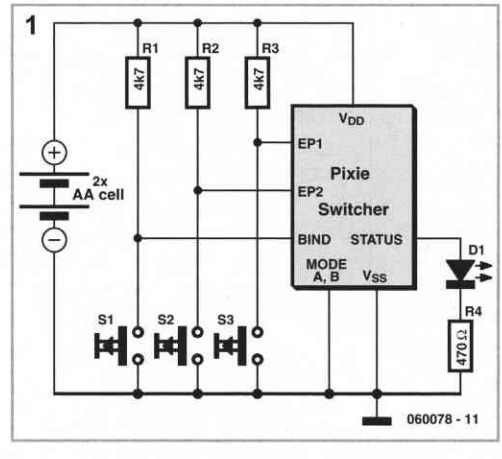

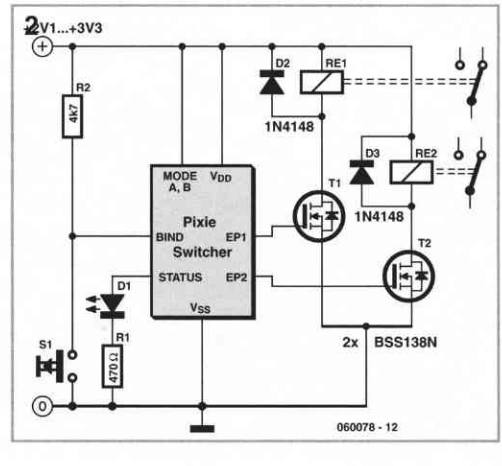

mitter will operate in sleep mode and only wake up when a button is pressed.
The modules can run at anything between 2.1 V and 3.3 V, so it can be connected directly to two AA batteries. The Bind input and Status LED are only used during joining and binding. When the pushbuttons connected to EP1 and EP2 are pressed, messages are transmitted to the receiver.

Figure 2 is the receiver. By setting ModeB high, it is configured as a router. This means it can allow battery powered sleeping devices (such as the transmitter) to join it as a neighbour.

Routers, however, must be always-on and so are not really suited to battery powering. ModeA is also wired High, indicating that this router is in fact a coordinator. The difference between the two is that when a coordinator powers up, it starts a new network instead of looking for an existing one to join. Every ZigBee network has one coordinator. If further routers nodes were added to this network, they would have to have the ModeA pin low. EP1 and EP2 on the receiver are connected to relays via MOSFET driver transistors. The relay contacts can then be connected to any project circuit.

(060078-1)

194 Telephone Ringer

HOME AND GARDEN

Christian Tavernier

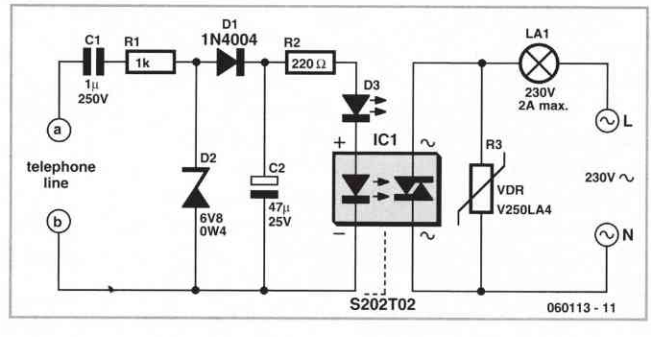

If you are lucky enough to have a big house, a large garden, and small children, this project just might interest you. It's actually a telephone ringer capable of making any mains-powered device work from the ringer of your fixed line. With it, you will be able to control a high-powered siren or horn, as you like, in order to relay and amplify the low-level sound of your telephone (making it audible in a big house or in a large garden)! Alternatively, you can make a lamp light (or an indicator light) and so create a 'silent ringer' (helpful when small children are napping). The other interesting part of this simple and inexpensive project is that it doesn't require a power supply, contrary to similar items on sales in the shops.

Before examining the drawing and understanding the principle involved, it is important to know that the ringer voltage on a fixed telephone line is pretty high. Since Europe and the EU Commission have not yet interfered, the exact value of this voltage and its frequency varies according to the country, but that's not important here. The line carries direct current whether unoccupied or occupied. Moreover, no more than a few hundred mAs needs to be stolen from an unoccupied telephone line to make the PSTN exchange believe the line is occupied.

Therefore, capacitor C1 has the dual role of insulating this project with respect to direct current present on the line while unoccupied, or while occupied, while also allowing the ringer current to pass. The latter is rectified by D1 and clipped by D2 which makes about 6 V DC available to the C2 terminals when a

ringer signal is present. This voltage lights LED D3 which only serves as a visual indicator of proper operation as does the LED contained in IC1. This is a high-power photo triac with zero crossing detection from the mains, which allows it to switch the load it controls without generating even the lowest level of noise. This component, that we might just as well call a solid-state relay, was selected because it is comes in the form of a package similar to a TO220, a little bigger, and equipped with four pins. The pinout will not cause confusion because the symbols shown on our diagram are engraved or printed on the packaging. Since this circuit is not yet very common, we need to mention that it's available from the Conrad Electronics website (*www1.uk.conrad.com*).

For the purpose of safe operation, the circuit is protected by a GeMOV on the mains side, called Varistor, VDR or SiOV depending on the manufacturer. The model indicated here is generally available. The load will be limited to 2 A, considering the model selected for IC1, which is more than sufficient for the application planned here.

Finally, since a number of components in this circuit are connected directly to the mains power supply, the assembly should be placed in a completely insulated housing for obvious safety reasons.

(060113-1)

195 Fog Lamp Switch

HOBBY AND MODELLING

J. Geene

In most countries it is now mandatory or at least recommended to have a rear fog light on a trailer with the additional requirement that, when the trailer is coupled to the car, the rear fog light of the towing car has to be off. The circuit shown here is eminently suitable for this application.

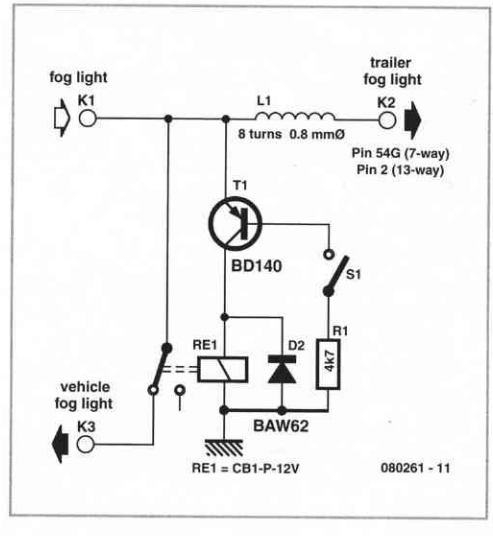

The circuit is placed near the rear fog light of the car. The 12-V connection to the lamp has to be interrupted and is instead connected to relay contacts 30 and 87A (K1, K3). When the rear fog light is turned on it will continue to operate normally. If a trailer with fog light is now connected to the trailer connector (7- or 13-way, K2), a current will flow through L1. L1 is a coil with about 8 turns, wound around reed contact S1. S1 will close because of the current through L1, which in turn energises relay Re1 and the rear fog light of the car is switched off. The fog light of the trailer is on, obviously. The size of L1 depends on reed contact S1.

The fog lamp is 21 W, so at 12 V there is a current of 1.75 A. L1 is sized for a current between 1.0 and 1.5 A, so that it is certain that the contact closes. The wire size has to be about 0.8 mm.

The relay Re1 is an automotive relay that is capable of switching the lamp current. The voltage drop across L1 is negligible.

(080261-I)

196 Lighting Governor

HOME AND GARDEN

Peter Jansen

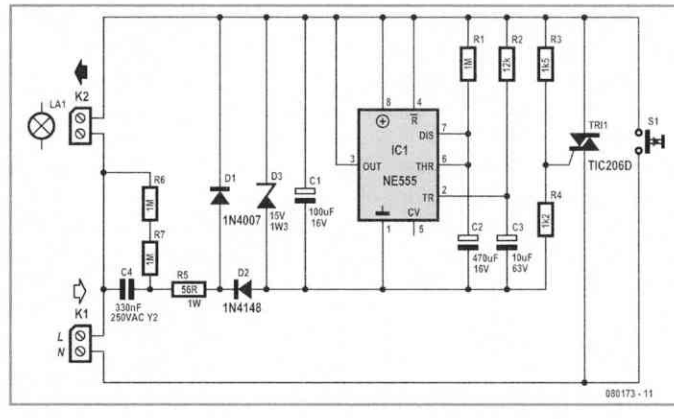

This circuit is very handy as a timer circuit for a lamp, for lighting a staircase, for example, but can also be used as indicator for the front doorbell. A significant advantage of this circuit is that the circuit draws almost no current when in the inactive state.

The circuit is activated with push button (S1), after which IC5 (a 555 timer IC) starts to count down the set time. During this time the triac continues to conduct and the lamp is turned on. The 'on' time of the lamp is on is determined by the combination of R1 and C2 and can be changed as required by your application or personal preference.

R2 and C3 have been added because the 555 expects a 'negative' pulse at its trigger input. When the power supply is turned on, C3 holds the TR input of the 555 Low for a short time, which triggers the timer IC.

Depending on the exact type (brand) of 555, the value of C4 (330 nF) may have to be changed to ensure a high enough power supply voltage when in the active state. Note also that you shouldn't use a 'too heavy' version of the triac. The circuit will drive at the most just a little more than 5 mA into the gate of the triac. The circuit worked properly when tested with a TIC206 and the slightly bigger TIC216.

When selecting push button S1, take into account the switching current of the lamp. The switch must be able to handle that safely.

In the event of a defective part, a 15-V zener diode is connected across the power supply for protection (D3). R6 and R7 have been added so that C4 will be discharged. In this way no dangerous voltage can remain when the circuit is unplugged. When large values for C2 are used, such as the 470 μF shown here, a good quality capacitor is required for C4. Any potential leakage resistance will then have no influence on the set time. Because of an inferior capacitor in our prototype the time was considerably longer than expected...

(080173-I)

197 Multicolour HD LED

COMPUTERS AND INTERNET

Andreas Köhler

Most PC enclosures provide only a single LED to indicate hard disk access, with the LED being connected to the motherboard via a two-pin connector. However, this LED only works with IDE drives, and if a SCSI disk controller is fitted, its activity will not be visibly

noticeable. This small circuit remedies that problem using a multicolour LED.

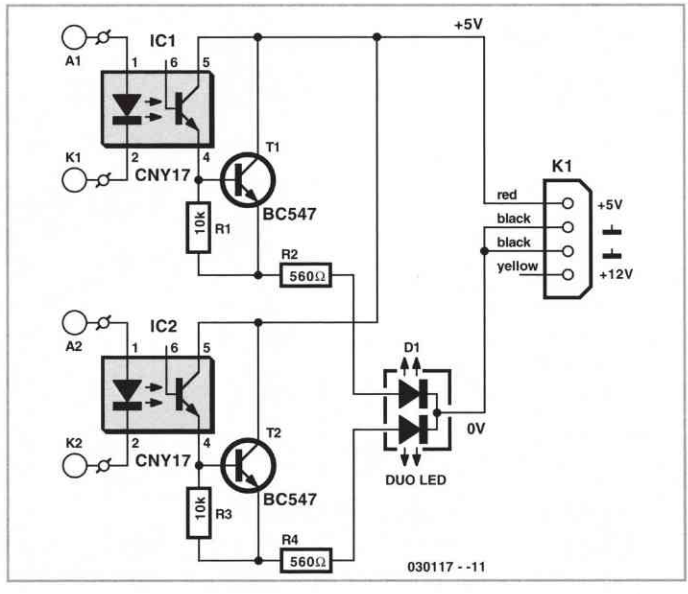

The activity LED for the IDE interface is usually driven by a connected device via one or more open-collector stages. It illuminates if either of the two possible IDE drives is activated.
The shared series resistor limits the current and also provides short-circuit protection. Even if the LED is shorted out due to faulty wiring, the current is restricted to a safe level.

An obvious solution would be to have the IDE and SCSI disks drive a shared dual LED, but unfortunately the current flows from the positive supply line through a series resistor, the LED and a transistor to ground. The dual LED would thus have to have a common anode, but no such device exists. All known multicolour LEDs have a common cathode lead. That means they cannot be connected directly, but we're not that easily defeated. Only a small additional circuit is needed to allow the LED to be driven by the different interfaces.

In this circuit, each of the drive signals from the two controllers is fed to an optocoupler, which acts nearly the same as the original LED. The somewhat lower voltage drop of the infrared LED results in a somewhat greater current, but there's hardly any need to worry about overloading. The optocouplers eliminate the problems with the different voltages. On the output side, a Darlington transistor consisting of the phototransistor and a BC547 drives the multicolour LED. The 10-kΩ resistor (whose value of is not critical) provides secure cut-off of the driver transistor. The base of the phototransistor in the CNY17 is left open.
The series resistors for the individual LED elements are dimensioned using the standard formula. It may be necessary to adjust their values slightly, depending on the relative brightness levels. The circuit can also operated from the +12-V line of the power supply if the values of the series resistors for the LEDs are suitably modified. If necessary, a third optocoupler stage can be added to allow a three-colour LED (red, green and blue) to be driven.

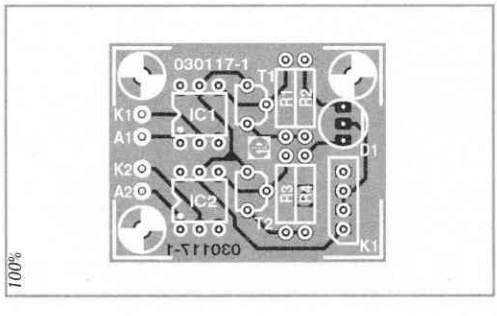

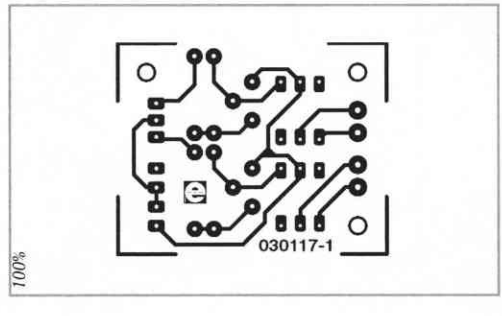

COMPONENTS LIST

Resistors:
R1, R3 = 10 kΩ
R2, R4 = 560 Ω

Semiconductors:
D1 = Dual LED with 3 pins
(Conrad Electronics # 187496)
IC1, IC2 = CNY17-2
T1, T2 = BC547B

Miscellaneous:
K1 = 4-way SIL connector
Small disk drive connector for PCB mounting, or solder pins (see text)
PCB, order code 030117-1 from the PCBShop

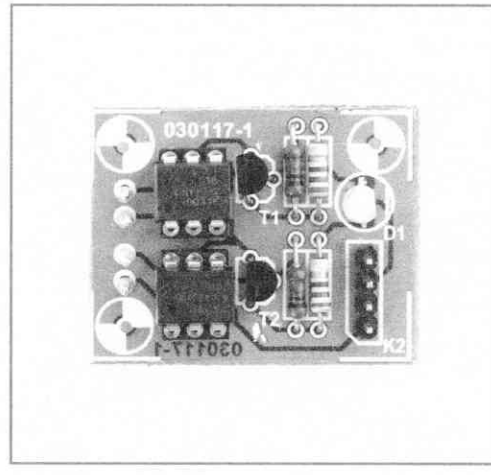

The circuit board has been designed to be so small that the components can be fitted in a few minutes and everything can be suspended from the LED in the PC enclosure. A drop of hot-melt glue will prevent the circuit board from becoming dislodged due to vibration.

The supply voltage reaches the circuit via a normal small drive connector, to make it easy to obtain the necessary plug. Otherwise, you can also use ordinary solder pins.

(030117-1)

198 Gratis Symmetrical Opamp Supply Voltages

POWER SUPPLIES, BATTERIES AND CHARGERS

Many ways to obtain a set of symmetrical supply voltages for operational amplifiers and comparators from a single +5-V supply voltage have been described already. The simplest option (including with regard to component availability and price) is to use a MAX232, which is available in the 16-pin DIP package for less than 30 p (50 eurocents).

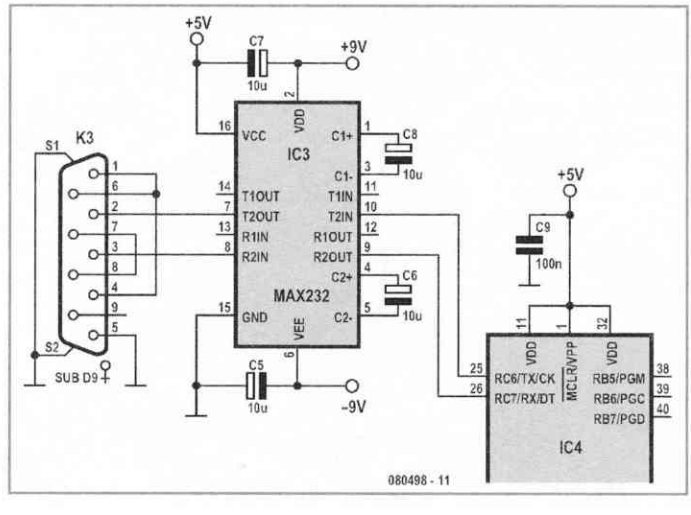

In nearly all microcontroller circuits with an RS232 port, this IC is already present anyway to provide level conversion between TTl signals (5 V) and RS232 signals (nominally ±12 V), so you can obtain a set of symmetric supply voltages for opamps almost free of charge.

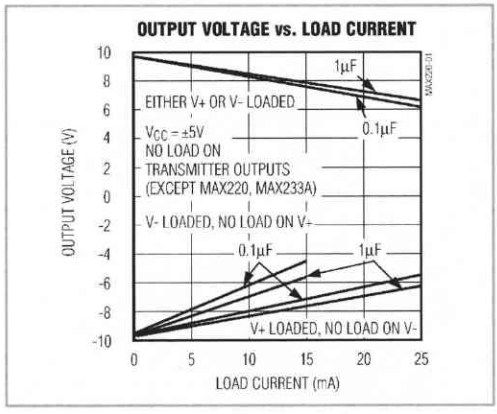

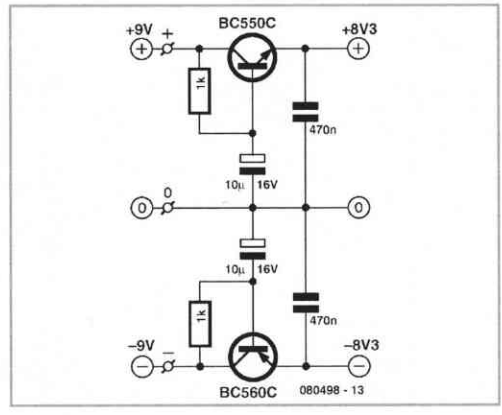

It's not even necessary to add any circuitry around the IC. **Figure 1** shows how a MAX232 is typically wired in a microcontroller circuit. The symmetrical voltages (at around ±9 V) generated from the +5-V supply voltage can be taken from pin 2 (V_{DD}; +9 V) and pin 6 (V_{EE}, –9 V) of the IC. As you can see from **Figure 2**, the no-load voltage is nearly 10 V and you can draw up to 5 mA at 9 V, which is enough for most standard opamps and plenty for low-power opamps.

The MAX232 has two charge pumps, each of which has two external capacitors for voltage doubling. These are 10-µF electrolytic capacitors in Figure 1, which yields a somewhat stabler output voltage than the standard circuit with 1 µF as shown in Figure 2. The charge pumps of the MAX232 are operated at an oscillator frequency of around 50 kHz, so the amount of ripple on the output voltage is quite small (typically less than 10 mV with a 2-mA load).

This means that in most cases you can manage without any additional filtering of the output voltage. In sensitive applications, such as amplification of small audio or measurement signals by one or more opamps, it's a good ideal to use a small gyrator circuit for additional suppression of the residual 50-kHz signal. **Figure 3** is an example of such a circuit that has been proven frequently in practice. Of course, you can use other types of complimentary small-signal silicon transistors, such as the BC547 (NPN) and BC577 (PNP), in place of the BC550 (NPN) and BC560 (PNP) shown on the schematic.

Transistors in the current gain class 'B' (such as the BC547B and BC557B) are also suitable, and the values of the capacitors between the bases of the transistors and ground can also be increased (e.g. 100 µF) or decreased (e.g. 1 µF). The voltage drop across the gyrator circuit is only around 0.7 V.

(080498-1)

199 Binary Clock

HOBBY AND MODELLING

Marco Freitag

Unusual clocks are not uncommon in *Elektor Electronics*. The version presented here is based on the binary clock (not yet on display) in the new Museum of Mathematics in Gießen, Germany [1], but it is entirely compatible with an ordinary living room. However, the hours, minutes and seconds have been further divided into units and tens to make them easier to read, which yields six columns: tens of hours, units of hours, tens of minutes, units

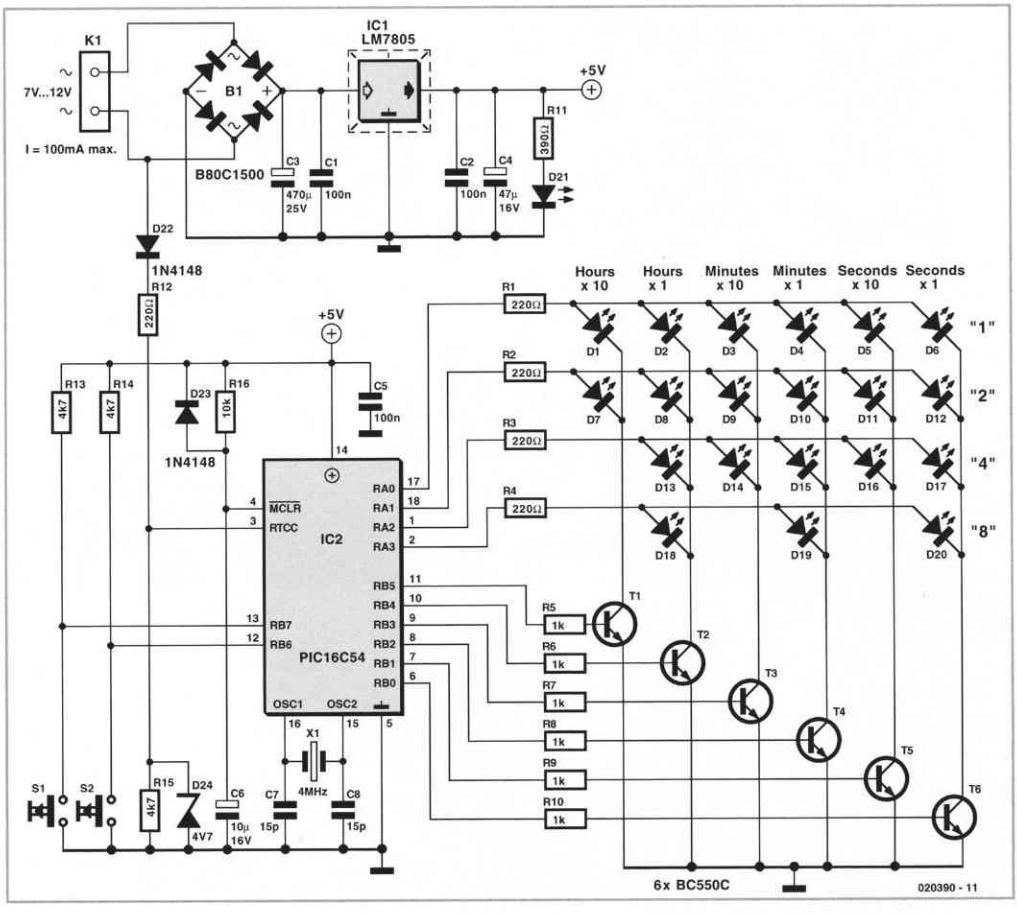

of minutes, tens of seconds, and units of seconds. The values are read row by row from top to bottom: one, two, four, and eight – in other words, binary. With a bit of practice, it's even possible to quickly and easily read the time in a single glance.

The supply voltage for the circuit comes from a simple mains adapter with an ac output voltage of 8–15 V at a maximum output current of 300 mA. The voltage **must not** be rectified, since the microcontroller uses the frequency of the ac voltage (50 Hz) as a clock signal with long-term stability. As PIC16C54 does not have enough output ports to individually

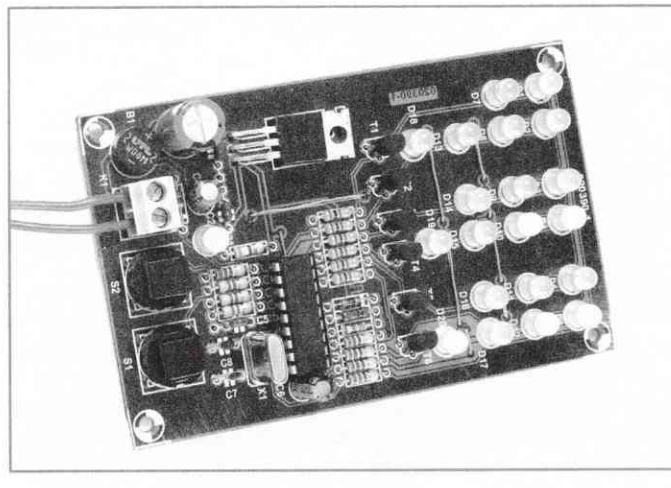

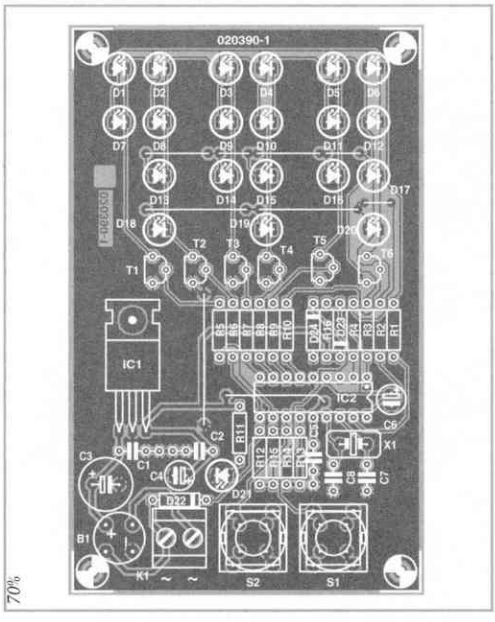

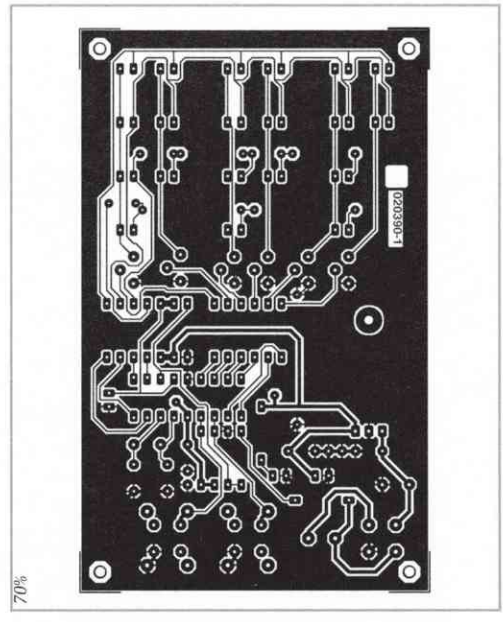

COMPONENTS LIST

Resistors:
R1-R4, R12 = 220 Ω
R5-R10 = 1 kΩ
R11 = 390 Ω
R13, R14, R15 = 4kΩ7
R16 = 10 kΩ

Capacitors:
C1, C2, C5 = 100 nF
C3 = 470 µF 25V radial
C4 = 47 µF 16V radial
C6 = 10 µF 16V radial
C7, C8 = 15pF

Semiconductors:
B1 = B80C1500 (80V piv, 1.5A)
D1-D20 = LED, low current, colour to personal taste
D21 = LED
D22, D23 = 1N4148
D24 = zener diode 4.7V, 0.5W
IC1 = LM7805
IC2 = PIC16C54-04/P (programmed, order code 020390-41)
T1-T6 = BC550C

Miscellaneous:
K1 = 2-way PCB terminal block, lead pitch 5mm
S1,S2 = pushbutton, 1 make contact
X1 = 4MHz quartz crystal
Project software on disk: order code 020390-11 or free download
PCB, order code 020390-1 from The PCBShop

drive all of the LEDs, and doing so would also require several additional components, the display is multiplexed. In order to nevertheless make the low-current LEDs nice and bright, the magnitude of the current pulses is made significantly higher than the rated current.

Buttons S1 and S2 can be used to set the time. If you press S2, you will arrive at the setting menu after a brief LED test (all LEDs on). The value of the first column can now be set to any desired value using S2.

Pressing S1 takes you to the next column. This continues in the same manner until the configuration mode is exited after the final column. The clock will continue to run, starting with the newly set value.

We have designed a printed circuit board layout for the binary clock. Fitting the components to the board couldn't be easier, although you mustn't overlook the set of nine wire bridges. As one of them is underneath the microcontroller, the latter must be fitted with a socket.

The LEDs should initially be fitted with only one lead soldered in place, after which they must be aligned. The remaining leads should only be soldered after the LEDs are all nicely lined up.

The board can be displayed 'bare' or fitted into a small plastic enclosure. A transparent enclosure is quite practical, since it eliminates the need to drill holes for the LEDs.

(020390-1)

Web Link
[1] *www.mmgi.de/htdocs/mathematikum/index.php?513*

200 Earth Fault Indicator

POWER SUPPLIES, BATTERIES AND CHARGERS

Christian Tavernier

The security of many electrical devices depends today on the availability of an earthed mains outlet. We should remember that these are connected to the frame or to the metal housing of the equipment and so it routes to the protective earth (PE) connections. In this setup, mains voltage, however small, will cause the differential circuit breaker to trip. The circuit breaker is part of any modern electrical installation.

This type of security device may however become defective due to common corrosion as we have seen many times on various older household devices, as well as on construction sites. Actually, since these devices are frequently in wet conditions, the screw and/or lug used to connect the earth wire to the device frame corrodes gradually and ends up breaking or causing a faulty contact. The remedy is then worse than the problem because the user, thinking that he/she is protected by earth, does not take special precautions and risks his/her life.

However, all that's needed is an extremely simple system to automatically detect any break in the earth connection; so simple that we ask ourselves why it is not already included as part of all factory production for appliances that carry any such risk, as we have discussed above. We propose it as a project for you to build using this schematic.

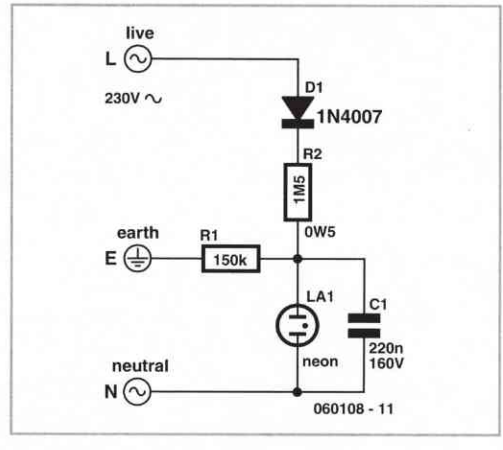

The live wire (L) of the mains power supply is connected to diode D1 which ensures simple half-wave rectification which is sufficient for our use. The current which is available is limited to a very low value by resistor R2. If the appliance earth connection to which our circuit is installed is efficient, this current is directed to earth via resistor R1 and the rest of the circuit is inactive due to insufficient power.

If the earth connection is disconnected, the current supplied by D1 and R2 charges up capacitor C1. When the voltage at the terminals of the capacitor reaches about 60 volts, neon indicator light La1 is turned on and emits a flashing light which discharges capacitor C1 at the same time. This phenomenon is reproduced indefinitely as long as the earth con-

nection has not been restored, and the neon light continues to flash to attract attention in case of danger.

Building the project is not particularly difficult but, since it is a project aimed at human safety, we must take the maximum of precautions concerning the choice of components utilised. Therefore, C1 must have an operating voltage of at least 160 volts while R2 must be a 0.5-watt resistor, not for reasons of power dissipation, but in order to maintain the voltage. The neon light can be any type, possibly used, or it may be part of an indicator light to make it easier to attach to the protected appliance. In the second case, we must obviously get rid of its series resistor which would prevent proper operation here.

During installation of the circuit in the appliance to be protected, we should also clearly mark Live (L) and Neutral (N) (for example, seek Live with a simple screwdriver) because inverting these two wires at this point will disable proper operation.
The final point, which is self-evident considering the principle used here: the earth connection for our setup must be hooked up to the frame of the appliance to be protected at a different point than where the normal earth wire is connected.

www.tavernier-c.com (060108-1)

201 LM35 to ADC

TEST AND MEASUREMENT

Uwe Reiser

The circuit described here is designed to be used with the 'LED Thermometer' (see page 325), but can also be used as a signal conditioner for connection to any analogue-to-digital converter (ADC). The circuit is sufficiently interesting in itself that we have decided to describe it separately.

The familiar and popular LM35 temperature sensor produces an output voltage that varies by 10 mV per kelvin over a temperature range of –55 °C to +150 °C. This is not suitable for

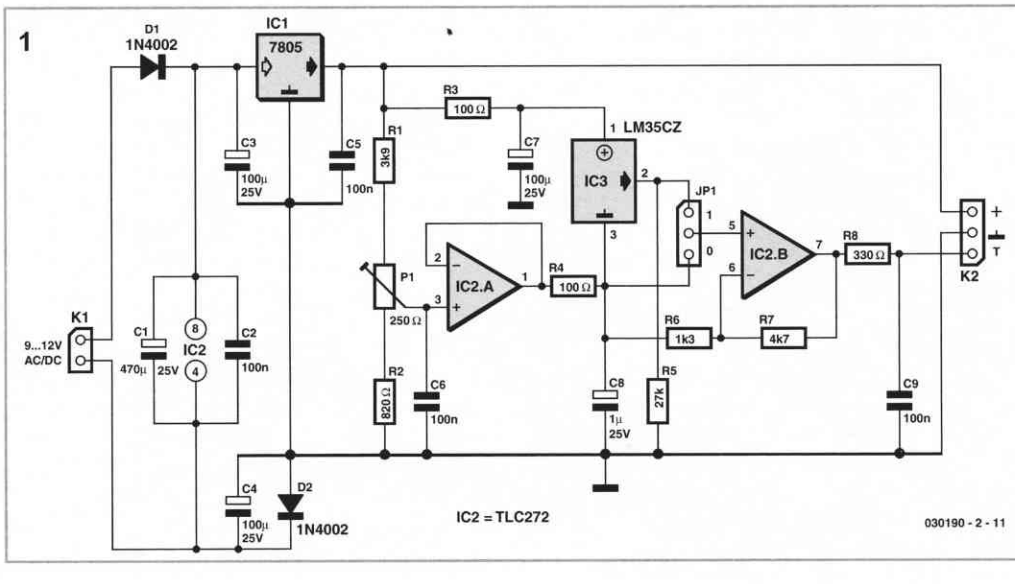

driving an ordinary unipolar input of an analogue-to-digital converter with an input range of 0 V to 5 V: we need to add an offset to the sensor voltage and then amplify it.

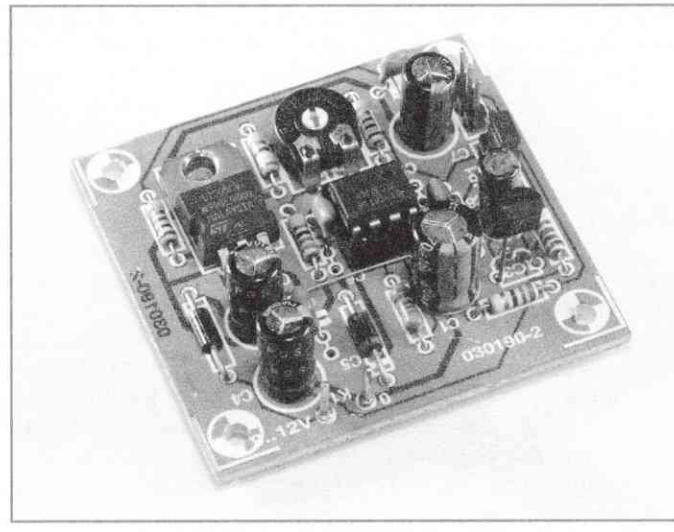

That covers the two main parts of the circuit diagram shown in **Figure 1**.
The circuit is designed to allow a measurement range of –24 °C to +84 °C. Over this range, the output voltage of the sensor varies from –240 mV to +840 mV. Both these values must be shifted by a further 0.5 K (or 5 mV) to allow for an extra half a degree at either end of the range. This gives a total voltage range of 1090 mV, and hence a necessary gain of A = 5000 mV / 1090 mV = 4.587. Amplification is done by IC2.B, whose gain is given by A = R7 / R6 + 1. The voltage offset is generated by IC2.A, which shifts the ground of the LM35, to which its output is referred, to a potential of 245 mV × 4.587 = 1124 mV relative to the circuit ground. Overall, this

COMPONENT LIST

Resistors
R1 = 3kΩ9
R2 = 820 Ω
R3, R4 = 100 Ω
R5 = 27 kΩ
R6 = 1kΩ3
R7 = 4kΩ7
R8 = 330 Ω
P1 = 250 Ω preset

Capacitors
C1 = 470 µF 25V
C2, C5, C6, C9 = 100 nF
C3, C4, C7 = 100 µF, 25V
C8 = 100 F, 25V

Semiconductors
D1,D2 = 1N4002
IC1 = 7805
IC2 = TLC272
IC3 = LM35CZ

Miscellaneous
K1 = 2 solder pins
K2, JP2 = 3-way pinheader
1 Jumper

2a

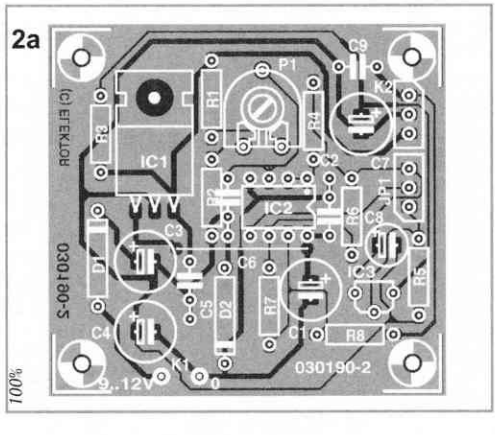

2b

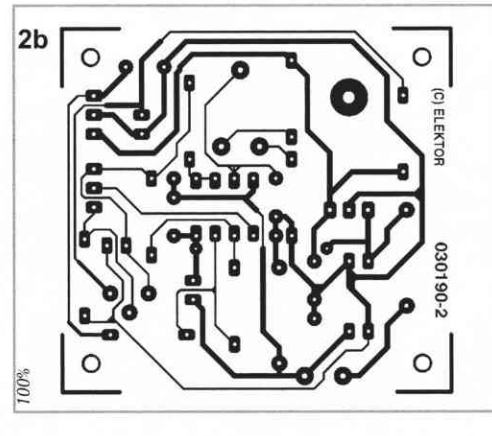

means that the voltage at the output of IC2.B is exactly 0 V at a temperature of –24 °C and 5 V at +84 °C.

These two formulae can be used to select component values for any desired temperature range. Calculating suitable values for the voltage divider formed by R1, P1 and R2 is straightforward. Jumper JP1 allows the circuit to be calibrated: connecting the output of the offset opamp IC2.A directly to the input of amplifier IC2.B simulates the condition of being at the lower extreme of the temperature range.

The circuit is powered from a mains adaptor with an output of 9 V to 12 V (either AC or DC). Although the current consumption is only around 50 mA, a 1 A fixed voltage regulator is used to produce a stable 5 V supply, since no heatsink is then required. The regulator directly supplies the voltage divider for IC2.A and can also provide power for a connected ADC circuit. The supply for the sensor is decoupled from the rest of the circuit by R3 and C7 to reduce interference. Diode D1 operates either as a rectifier (when an AC supply is used) or as protection against reverse polarity (when a DC supply is used). To avoid the need to use rail-to-rail opamps, diode D2 is used to lift the circuit ground to approximately 0.7 V above the IC's negative supply.

The sensor electronics can be built on the small printed circuit board shown in **Figure 2**. There is a single wire link, between C3 and IC2. It is worth pointing out that not only the sensor, but also all the other components, must be capable of operating over the desired temperature range. The 'C'-suffix versions of the sensor are specified to work from –40 °C to +110 °C, while the 'D' versions are specified to work from 0 °C to +100 °C. The overall accuracy of the thermometer is highly dependent on the precision of the components used. In particular, R6 and R7 should be as close as possible to their calculated values. The output voltage of the regulator is also important if it is used as the reference voltage for the A/D converter. Deviations from nominal values will result in an expansion or a compression of the overall temperature scale.

(030190-II)

Internet Link
www.national.com/pf/LM/LM35.html

202 Recycling Flasher Lights

HOBBY AND MODELLING

Gérard Guilhem

During the Christmas holidays, you lose count of the number of homes lit up like Christmas trees, like fireflies by the thousands which twinkle and flash, outlining words, the shape of designs, characters, or animals.

We are proposing a garland of lights you will not find at your neighbour's house and at the same time to do something good for the environment— because we are going to recycle. The string described here is only composed of electronic photo flasher lights. Only the richest municipalities have the potential to buy this type of decoration due to its hefty price tag, but we are going to make the same at a ridiculously low price.

First step: go to a photographer's shop and kindly ask the shop owner or staff to set aside some used, disposable flash cameras. Staff will normally be very happy to do that because, in any case, these units end up in the trash after being processed. You will need about twenty at least, preferably of the same type, that will make the task easier.

Second step: open each camera, remove the battery, discharge the capacitor (one never

knows) and finally, remove the electronic flasher board. Two possibilities: the printed circuit is small and can therefore be used as such after a small modification, or the printed circuit is too big which will force you remove the components you'll be using on a board of your own design.

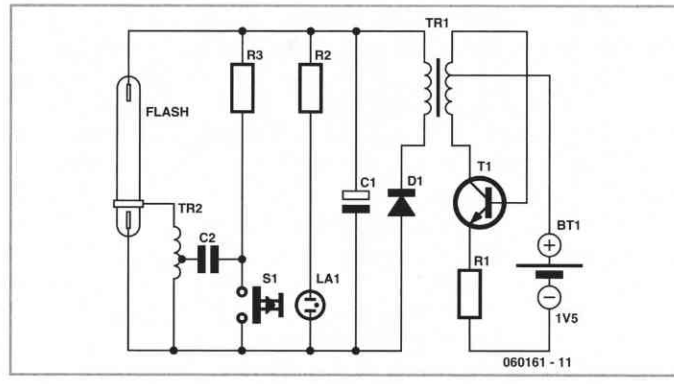

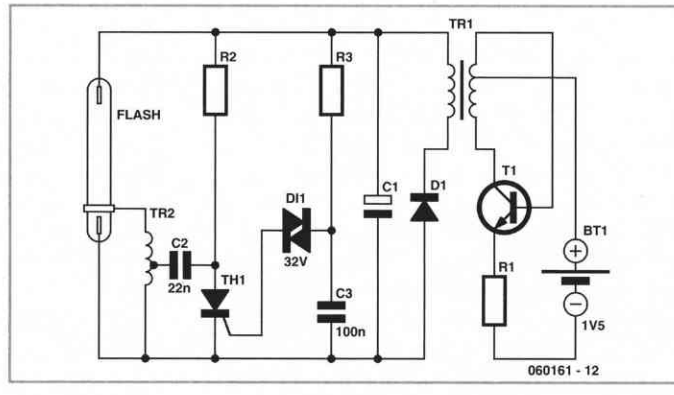

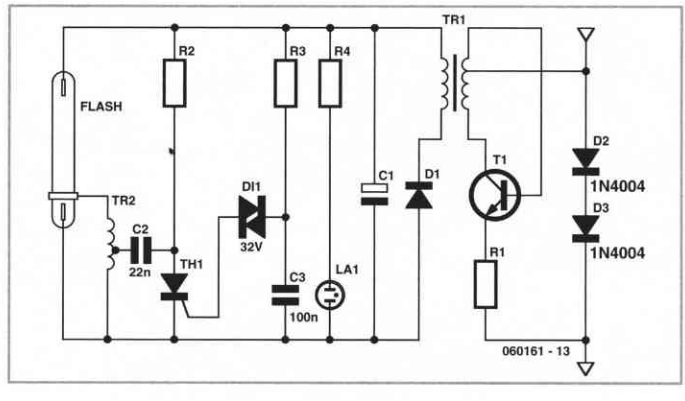

You should start by copying the diagram and identifying the components. 95% of flasher boards are designed based on the diagram in **Figure 1**.

There are several variations, some surprisingly complex for a disposable module, including a measurement cell and a thyristor, for example. Do not use that kind of model.

It is difficult to imagine a simpler diagram. Transistor T1 is the only active component. Helped by TR1 and R1, it produces approximately 300 V from 1.5 volts supplied by the alkaline battery.

C1 charges progressively and the neon miniature 'Ready' lamp La2 lights up to signal that the energy stored is sufficient to obtain a good flash.

In parallel, and even more rapidly, C2 is charged via TR2 and R3. All that's left to do is wait for the amateur photographer to press button S1, which has the effect of discharging C2 into TR2 that produces the high-voltage pulse necessary to fire neon flashlight La1.

That is precisely what we need, in detail: we are not going to spend the entire evening pressing different buttons to trigger the flash. Therefore, we have to find an automated technique for this process by giving it a somewhat random character.

The result of all these reflections take the shape of the diagram in **Figure 2** which, as compared with the first diagram, has three new components (after having lost two, now useless!).

Thyristor Th1 will be charged from triggering, as soon as the voltage at C3 terminals,

charged via R3, exceeds the firing threshold of the diac DI1 which supplies the trigger current.
A judicious choice of values for R3 and C3 makes it possible to have one flash per second. In order to avoid too high energy consumption, the value of C1 is adjusted to 4.7 μF, even 10 μF, for nicely padded flashes without using too much current.

You will, no doubt, have noticed the absence of the neon miniature bulb and its resistor which are no longer useful.

Last problem to solve: the power supply. We are not going to interrupt the New Year's Eve party to replace used batteries. It is out of the question to power the setup from 1.5 V as the number of flashes we are dealing with, the current would be too high. It would be better to supply 1.5-V voltage to each module, the modules being mounted in series, taking care to limit the current to approximately 500 mA. As illustrated in the partial diagram of **Figure 3**, we will provide each module with a pair of 1N4001 diodes that will produce a drop in voltage between 1.3 V and 1.4 V, and that works out perfectly.
The flashers are mounted in series on a wire whose two end points are connected to a DC power supply. We should account for about 1 V per module. We can actually consider that the majority of flashes will occur during charging and will only reach the 1.4 V level a few tenths of a second before the actual flash, the average voltage being around 1 V. It's reasonable to reserve 24 V for 20 flasher units, with a protection resistor of about 10 Ω to limit the current surges, not forgetting a 1-amp fuse.
The best result will be obtained using an adjustable constant current power supply between 0.5 and 1 A, which allows us to play with the flash frequency. The number of flashes is obviously a function of the current supplied.
It is recommended, for safety reasons, to stay below 40 volts. This corresponds to close to 40 flashlamps (and a few evenings to set them up), but since we still have quite a few months before the holiday season...

What remains is the 'packaging'. Everything depends on the size of the finished module. You could potentially use housing for translucent film in which you drill two holes to force the wires through and ensure an airtight seal.
Another option is translucent heat shrink tubing of the proper size. We will cut an adequate length of tubing, or 4 cm more than the length of the module. The wires are coated with a drop of heat shrinkable glue, then the tubing is retracted. The end is immediately flattened using a flat clamp until totally cooled. Repeat for the other end. This should make for a good airtight seal.
A purposely designed printed circuit will allow you to reduce the size of the module to a minimum.
Average consumption is approximately 12 watts for 20 flasher modules, which is perfectly reasonable and the result obtained is surprising, original and superb.

(060161-1)

203 Assistance for BASCOM Programmers

COMPUTERS AND INTERNET

Jochen Brüning

It is often useful to be able to display the values of certain variables or intermediate results during program execution when developing microcontroller software. This information can be invaluable especially when the program is not behaving entirely as you had anticipated.

Applications using larger microcontrollers often already incorporate some form of liquid

crystal display in the design so in this case it is reasonably easy to write a routine to display these intermediate values just for the purposes of program development.

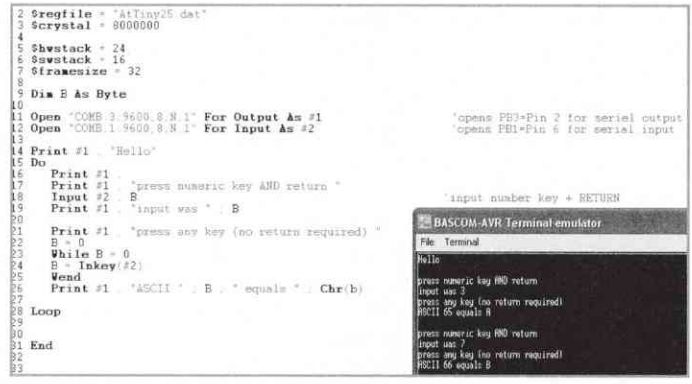

When your design uses one of the smaller microcontrollers like the ATtiny 25/45/85 series there are so few I/O pins available that it is impossible without additional hardware to provide a connection to an additional LCD even by using 4- bit addressing.

For designs using these tiny controllers the BASCOM programming environment can offer significant advantages; its compiler includes a software UART which provides a simple, flexible and 'reusable' solution to the problem by enabling data to be sent to and from the controller using its built-in terminal emulator program. It is only necessary to assign a single controller pin for the send and another for the receive serial data path. This approach gives far greater flexibility for the circuit layout when compared to microcontroller designs which use a hardware USART with its predefined pin assignments.

The connection between the controller and PC can be made using a USB port where it will be necessary to use a USB to TTL adapter cable like the one manufactured by FTDI and featured in the June 2008 edition of *Elektor* (page 48). An even simpler solution is to use the spare serial port (RS232) on the PC, it will only be necessary to convert the signals from the TTL levels required by the controller to the RS232 levels used by the PC.

A suitable circuit can be built using a MAX232 IC together with four capacitors. The author was able to make use of a cable taken from a redundant serial PC mouse. The 9-way D-type connector was fully encapsulated so it was necessary to solder the IC together with the capacitors into the cable and protect the circuit with a length of heat-shrink sleeving. Details of the construction can be found in a PDF document which is available from the Elektor website.

The only additional software required by the controller are the OPEN instructions which are used to configure the software UART. This instruction sets parameters such as baud rate, parity and the number of stop bits for the serial communication channel. In addition it defines which controller pin is used for communications and also the data direction (send or receive).

Two OPEN statements are therefore necessary; one to set up the transmitted data path and the other for the received data.

For example an instruction to configure data transfer from the controller to the terminal emulator:

```
Open "COMB.3:9600,8,N,1" For
   Output As #1
```

B.3: indicates that port B.3 is used which is pin 2 of a ATtiny25 controller.
Output indicates that data is sent from port B.3.
#1: File handle, used in the following Print command.

Data can now be sent using the normal Print command:

```
Print #1 , "Hello" ;
   The variable to display
```

#1 references the corresponding Open statement above.
It is helpful to use a simple test program just to output some text. This will determine whether the parameters defined in the Open-statement and the terminal emulator (found under 'Tools' along the top of the screen or invoked with ctrl + t) are correctly configured and also if the cable is connected to the correct controller pin. There are different ways of sending variables to the controller; firstly it is necessary to use the Open statement to configure the Input and choose a different file handle (e.g. #2) in the Input or Inkey statements as in:

```
Open "COMB.1:9600,8,N,1" For
   Input As #2 'PB1 (=Pin 6 of the
   ATtiny25) for the serial input

Input #2 , Variable store      or

Variable store = Inkey(#2)
```

The input of data must be terminated with a RETURN. Inkey will return a value of 0 if there is no character waiting i.e. no key has been pressed. For further information refer to the BASCOM online help pages.

The screenshot shows a small test program listing together with the program output in the terminal emulator window. The hex file of this program is available for free download from the Elektor website, the file number is 080370-11.zip.

(080370e)

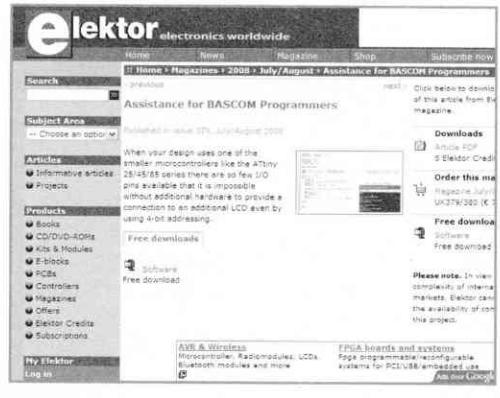

204 RC Switch

HOBBY AND MODELLING

Paul Goossens

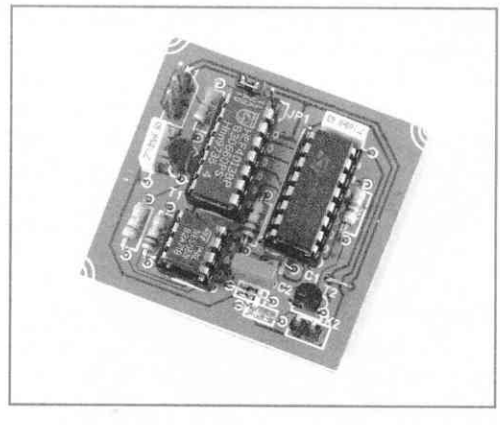

It is sometimes necessary for an RC (remote control) model to contain some kind of switching functionality. Some things that come to mind are lights on a model boat, or the folding away of the undercarriage of an aeroplane, etc. A standard solution employs a servo, which then actually operates the switch. Separate modules are also available, which may or may not contain a relay.

A device with such functionality is eminently suitable for building yourself. The schematic shows that it can be easily realised with a few standard components.
The servo signal, which consists of pulses from 1 to 2 ms duration, depending on the desired position, enters the circuit via pin 1 of connector K1. Two buffers from IC2 provide the necessary buffering after which the signal

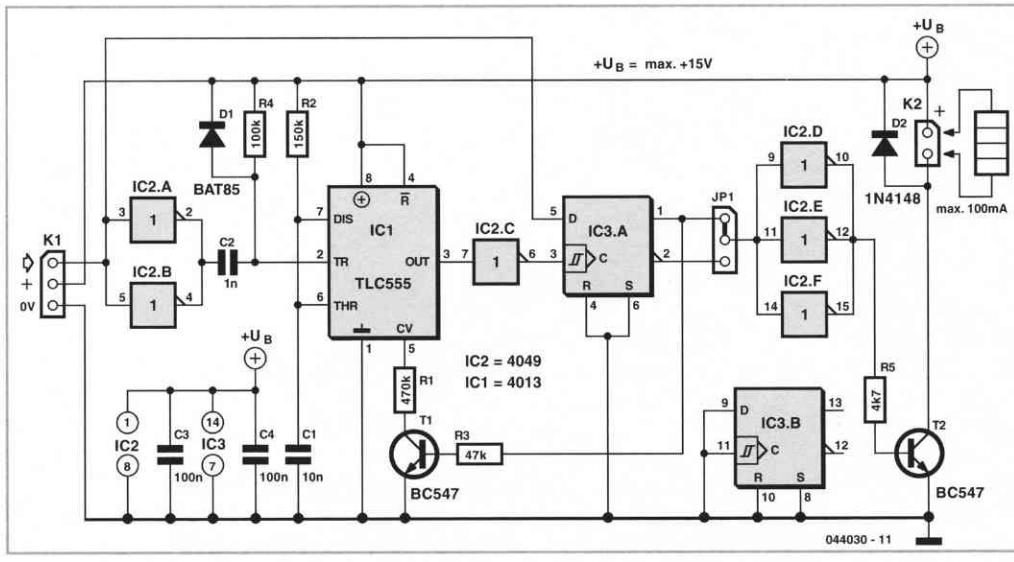

is differentiated by C2. This has the effect that at each rising edge a negative start signal is presented to pin 2 of IC1. D1 and R4 make sure that at the falling edge the voltage at pin 2 of IC2 does not become too high.

IC1 (TLC555) is an old faithful in a CMOS version. A standard version (such as the NE555) works just as well, but this IC draws an unnecessarily high current, while we strive to keep the current consumption as low as possible in the model.
The aforementioned 555 is configured as a one-shot. The pulse-duration depends on the combination of R2/C1. Lowering the voltage on pin 5 also affects the time. This results in reducing the length of the pulse. In this circuit the pulse at the output of IC will last just over 1.5 ms when T1 does not conduct. When T1 does conduct, the duration will be a little shorter than 1.5 ms. We will explain the purpose of this a little later on.

Via IC2.C, the fixed-length pulse is, presented to the clock input of a D-flip-flop. As a consequence, the flip-flip will remember the state of the input (servo signal). The result is that when the servopulse is longer than the pulse form the 555, output Q will be high, otherwise the output will be low.

It is possible, in practice, that the servo signal is nearly the same length as the output from the 555. A small amount of variation in the servo signal could therefore easily cause the output to 'chatter', that is, the output could

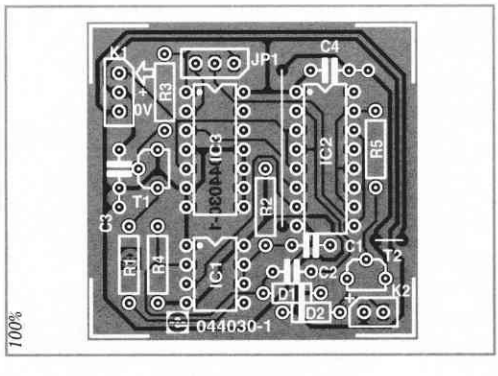

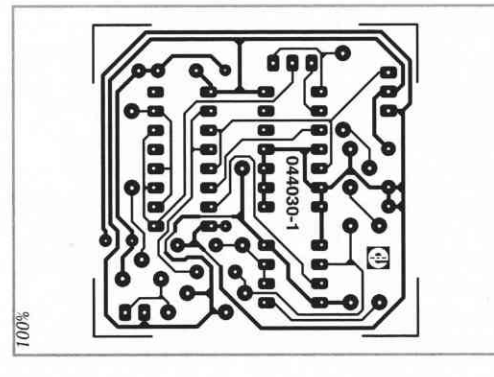

COMPONENTS LIST

Resistors:
R1 = 470 kΩ
R2 = 150 kΩ
R3 = 47 kΩ
R4 = 100 kΩ
R5 = 4kΩ7

Capacitors:
C1 = 10 nF
C2 = 1 nF
C3, C4 = 100 nF

Semiconductors:
D1 = BAT85
or similar Schottky diode
D2 = 1N4148
IC1 = CMOS 555
(e.g., TLC555 or ICM7555)
IC2 = 4049
IC3 = 4013
T1,T2 = BC547B

Miscellaneous:
JP1 = jumper with 3-way pinheader
K1 = servo cable
K2 = 2-way pinheader or 2 solder pins
PCB, available from The PCBShop

be high at one time and low the next. To prevent this chatter there is feedback in the form of R1, R3 and T1. This circuit makes sure that when the flip-flip has decided that the servo-pulse is longer than the 555's pulse (and signals this by making output Q high), the pulse duration from the 555 is made a little shorter. The length of the servo-signal will now have to be reduced by a reasonable amount before the servo-pulse becomes shorter than the 555's pulse. The moment this happens, T1 will stop conducting and the mono-stable time will become a little longer. The servo-pulse will now have to be longer by a reasonable amount before the flipflip changes back again. This principle is called hysteresis.
Jumper JP1 lets you choose between the normal or inverted output signals. Buffers IC2.D through to IC2.F together with R5 drive output transistor T2, which in turn drives the output. Note that the load may draw a maximum current of 100 mA. Diode D2 has been added so that inductive loads can be switched as well (for example, electrically operated pneumatic valves).

(044030-1)

205 Measuring Battery Charge

POWER SUPPLIES, BATTERIES AND CHARGERS

It is not generally known that it is possible to ascertain the extent of charge of a battery with a standard digital voltmeter. It does not apply to all kinds of battery, but it does to, for instance, Lithium-ion batteries.

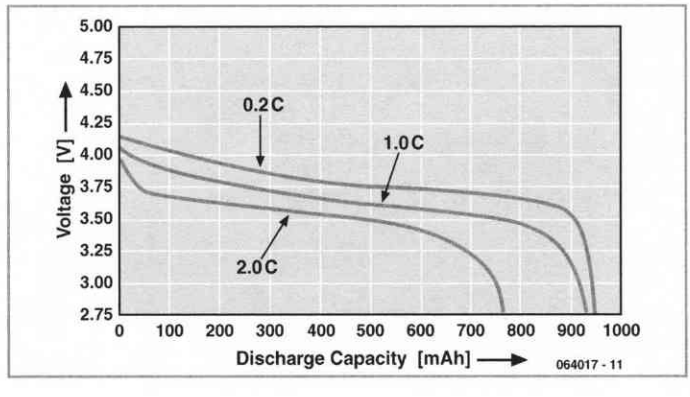

Although there are quite a few different types of Li-ion batteries, it is possible to generalize to a degree. The graphs in the figure (from Panasonic) show clearly that the terminal voltage of the cell drops in direct relation to the diminution of the charge. This means that a simple voltage measurement suffices to de-

termine the state of charge of the battery. Note that the figure shows three graphs each relating to a given load. This means that the output voltage must be measured under load conditions to obtain a satisfactory result. Moreover, the value of the load must be known. Also, the battery must be under load for at least a minute.

There are two ways to proceed. If the load is known and constant as, for instance, in a pocket torch, measure the voltage and read the corresponding charge from the graph. If there is no load, or it is not known or variable, apply a temporary load in the form of a resistor. If the value of this is 20 Ω, for instance, use the upper graph (0.2 C, 180 mA). If a single resistor is used, this will get quite hot, because it has to dissipate 0.66 W, whereas most standard resistors are only rated at 0.25 W to 0.33 W. It is therefore wise to use a number of resistors in parallel, for example, five of 100 Ω each.

To obtain more exact measurements, first draw the graph of your particular battery. Charge it fully and then connect the load, for instance, the five 100 Ω resistors. Measure the output voltage every five minutes and enter the results on an Excel sheet to give a nice curve. If the 5-minute intervals are not exact, enter the real times and choose 'spread' as curve. Only this type of sheet can cope with irregular measurement intervals. Moreover, Excel is able to transpose the time on the horizontal (x-) axis into charge.
Calculate the current during an interval by dividing the mean voltage (start voltage plus final voltage divided by 2) by the resistance. The charge is the current thus computed times the elapsed time. The graph shown applies to a battery of 900 mAh. A current of 0.2 C is then 0.2 × 900 = 180 mA; 1 C is 900 mA; 2 C is 2 × 900 = 1.8 A.

The proposed method is not suitable for NiCd or NiMH batteries, but it is for lead-acid batteries, provided that the temperature is constant. Bear in mind that an old lead-acid battery has a slightly different graph from a new one.

(064017-1)

206 Smart Chocolate Block

HOME AND GARDEN

Edmund Martin

What can be done, when two light bulbs in one light fitting are to be switched separately, but only one switch circuit is available? Simple: build a 'smart chocolate block' into the ceiling rose! The circuit is built from discrete components and with a bit of ingenuity can be fitted onto a printed circuit board measuring just a centimetre or two square.

When light switch S1 is operated for the first time lamp La1, which is connected in the usual way, lights; La2 remains dark. Electrolytic capacitor C1 starts to charge via rectifier diode D1 and resistors R1 and R2 until zener diode D3 conducts, limiting the voltage to about 6.8 V. This voltage is used as a supply for the rest of the circuit. The second lamp is connected via a triac and a fuse (1.5 A, medium speed recommended). The triac is triggered by T4, which can only happen when T3 does not pull its base down to ground. The first time the circuit is switched on this is the case, as we shall see below.

Transistors T1 and T2 form a bistable flipflop with a well-defined power-up state. R14 and R15 cause both transistors to be initially turned off. As the voltage across C1 rises, transistor T1, driven via resistors R7 and R9, turns on. The base drive for transistor T2, which is provided via D2, the low-pass filter formed by R6 and C2, and R5, would arrive a little later,

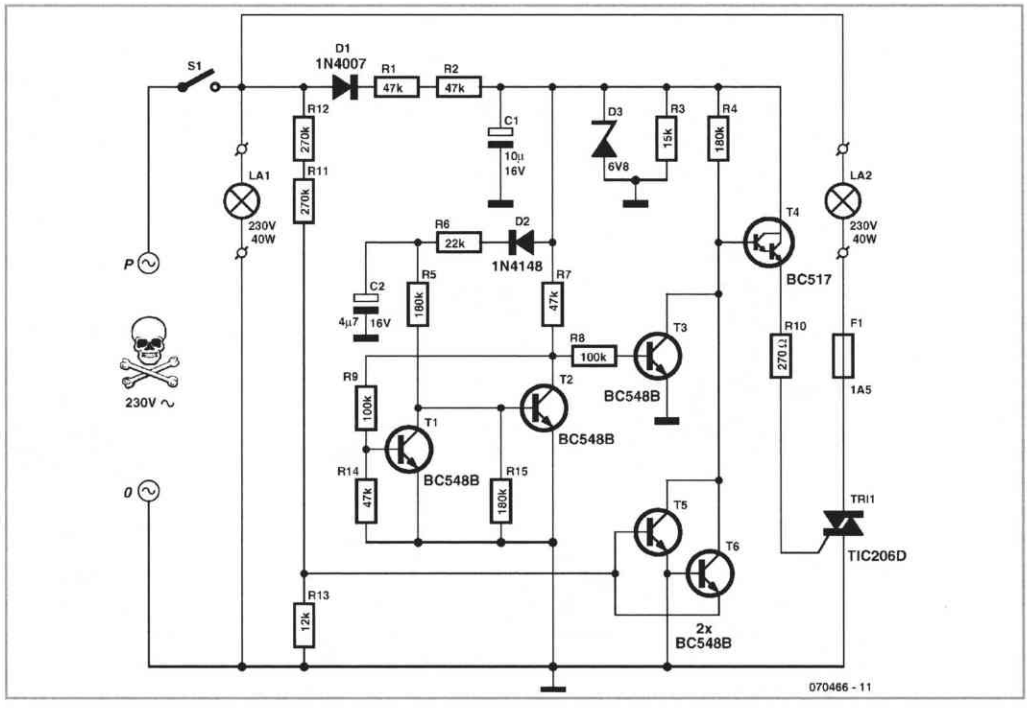

but when T1 turns on it diverts the base current away from T2, which therefore remains turned off. This situation is stable: the base of T3 is not pulled down and so this transistor conducts.

To turn the second lamp on, switch S1 is opened and then, within a second or so, closed again. The effect of this action on the flip-flop is as follows.

When the switch is opened the voltage across C1 falls more rapidly than the voltage across C2. The main reason for this is resistor R3, which is directly responsible for the discharge of C1; C2 can only discharge through the relatively high resistance of R5, since the other path is blocked by diode D2. This means that T2 is driven via R5 for one or two seconds longer than T1 is driven via R7 and R9. If during this time the supply voltage reappears, it can no longer drive the base of T1 via R7 as T2 is conducting all the current to ground. This situation is also stable, as C2 is recharged via D2 and R6.

When T2 conducts it pulls the base of T3 to ground, so that this latter transistor turns off. Darlington transistor T4 now conducts as its base is pulled high via R4. T4 now provides the trigger current for the triac via current limiting resistor R10, and the second lamp lights.

T5 and T6 together form a zero-crossing detector. It ensures that the triac is never triggered at a moment when the AC mains supply is at a high voltage point in its cycle. This avoids a rapid inrush current into La2, which would give rise to considerable radio interference. Also, trigger current is only required for the triac for a small fraction of the period of one cycle of the mains supply. If this current were drawn continuously from the low voltage supply, C1 would rapidly discharge; R1 and R2 would have to be considerably reduced in resistance, which would increase the heat dissipation of the module, perhaps making it infeasible to build the circuit into a plastic ceiling rose.

Using the component values shown the triac is only driven when the instantaneous mains voltage is less than about 15 V in magnitude.

The voltage divider formed by R11, R12 and R13 switches on the transistors T5 and T6 when the voltage is greater than +15V or less than –15 V respectively. The collectors of these transistors, which are connected together, pull the base of T4 down to ground or to a slightly negative voltage when the mains cycle is outside the desired phase window. Any resistors across which mains voltages will be dropped are formed from two individual resistors wired in series to ensure that the maximum voltage specifications of ordinary 0.25 W components are not exceeded. This applies to R1 and R2, as well as R11 and R12.

The whole circuit is at mains potentials and great care must be taken to observe all relevant safety precautions in construction and installation.

(070466-I)

207 Tiny Simon

HOBBY AND MODELLING

Clive Graham

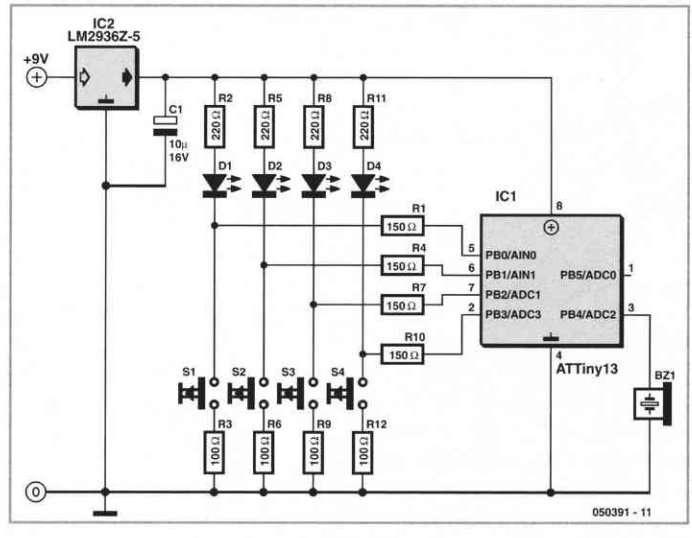

The 'Tiny Simon' game is based upon the 'Simon says...' sequence following game which has proved popular over the years. Although not particularly original in concept, this implementation of the game, put together for use by playschool children, has a number of noteworthy features. The game uses sound (via a piezo-sounder) and light (via four LEDs) to display an extending sequence to the player, who has to follow and repeat back the sequence via a set of four press-switches. If the sequence is remembered correctly, a celebratory tune is played (with light show) and the sequence extended by a further element. If not, the player is shown the correct sequence and, after a short 'jingle', is invited to play again.

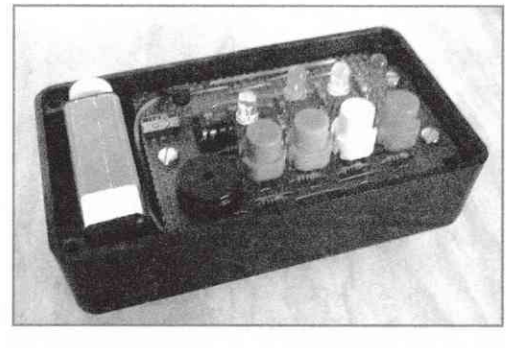

The circuit is built around an ATtiny13 microcontroller running software written for the project. As you can see from the circuit diagram, the ATtiny13 chip in its 8-pin case does not require much in the way of external components to make an attractive little game that hopefully will keep children busy for a while.

The software was coded in AVR assembler using the freeware Atmel AVR Studio4. It is available free of charge from the Publishers' website as file number 050391-11.zip. Careful use of modular programming allows for easy changing of music generated during the game (stored in EEPROM) and other features. An 8-stage maximal length pseudo-random number generator (in software) is used to produce a varied and easily checked light sequence.
Feedback taps can be altered in software to produce a different sequence. Each starting point for a sequence is saved in EEPROM, so if power is lost, a new starting point is automatically selected upon power-up. Dynamic I/O switching is used to reduce pin-count – the LEDs and pushbuttons are conected to the same pins on the ATTiny13!

The game runs from a 9-volt PP3 type battery The low quiescent current of less than 8 μA is due to the use of a micropower regulator type LM2936Z-5 and extensive power saving features on the ATtiny13 (the micro draws less than 1 μA!).

Construction is very simple and the parts are inexpensive and easily obtained. The component count is so small that construction of the circuit on a piece of Veroboard is a perfectly acceptable option.

The photograph shows an experimental construction of the game is an ABS box. The small, hand-held construction allows easy operation for those with small fingers!

(050391-1)

208 Mains Indicator

HOME AND GARDEN

Karel Walraven

It is not always immediately obvious whether a power-consuming appliance is switched on or not.
Examples are the lamp in the attic or the shed, or electric heating in an awkward place.

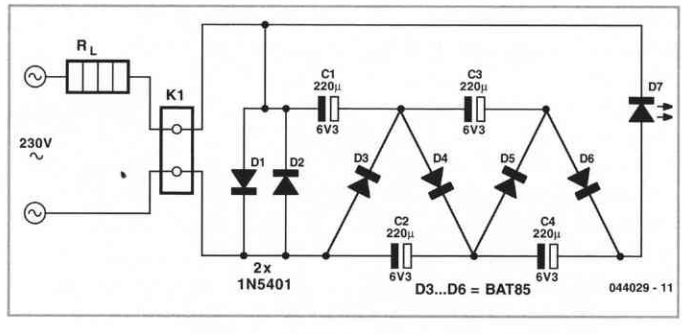

A nice solution would be to connect an LED directly in series with the appliance, unfortunately you'd better duck for cover if you tried...

The obvious solution would be to place a (power-) resistor in series with the load and connect an LED with series resistor across it. However, this solution has significant disadvantages, for instance, the power loss is relatively large (easily a few watts). In addition, the value of the resistor should be adjusted depending on the magnitude of the current.

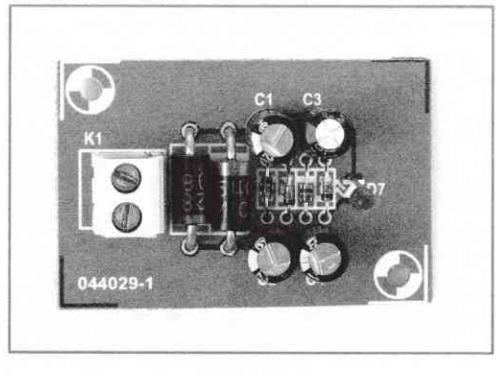

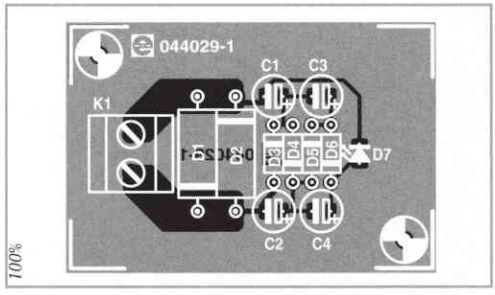

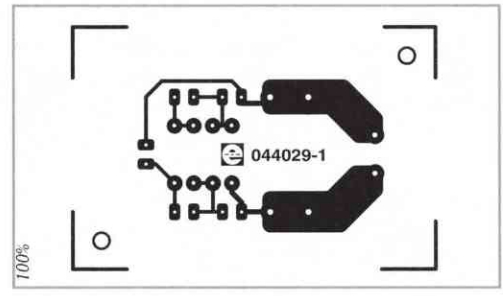

COMPONENTS LIST

Capacitors:
C1-C4 = 220 μF 6.3V

Semiconductors:
D1, D2 = 1N5401
D3-D6 = BAT85
(or any other Schottky diode)
D7 = LED, low current

Miscellaneous:
K1 = 2-way PCB terminal block, lead pitch 5mm
PCB, order code 044029 from The PCBShop

It would be better to insert two anti-parallel diodes in the power lead. Unfortunately, the voltage drop is too low to power an LED. It does work with 6 diodes, for that matter, but the power loss is then also 3 times greater.

We therefore chose a solution with two diodes, followed by a 4 times voltage multiplier in the form of a cascade rectifier. That is an energy friendly solution. The current through the LED is automatically limited by the internal impedance of the cascade rectifier. The impedance isn't that small, despite the large electrolytic capacitors. Use a low-current LED, otherwise the LED will probably not be bright enough. The 1N5404 used here can handle up to 3 A (3 A × 230 V = 690 W).

If the power is less than 200 W, you could use two 1N4004s instead. The voltage across the diodes is a square wave with an amplitude of about 1.3 Vpp. The voltage multipliers are used to turn this into the LED voltage.

This will only work if the voltage drop across the diodes in the multipliers isn't too large. That is why these diodes are Schottky diodes. These only have about a 0.35 V voltage drop. Exactly which type of Schottky diode that you use is not too important.

You are free to experiment with the value of the electrolytic capacitors. The larger their value, the greater is the amount of current that can be delivered.

Keep in mind that working with mains voltage can be fatal. Build the circuit in such away that there is no risk that live parts can be touched and maintain isolation distances of 6 mm (also in air).
For the same reason, use a 5 mm LED (not a 3 mm one!) and fit it as far into the enclosure as possible. Mount the PCB in the enclosure with nylon bolts.

(044029-1)

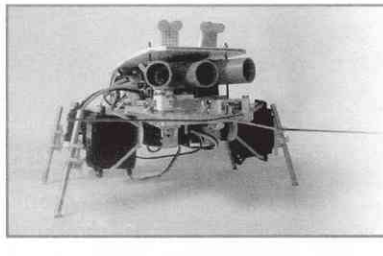

Machine-power starting on page 340!
91 robot-circuits, -ideas, -tips and more...

209 LED Thermometer

TEST AND MEASUREMENT

Uwe Reiser

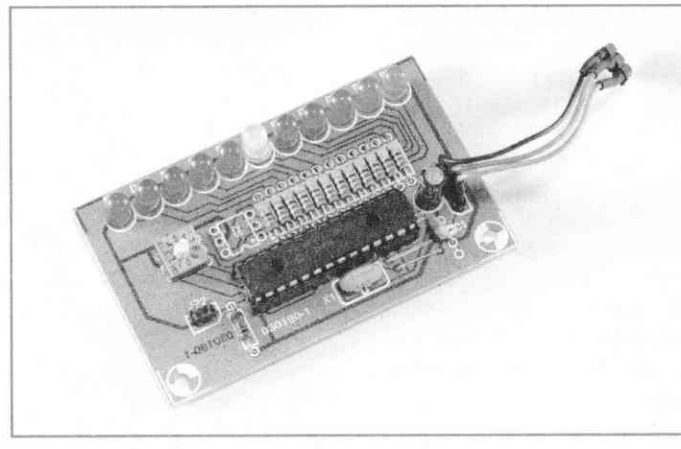

The circuit described here is the digital and display section of a thermometer; the analogue circuitry and signal conditioning required to use an LM35 temperature sensor are described om page 311 ('LM35 to ADC').
The analogue-to-digital converter used here is hidden inside a PIC16F873 microcontroller behind the RA5 port pin. It has a resolution of 10 bits (1024 steps), allowing a temperature range of 128 °C to be divided into steps of exactly 128 °C / 1024 = 0.125 °C. Displaying a range of 1024 steps of one eighth of a degree, or even just 128 steps of one degree, on a row of LEDs is hardly practical. A better plan is to specify a desired temperature value and allow the microcontroller to indicate deviations from that temperature over a small range; effectively moving a magnifying glass over the temperature scale.

1

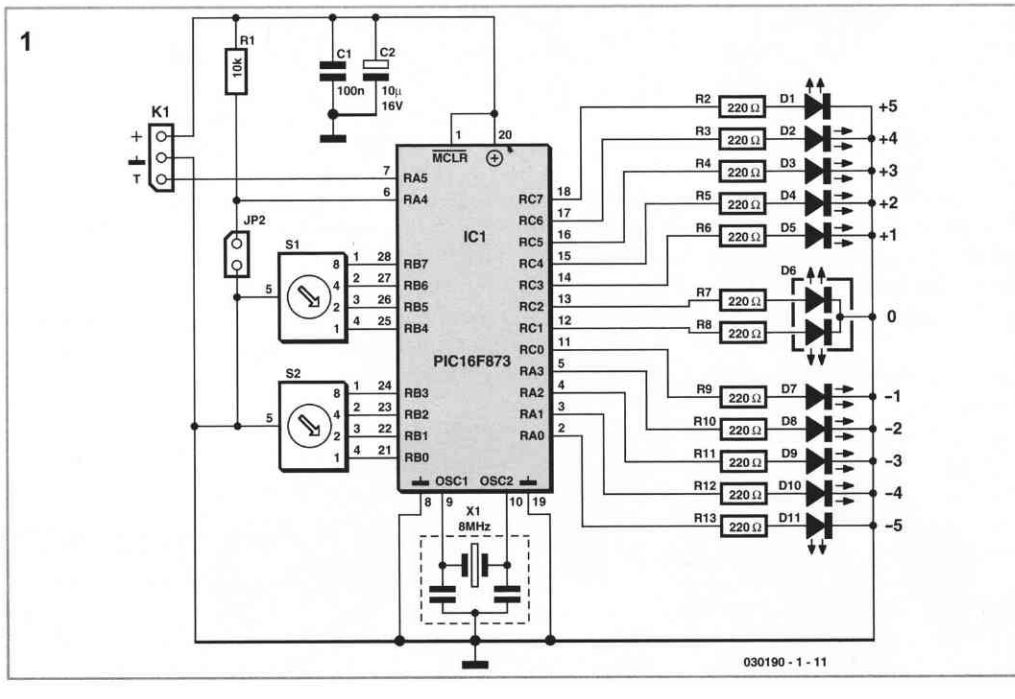

The BCD-encoded switches are used to set the desired centre temperature. When the measured temperature is equal to this value the centre two-colour LED D6 will light green. If the temperature deviates from this value, the LED will light yellow. LEDs D1 to D5 indicate positive deviations and LEDs D7 to D11 indicate negative deviations in steps of one degree.

If the overall measurement range is from –24 °C to +84 °C we can therefore set the centre point between –19 °C and +79 °C.
Half-degree steps are indicated by two neighbouring LEDs lighting simultaneously. For example, between 19.75 °C and 20.25 °C just one LED will light; between 20.25 °C and 20.75 °C the next LED will also light; and between 20.75 °C and 21.25 °C just the second LED will light. If just the top or bottom LED is lit, it means that the temperature is outside the displayable range.

The BCD-encoded switches (S1 for the tens digit and S2 for the units) used to set the centre value have the advantage that there is no need for mental acrobatics converting between decimal and hexadecimal when setting or checking the value. Since negative numbers cannot be set using the switches, the value is expressed as the offset from the bottom of the temperature range.

The software updates the displayed value every second if JP2 is fitted; if, however, port RA4 is high (jumper not fitted) a 900 ms delay loop in the software is bypassed and the display is updated at full speed.

A printed circuit board layout is available for the digital section of the thermometer (see **Figure 2**). The two BCD switches are in 6-pin DIL packages and can easily be fitted in sockets so that they can protrude through the

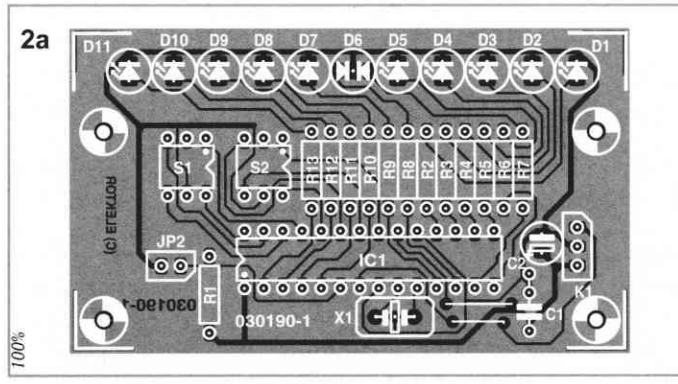

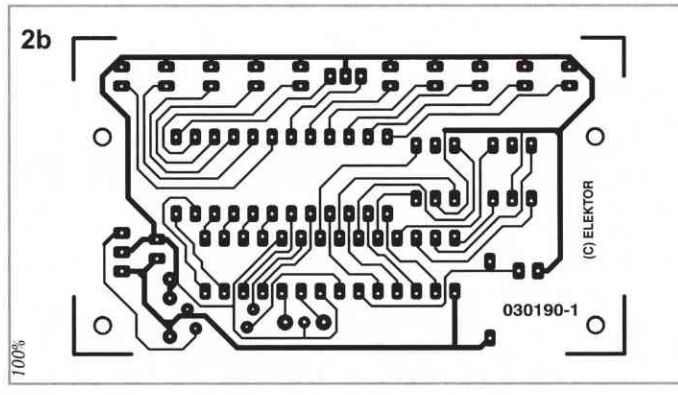

COMPONENTS LIST

Resistors
R1 = 10 k
R2-R13 = 220 Ω

Capacitors
C1 = 100 nF
C2 = 10 µF 16V radial

Semiconductors
D1-D5, D7-D11 = LED, 5mm
D6 = TwinLED (DuoLED) green/yellow
IC1 = PIC16F873-20/SP, programmed, order code 030190-41

Miscellaneous
X1 = 8 MHz ceramic resonator (3 pins)
S1,S2 = BCD complement switch (APEM PT65-702)

lid of an enclosure. If the microcontroller is also be fitted in a socket it may become necessary to stack two or more sockets for the switches. The LEDs are situated at the edge of the board so that their leads can be bent through 90 ° if desired. When the board is populated (not forgetting the wire links near the resonator!) and the soldering has been checked on both boards, JP2 can be fitted and the circuit can be tested.

During initialisation the microcontroller will run a power-on self test: the row of LEDs is lit in sequence from bottom to top. Each of the 23 possible display patters is shown for 100 ms. Finally the two-colour LED flashes yellow twice, and the unit starts to display the temperature.

Now switch off the power supply, remove JP1 on the digital board and set the BCD switches to the zero position. On the analogue board connect the LM35's ground to the amplifier input (JP1 in position 0). Apply power and adjust P1 until LED D11 lights; this corresponds to the lower limit of the temperature measurement range.

(030190-I)

210 Attitude Sensor

MISCELLANEOUS ELECTRONICS AND DESIGN IDEAS

Bernd Oehlerking

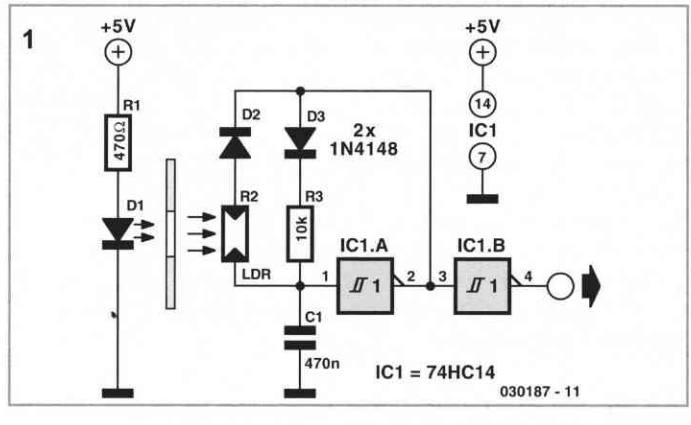

The circuit presented here (in two versions) uses a light barrier as a position sensor. In the first version (**Figure 1**), the light barrier consists of an LED (D1) for the light source and an LDR (R2) for the receiver. The LDR is part of a CMOS oscillator that generates a digital signal (pulse waveform) whose high/low ratio (duty cycle) and frequency depend on the intensity of the impinging light. With the arrangement shown in the photo, the sensor is used together with a positioner. The light-dependent resistor is more or less obscured by a pendulum, so the duty cycle and frequency of the output signal depend on the position of the actuator. If the LED and pendulum are omitted, the light falling on the light-dependent resistor can also be used to directly determine the frequency and duty cycle.

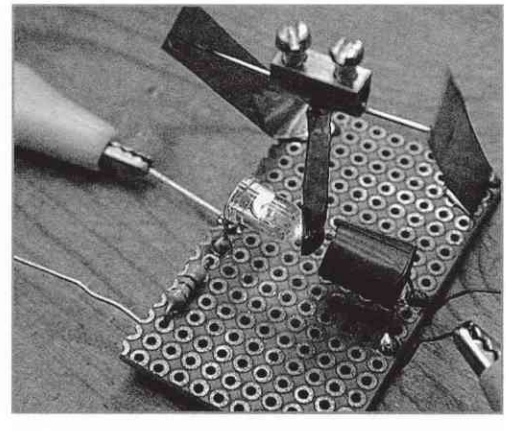

The second version (**Figure 2**) represents a refinement of the positioning mechanism. As can be seen in the photo, it differs from the

first version by using a slotted light barrier. The pendulum that swings in the slot of the light barrier is formed by two simple strips of tinplate (which can be cut from a tin), which are bound together using a clothcovered elastic band. A bit of solder applied to the end of the strips provides the pendulum weight.

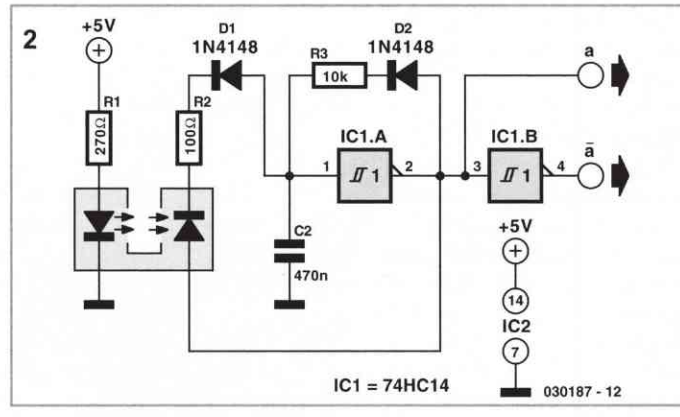

As in the first version, the light receiver (photodiode) of the slotted light barrier is more or less obscured depending on t he position of the positioner. The photodiode in turn drives a pulse generator made from two CMOS Schmitt-trigger inverters, whose duty cycle and frequency are highly variable. A dc voltage that directly indicates the position of the pendulum can be generated from the pulse waveform using a low-pass RC network connected to the output of the generator.

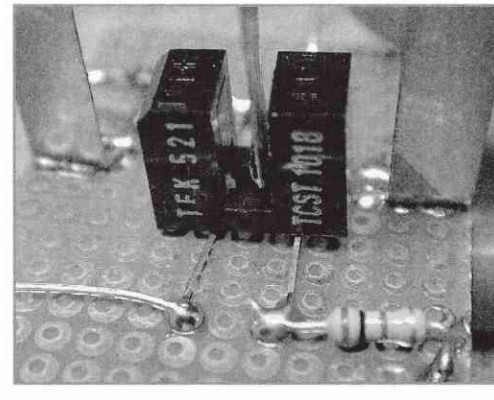

Suitable types of slotted light barriers are for example the TCST 1018 and TCST 2000 (Conrad).
The idea for this positioner came from working with a multi-rotor helicopter whose motor speeds had to be adjusted if the helicopter threatened to tip over. There are certainly other possible applications (such as a tremor sensor) for this sensor, which is easy to build and adjust and which responds to only a few degrees of tilt with a large change in duty cycle.

(030187-1)

211 Direction-sensitive Light Barrier

HOBBY AND MODELLING

Robert Edlinger

Model railway hobbyists who want to trigger train-controlled switching operations depending on the direction of travel often have things easy with systems such as Märklin HO or Miniclub Z gauge, since the corresponding switching track sections can be actuated individually in both directions. Things are different with other systems, such as the Märklin Maxi/1 gauge. Here it's necessary to use selective switching hardware for this purpose.

A popular approach is to use reed switches together with permanent magnets fitted to the bases of the vehicles. Unipolar and bipolar Hall switches can also achieve the same objective. However, a permanent magnet

must always be present on the train to act as a trigger element.

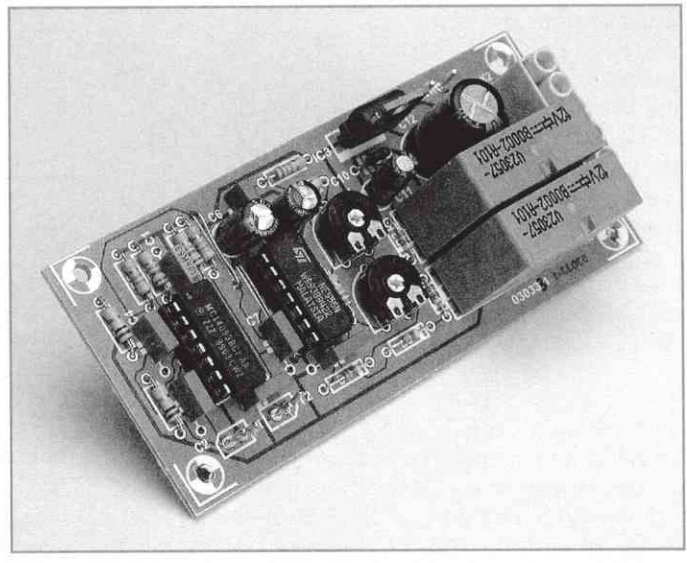

Although normal light barriers cannot be used for direction-dependent control, with a bit of additional effort and expense they can be built such that trains selectively trigger switching operations in the desired direction. To prevent the gaps between carriages or wagons from generating undesired pulses, an adjustable dead time is added after the sensor.

The light barrier is based on a flip-flop made from the four NAND gates of a 4093 IC, each of which has two Schmitt-trigger inputs. Two of the inputs (pins 6 and 8) are connected to identical phototransistors (T1 and T2) and collector resistors, and in the quiescent state when the phototransistors are illuminated and thus conducting, they remain Low. Both gate outputs (pins 4 and 10) are then High. If a vehicle now blocks one of the phototransistors (for example T1, although the circuit naturally works the other way around as well), the signals on the input and output of gate IC1d change levels. The output of gate IC1c is not affected by this, even though its 'internal' input (pin 9) goes low. If the vehicle also blocks T2 as well, nothing changes until it has trav-

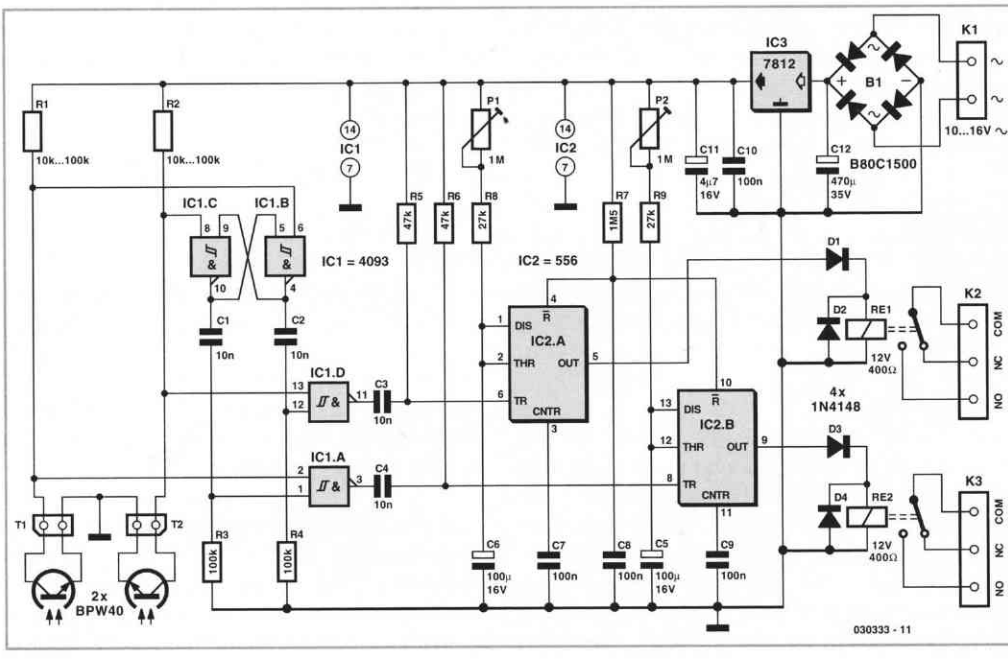

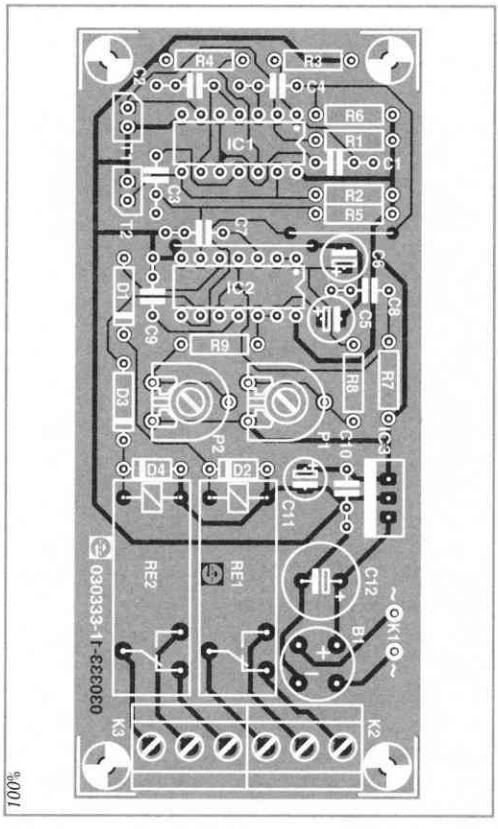

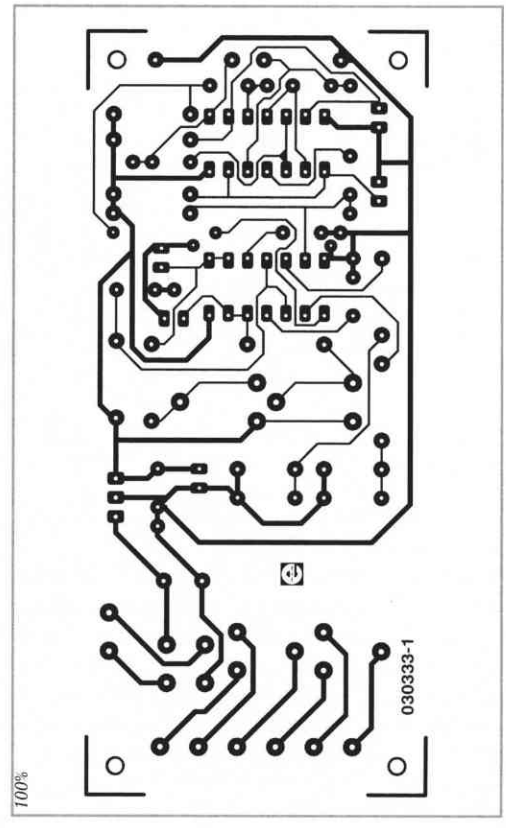

elled past T1. When that happens, the pin 4 output goes High again, but the pin 10 output toggles Low. When the vehicle has finally passed both phototransistors, pin 10 also goes back to the High level. The flip-flop is then restored to its original state.

For this behaviour to take occur, phototransistors T1 and T2 must be arranged such that when a vehicle passes by, at first only one of them is blocked, them both, and finally only the other one. This means that the distance between the phototransistors must always be less than the length of the vehicle.

When an output level changes, a pulse with a duration of around 10 ms appears at the input of gate IC1b (pin 12) or IC1a (pin 1). The time constants are determined by the timing networks (R3/C1 and R4/C2). As a High level (generated by the obscured phototransistor) is required on the other gate input (pin 13 or 2) to allow the pulse to pass through the gate, only one of these two pulses can proceed further to act as a trigger signal for the subsequent timer stage.

The two identically configured timers of the 556 dual timer IC function as monostable multivibrators, and thus act as pulse stretchers. Each of them drives an output relay with switchover contacts. The time constants of the monostables can be varied over the range of 3–170 s using the adjustment networks P1/R8/C6 and P2/R9/C5, independent of the supply voltage. RC network R7/C8 ensures that the two timers are in the quiescent state (outputs Low) after power is switched on.

Freewheeling diodes D2 and D4 are essential with inductive loads; they bypass the counter-EMFs generated by the relay coils. D1 and D3 keep the voltage across the freewheeling diodes away from the timer outputs. If you want to have a visual operation indicator, D1 and

COMPONENTS LIST

Resistors:
R1, R2 = 10–100 kΩ (see text)
R3, R4 = 100 kΩ
R5, R6 = 47 kΩ
R7 = 1MΩ5
R8, R9 = 27kΩ
P1, P2 = 1 MΩ preset

Capacitors:
C1–C4 = 10 nF
C5, C6 = 100 µF 16V radial
C7–C10 = 100 nF
C11 = 4F7 16V
C12 = 470 µF 35V

Semiconductors:
B1 = B80C1500 (80V piv, 1.5A)
D1–D4 = 1N4148
IC1 = 4093
IC2 = 556
IC3 = 7812
T1, T2 = BPW40

Miscellaneous:
RE1, RE2 = 12V relay (400 Ω) 1·changeover contact
K1 = 2 solder pins
K2, K3 = 3-way PCB terminal block, lead pitch 5mm
PCB, order code 030333-1 from The PCBShop

D3 can be replaced by red LEDs with a voltage drop of 1.6–2.0 V. As the circuit dissipates a fair amount of power, a small heat sink is recommended for the fixed voltage regulator (IC3), to keep it from overheating.
We have designed a circuit board layout for this circuit, which can be fitted with components fairly quickly. Don't overlook the (single) wire bridge between C6 and R5, and ensure that the electrolytic capacitors, diodes, transistors and ICs are fitted the right way around. The ICs can be fitted in sockets if you wish.

As the circuit board is relatively large, it probably should be mounted 'under the floor'. In that case, the phototransistors will have to be fitted off the board. The leads from the phototransistors to the circuit board should be screened and certainly not be longer than around 10 cm.
The values of the two collector resistors (R1 and R2) for phototransistors T1 and T2 can be varied over a wide range (10 kΩ to 100 kΩ) in order to match the sensitivity to specific conditions. However, increasing the resistance not only increases the response sensitivity and thus the range, it also increases the susceptibility to interference from stray light (which is any how rather high). If you have to deal with bright stray light (direct sunlight or fluorescent lamps in the immediate vicinity), you should fit the transistors with lengths of small-diameter plastic tubing blackened on the inside and/or IR filters with maximum sensitivity in the invisible spectral range of 800–900 mm.

Small incandescent lamps (16 V, 1 W), which naturally also emit IR light, are suitable as light sources. If a visible light source is undesirable, the lamps can be almost completely 'camouflaged' using infrared filters. The other option is to invest in IR diodes: high-power types such as the SFH485 (100 mA max, 950 nm) allow barrier widths of more than 10 cm without any lenses. With suitable reflectors (with or without lenses), the range can be significantly increased. A value of 180 Ω / 1 W is recommend for the series resistor.

This bidirectional light barrier is suitable for a variety of tasks. For instance, one relay output can serve as a layover switch in one direction, while a train travelling in the other direction can cause a turnout or points to be actuated. A voice recorder prepared with whistle or bell signals can also be triggered by one of the relays. Flashing warning lights can also be driven, or the relays can act as an automated 'signalman' for barrier gates.
Naturally, this light barrier circuit can also be used for all sorts of counting tasks or as an alarm generator in domestic situations, if the nature of the object to be detected makes this possible. If only relatively short pulses (on the order of a tenth of a second) are needed, for instance to drive a counter, the RC networks that determine the timer values must be correspondingly modified. Photoresistors in miniature packages can be placed so close together that entomologists could even use the circuit to count exactly how many bees or bumblebees fly in or out.

(030333-1)

212 Discrete Robot

Gerhard Nöcker

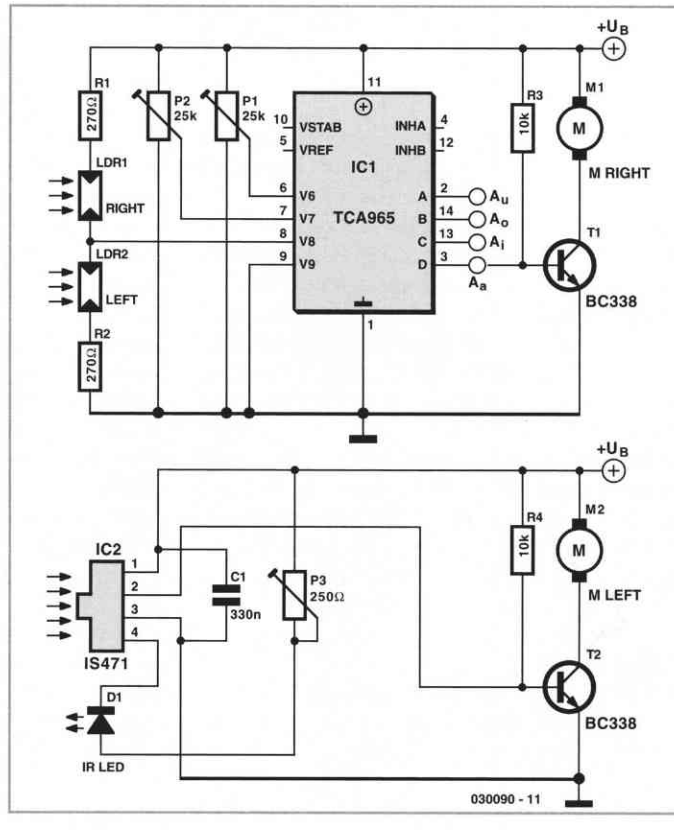

This simple robot, which responds to light and avoids obstacles, can be built without using a microcontroller, programmer or PC. The only 'special' component in the circuit is a window discriminator (a fancy version of a window comparator).

Resistors R1 and R2 in combination with light-dependent resistors LDR1 and LDR2 form a voltage divider (with the current being limited by R1 and R2 for bright light). Window discriminator TCA965 compares the mid-point voltage with an upper threshold value (adjustable using P1) and a lower threshold value (adjustable using P2).

Outputs A_U, A_I, A_O, and A_A go High if the voltage lies below, inside, above or outside this window, respectively; otherwise they remain Low. Output A_A switches transistor T1, which drives the right-hand motor. The light-dependent resistors can be attached on the left and right sides of the vehicle, or at the front and rear. This causes the robot to turn to the right, due to the motor on one side being stopped, until the desired lighting relationship is restored. The vehicle will then continue to travel in a straight line until the lighting relationship again changes, at which point it will again turn, and so on.
You can experiment with various behaviour patterns by using the other outputs of the window discriminator. If a transistor is provided for each of the A_U and A_O outputs of the TCA965, the robot can be made to travel toward or away from a light source, depending on the connections. Using the window discriminator, the robot will operate under the rules of a three-point controller (left, straight ahead, or right). If you fit the light-dependent resistors in a box under the vehicle together with a light source, you can try to have the robot follow a black line on a white background.

A reflective IR sensor enables the robot to respond to obstacles. This not as simple as it might seem, since the Sharp IS471 operates the IR LED with pulsed light and uses sophisticated detection processing. When an ob-

stacle is detected, the output (pin 2) goes Low and blocks transistor T2. This causes the motor to stop, and the vehicle will rotate about the stationary wheel until the obstacle is no longer in its path. The sensitivity of the IS471 can be set using P3. As its range is only around 10–15 cm, the vehicle must not travel too quickly, since otherwise it will not be able to avoid obstacles in time.

This part of the circuit is also open for experimentation. If a relatively large and fast robot requires an obstacle detector (or isn't fitted with the IS471), an ultrasonic detector can also be used. Suitable complete construction kits are available from Conrad, for example. You can also fit a suitable mechanical push-button switch mounted on a flexible rod. The obstacle detector can also drive a warning buzzer or a lamp; the circuit leaves lots of room for your own ideas.
The circuit works over a wide range of supply voltages from 4.5 to 16 V. If larger motors are used, transistors with increased power-handling capacity and heavier batteries are necessary. The author connected two 4.8-V rechargeable batteries in series and used BC388 transistors as drivers for Lego micro-motors. You can build the robot entirely according to what you have in your parts box. The mechanical elements can also be freely selected, but they partially determine the behaviour and operation of the robot. The author's robot is made from a Lego chassis with a prototyping board holding the circuitry attached using elastic bands. The motors are fitted on the left-hand and right-hand sides. The third wheel at the front can turn freely.

One problem must be mentioned: if an obstacle is detected while an incorrect lighting relationship is present, the vehicle remains standing. In this case, a bit of logic could be added to cause both motors to rotate in reverse. However, that would require directional switches for the motors or motor driver ICs (L293D). The simple circuit would become more complicated and larger, and at some point you would end up using a microcontroller after all – but that's just the point of the story.

(030090-1)

213 Thrifty 2-Hz Clock

MISCELLANEOUS ELECTRONICS AND DESIGN IDEAS

P.C. Hogenkamp

CMOS circuits are known for their low current consumption. This is particularly important for battery-powered circuits. Unfortunately, oscillators often require quite a bit of current. We therefore propose this oscillator circuit that has a very low current consumption (about 3 μA).

The circuit is powered from a type LM334Z current source. The current has

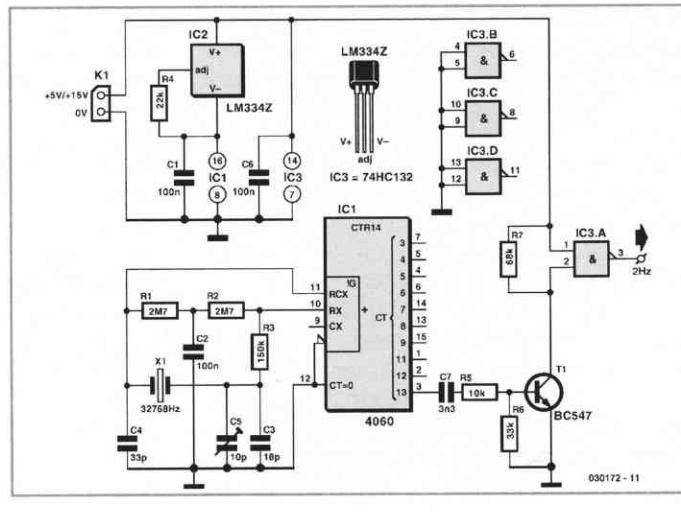

been set with R4 to about 3 μA. This is sufficient to power IC1 and the oscillator circuit around X1. The oscillator generates, with the aid of a cheap watch crystal and a few surrounding parts, a signal that is subsequently applied to the divider in the 4060 and results in a frequency of 2 Hz at pin 3 (output Q13). The level of the output pulses is a lot lower than the nominal 5-V power supply voltage (IC1 is after all powered from a current source with very low current). That is why the signal on pin 3 of IC1 is amplified and inverted by T1.

IC3a finally turns it into a proper square wave with acceptably steep edges.

(030172-1)

214 Voltage Regulator Calculation

POWER SUPPLIES, BATTERIES AND CHARGERS

Victor Himpe

Before you can design an adjustable voltage regulator into your circuit, or do a redesign, you need to calculate the values for two resistors.

This is not difficult in itself, but actually finding the right resistors may pose problems. Fortunately a trick is available to make it all much easier.

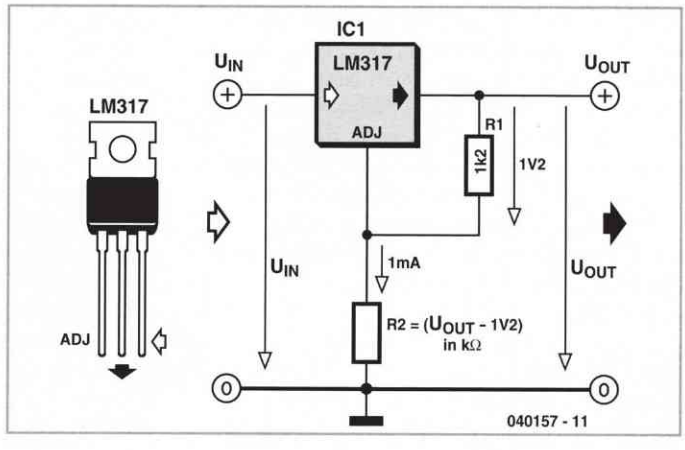

With most adjustable voltage regulators like the LM317 and LM337, the input voltage has to be 1.2 to 1.25 volts above the desired output voltage. This is because the voltage at the ADJ (adjust) input is internally compared to a reference voltage with that value.

The reference voltage always exists across R1. Together with preset R2 it determines the current flowing through the ADJ pin, as follows:

$$V_{out} = V_{ref} \cdot \left[1 + \frac{R2}{R1}\right] + I_{ADJ} \cdot R2$$

If for the sake of convenience we ignore I_{ADJ}, enter the reference voltage (1.2 V) and for R1 select a value of one thousand times that voltage (i.e., 1.2 kΩ) then the equation is simplified to:

$$R2 = 1000 \cdot (V_{out} - 1.2)$$

In practice, simply determine the voltage drop across R2 (output voltage minus reference voltage) and you get your resistance value directly in kilo-ohms. For example, for 5 V R2 becomes 5 – 1.2 = 3.8 kΩ which is easiest made by connecting 3.3 kΩ and 470 Ω resistors in series.

In the case of relatively low voltages, smaller resistor values are recommended. This is because sufficient current needs to flow to enable the voltage regulator to do its job. A simple solution is to choose, say, 120 Ω for R1. R2 then becomes:

$$R2 = 100 \cdot (V_{out} - 1.2)$$

(040157-1

215 Power Supply for USB Devices

POWER SUPPLIES, BATTERIES AND CHARGERS

Roman Mittermayr

More and more equipment is sold that runs off internal rechargeable batteries. Although a matching charger is usually supplied in the package, there are also devices that can only be charged via a USB port. That is not surprising in the case of USB MP3 players, which have to 'dock' in the PC anyway for some time for the purpose of file transferring. Still, the same 'feature' can be a serious disadvantage, for example, on 'computer-free' holidays.
Sometimes it makes you wonder how simple the solutions to such problems actually turn out to be. After all, if it's just a supply voltage we're after, then a USB port is easily imitated.
The circuit shown here is nothing but a 7805 in a dead standard configuration. The innovation, if any, might be USB connector to which the MP3 player can be connected.
The 7805 comes in different flavours — most devices can supply 1 A, but there are also more advanced variants that achieve up to 1.5 A. Because a USB device is never allowed to draw more than 500 mA from the port it is plugged into, the circuit shown here should be able to supply charging and/or operating current to up to two (or three) USB devices at the same time.
The input voltage may be a direct voltage of anything between 7 and 24 volts, so for use at

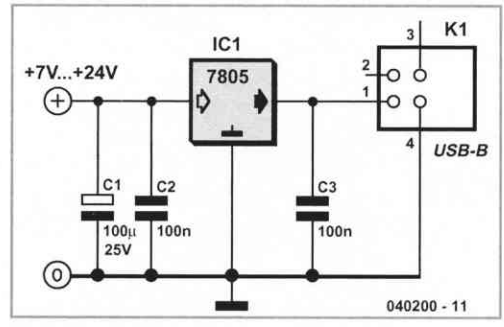

home or abroad a simple wall cube with DC output is sufficient. Another useful bit to make yourself might be a cable with an inline fuse and a cigarette lighter plug so you can tap into a vehicle supply (note that this may be up to 14.4 V with a running engine).
At an output current of 1 A and an input voltage of just 7 V, the 7805 already dissipates 2 watts. Assuming you're using the most commonly seen version of the 7805, the TO-220 case with its metal tab will have a thermal resistance of about 50 °C/W. Also assuming that the ambient temperature is 20 °C, the 7805's internal (chip) temperature will be around 120 °C. In most cases, 150 °C is the specified maximum, so ample cooling must be provided especially in a car and with relatively high input voltages.

(040200-1)

216 Simple Li-Ion Battery Charger

POWER SUPPLIES, BATTERIES AND CHARGERS

Elbert Jan van Veldhuizen

After two to three years of active use most mobile phone batteries will have lost a lot of their original capacity, and are best replaced. However, such a discarded battery may have enough capacity left to power, for example, a real-time clock (RTC) for many months in the event of a power outage. What's more, the battery is 'surplus to requirements' and therefore free. Normally, a good amount of electronics is needed to charge Li-Ion batteries in a

couple of hours. However, the most important aspect to keep in mind during the charging process is the danger of overcharging, as that may lead to explosion. The figure shows a simple circuit for slow charging while preventing any risk of overloading the battery. The circuit consists of just four components. The battery is charged to about a quarter of its capacity in one day, to 50% in one week and 80% in one month – sufficient we reckon for equipment that's on all the time.

Depending on the exact type, a fully charged Li-Ion battery supplies between 4.1 V and 4.2 V, or 3.6 V when empty. When charging, the circuit employs the non-linear characteristic of a diode. With a flat battery, the charge current flows through diodes D1 and D2, causing a voltage drop of 0.7 V across each diode. A current of 5 mA then flows through the diodes and the battery. At a battery voltage of 4.2 volts, the drop across the diodes is down to 0.4 V, causing a current of 15 μA through the battery. With R1 at 270 kΩ the charge voltage cannot exceed 4.2 V because the diode current then balances the current through R1. For 4.1 V Li-Ion batteries, R1 needs to be changed into 100 kΩ. The amount of self-discharging of the author's battery was found to represent an internal parallel resistance of 50 kΩ, making R1 superfluous and limiting the charge voltage to about 4.0 V. The exact

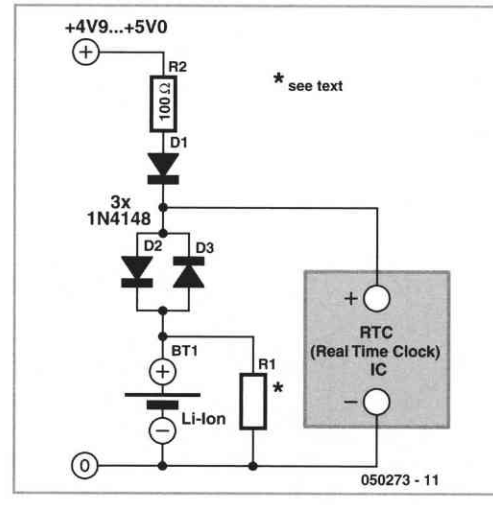

value has to be determined for each individual battery.
The rest of the circuit speaks for itself. Once the 5-V supply voltage is present, the current flows to the RTC via diode D1. When the voltage is interrupted, the IC is powered from the battery via diode D3. R2, finally, affords short-circuit protection.

Caution! The circuit must be powered by a regulated supply voltage not exceeding 5 volts. Higher voltages present a risk of battery explosion and must be avoided.

(050273-1)

217 SMD Soldering Aid

MISCELLANEOUS ELECTRONICS AND DESIGN IDEAS

Gert Baars

When soldering SMDs (surface mount devices) onto a circuit board, it is often difficult to keep the tiny component correctly positioned. With two hands in use, one holding the soldering iron and the other, the solder tin, you really need a third hand to keep the SMD in place. Fair enough, SMDs with a lead pitch of 0.05 inch stand a good chance of success if you melt-and-move a little to first secure the two corner pins of the IC to make sure it's properly aligned on the solder pads. Smaller ICs with a lead pitch of just 0.65 mm or even 0.5 mm are far more difficult to handle and really suitable for machine mounting only.

A possible solution to the problem is to secure the IC to the board with a drop of hobby glue. Next, you align the IC using a magnifying glass and allow the glue to set. This may last up to a couple of hours.

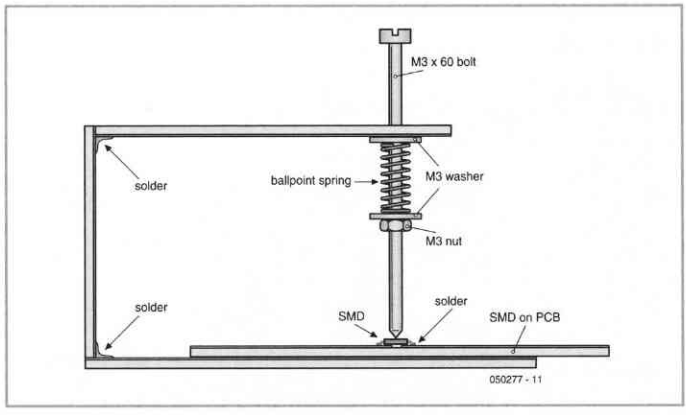

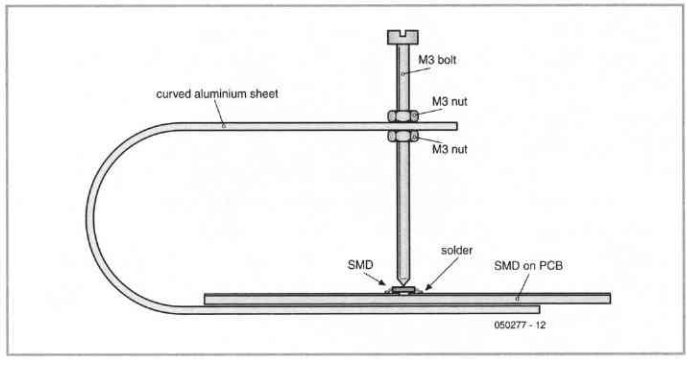

The author having run into this problem often enough, an idea came to mind to make a simple but effective little tool that's easy to produce at home.

We're looking at a kind of miniature clamping device capable of holding an SMD in place with sufficient force to allow it to be soldered, but less pressure than to crush the device!
The first version consists of three strips of PCB material, an M3 nut, a pressure spring and some washers and nuts. The drawing shows that A, B and C are pieces of unetched board material secured to form a U-shape. At point 'A', a 3-mm hole is drilled at the end. A 60- mm long M3 bolt with one end filed into a tip is inserted into this hole. The bolt end protruding from the upper board strip (A) takes an M3 washer and a spring. The spring is conveniently salvaged from a ballpoint pen and should have relatively low pressure tension. Next, the long M3 bolt takes a washer and a nut, causing the spring to push the screw downwards. With a little adjustment of the nut, a setting can be found at which the screw exerts a little pressure on the IC on the board underneath it – just enough for our purpose. The drawing really speaks for itself.

The tool is simple to use – first, put the SMD roughly in position on the board and lift the bolt a little. This is easiest done by pushing up the tip side. Slide the board under the bolt, aligning the IC under the tip. Because the bolt will have some play, the IC can be moved exactly onto its footprint using the tweezers, a matchstick or a small screwdriver. All the while, the bolt will exert enough pressure on the IC to enable you to solder the corner pins without shifting the SMD, but also allowing enough play to move the IC about a little while aligning.

Should the IC start to slide off in the wrong direction, the spring pressure has to be increased a little by turning the nut up a little. The sizes of the materials used may be selected to personal requirements. The author's first version of the tool is intended for smaller PCBs and has the following dimensions:

A = 15×60×2 mm;
B = 15×45×2 mm and
C = 15×75×2 mm.

In principle, it is also possible to machine the U piece from a single piece of metal sheet by bending two right angles and a curvature. If the material used is neither too thick or too short, it will exhibit enough tension of its own so a spring will not be required.

(050277-1)

218 Delphi Floating Strings

COMPUTERS AND INTERNET

P. Goossens

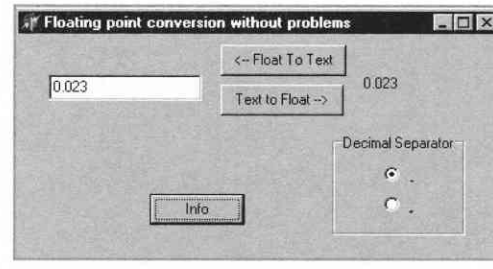

While writing a program in Delphi, we encountered a problem in converting a floating-point variable to a string and back to a variable. The strange thing about this problem was that it only occurred on a particular PC. Further investigation was necessary to determine why this problem only occurred on this one PC, while other PCs in the *Elektor* labs ran the program without a hitch. Ultimately, it turned out that the regional settings for this PC were different from those for the others. This also turned out to be the cause of the problem.

The problem occurs when a string is converted to a floatingpoint variable. The Delphi programming language always uses a full stop as the decimal separator character, but the routine FloatToStr uses the character selected by the regional settings. If a floating-point value is converted to a string (using Float- ToStr) and afterwards converted back to a floating-point value (using Val), the conversion will fail if a comma (,) is configured as the decimal separator in the Windows regional settings.

An initial solution was quickly found: during program initialisation, the value of the system variable 'Decimalseparator' is set to '.'. This variable is used by FloatToStr to determine which character to use in the position of the decimal separator character. If a full stop is always used, the Val function will not have any problem converting the string back into a floating-point variable.

Still, we were not completely satisfied with this solution, since the original problem occurred again if we changed the regional settings of the system while the program was running,. Fortunately, this minor difficulty was quickly remedied by adding the following line to the project:

```
Application.UpdateFormatSettings:=false;
```

This line prevents the program from adopting any changes made to the Windows settings.

A small sample program that can convert a string to a variable and the other way around without being adversely affected by the regional settings can be downloaded from the Elektor website (*www.elektor.com*), look for file number 034066-11 (July/August 2003).

(034066-1)

219 Light Gate with Counter

HOME AND GARDEN

T. Hareendran

The circuit described here counts the number of times that an infrared beam is interrupted. It could be used to count the number of people entering a room, for instance, or how often a ball or another object passes through an opening (handy for playing shuffleboard).

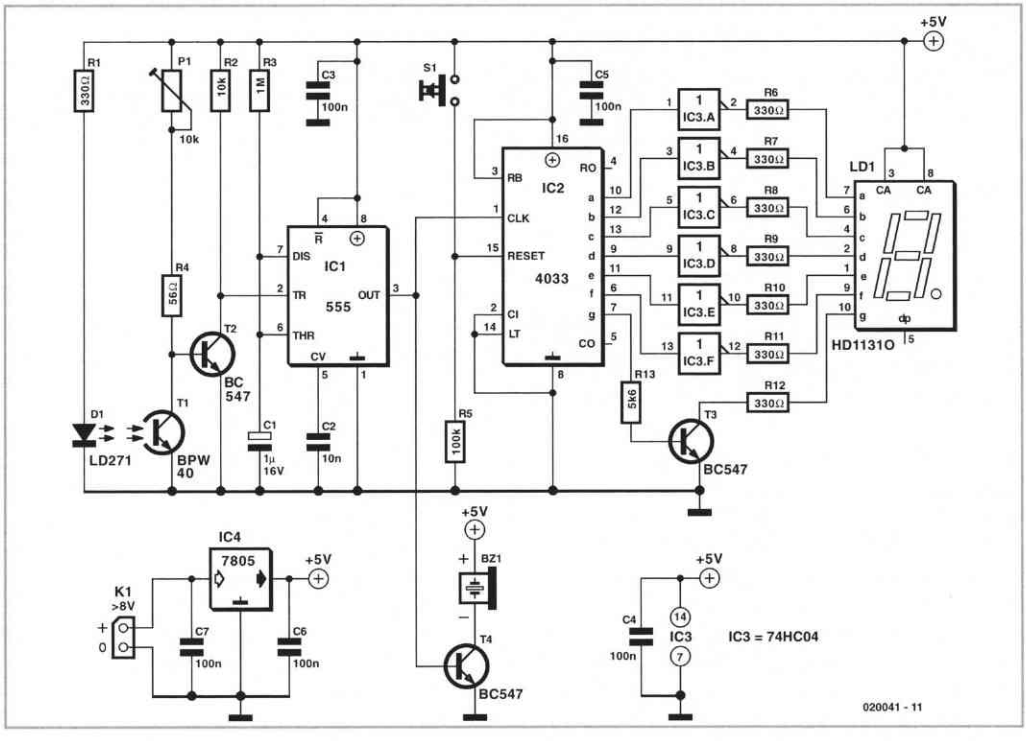

The heart of the circuit consists of – you guessed it – a light gate! Diode D1 is an IR diode that normally illuminates IR transistor T1. The light falling on T1 causes it to conduct to a certain extent. The resulting voltage on the collector of T1 should be just low enough to prevent the following transistor (T2) from conducting. This voltage can be adjusted within certain limits using P1.

As soon as an object comes between D1 and T1, the light shining on T1 will be partially or fully blocked, causing the IR transistor to conduct less current. As a result, the voltage on its collector will increase, producing a brief rise in the voltage on the base of T2. This will cause T2 to conduct and generate a negative edge at IC1. This negative edge will trigger the monostable multivibrator, which will then hold the output signal on pin 3 'high' for a certain length of time (in this case, one second).

At this point, two things will occur. First, a buzzer will be energised by the output of IC1 and produce a tone for approximately one second. When the buzzer stops, a negative edge will be applied to the clock input of IC2, causing the counter in IC2 to be incremented by 1. IC2 is conveniently equipped with an internal binary-to-BCD decoder, so its outputs only have to be buffered by IC3 and T3 to allow the state of the counter to be shown on the 7-segment display. Switch S1 can be used to reset the counter to zero.

If a one-second interval does not suit your wishes, you can modify the values of R3 or C1 to adjust the time. Increasing the value of R3 lengthens the interval, and decreasing it naturally shortens the interval. The same is true of C1.

When building the circuit, make sure that T1 is well illuminated by the light from D1, while at the same time ensuring that T1 'sees' as little ambient light as possible. This can best be done by fitting T1 in a small tube that is precisely aimed toward D1. The longer the tube, the less ambient light will reach T1.

The sensitivity of the circuit can be adjusted using P1.

(020041-1)

220 Sensor for Line Following Robots

David Gustafik

One of the traditional 'disciplines' in which robots are supposed to compete is the Line Follower Competition. Robots go along a predrawn black line (usually duct tape) on a white-ish surface (usually paper, cardboard or plastic).

This discipline requires special sensors. Usually, these are made out of reflective optosensors (such as CNY70, LTH-209). This sensor contains a phototransistor and an infrared LED. These sensors are pointed at the surface on which the robot is supposed to show off its speed and agility. The LED emits infrared light on the surface and the phototransistor acts as a receiver. The black coloured line to follow reflects far less light than the white surface it is affixed on.

The current that flows through a phototransistor depends on the intensity of the light detected. Therefore, more current will flow through the transistor when it is above a white surface. In this way, the sensor can also be used as a surface detector.

The minimal count of sensors necessary for making a line following robot is... two — one on the left side and one on the right. It is advisable to use at least three sensors – one left, one right and one in the middle as a failsafe precaution against the robot dropping off a table edge.

In this circuit, the voltage on the phototransistor is compared with a reference level set by P1. When IC2 is illuminated, the voltage on it drops. Comparator IC1A compares the voltage against the set reference. If the reference voltage is higher than that on phototransistor, the comparator's output is drops to (almost) zero. This occurs when there is a black line under the sensor. The

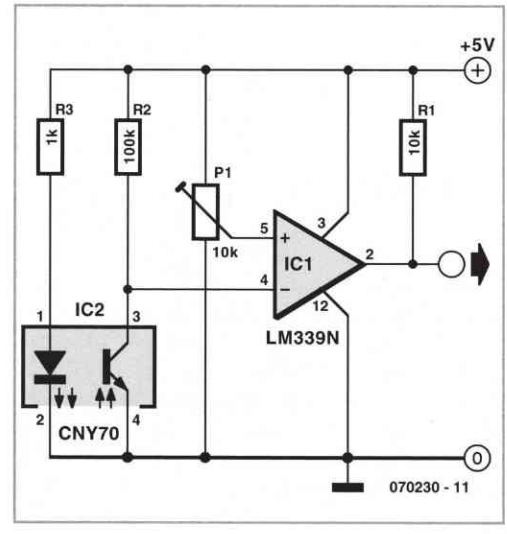

output signal from the comparator is then connected to either a microprocessor or any control logic that (hopefully) responds by adjusting the course of the robot.

The circuits needs to be calibrated before use. The best method is to set the P1 preset to the centre of its travel. Next, place the sensor above the surface it is supposed to detect, where it is white. Note that the height of the sensor above the surface is important. It doesn't matter that much when using for instance a CNY70, but an LTH209 for example only works in a very small range of heights (around 3.8 mm). If the response from the output of the comparator is good (i.e., pin 2 High) move the sensor above a line. If the result is again as expected (pin 2 Low) you're done calibrating the circuit. If not, repeat the process and adjust P1 until the correct calibration is achieved.

The schematic for only one of four channels that can be made with just one LM339 IC. The pull-up resistor at comparator pin 2 is used because the LM339 has open-collector out-

puts. R3 determines the current going to the IRLED.
Many comparators can be used, the LM339N just happened to be available. The same may apply largely to the optosensor, but note that many different pinouts exist so check out that datasheet.

(070230-I)

221 12 V Bidirectional Motor Control

ACTUATORS

Stefan Brandstetter

This simple circuit drives DC motors with a maximum current of 1 A and can be built with readily available components. The output voltage is adjustable between 0 and 14 V and the polarity can be changed so that not only motor speed but also rotation direction can be adjusted by turning a knob. The circuit is also ideal as a controller for a DC model railway or small low-voltage hobby tool.

Power for the circuit is supplied by a 18 V mains transformer rated at 1.5 A. Diodes D1to D4 rectify the supply and capacitor C1 provides smoothing to give a DC output voltage of around 24 V. A classic 'H' bridge configuration is made up with transistors T1/T3 and T2/T4. Transistors T5 and T6 together with resistors R7 and R8 provide the current sense and limiting mechanism. The maximum output current limit can be changed from 1 A by using different value resistors for R7 and R8:

$$I_{OUT} = \frac{0.6\ V}{R}$$

where R gives the value for R7 and R8.

For increased current limit the mains transformer and diodes will need to be changed to cope with the extra current as well as the four transistors used in the bridge configuration. Motor speed control and direction is controlled by a twin-ganged linear pot (P1). The two

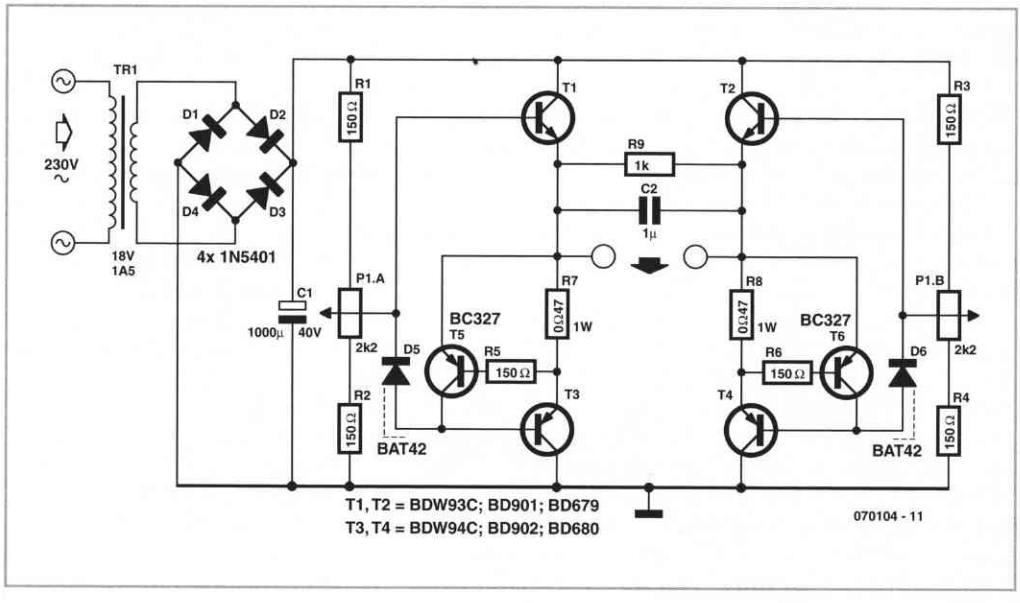

tracks of P1 together with R1/R2 and R3/R4 form two adjustable potential divider networks. Wiring to the track ends are reversed so that as the pot is turned the output voltage of one potential divider increases while the other decreases and vice versa. In the midway position both dividers are at the same voltage so there is no potential difference and the motor is stationary. As the pot is rotated the potential difference across the motor increases and it runs faster. The voltage drop across D5 and D6 is equal to the forward voltage drop VBE of the bridge transistors and ensures that the motor does not oscillate in the off position with the pot at its mid point.

(070104-I)

222 'TEAclipper' Postage-stamp Programmer

MICROCONTROLLERS

Richard Hoptroff

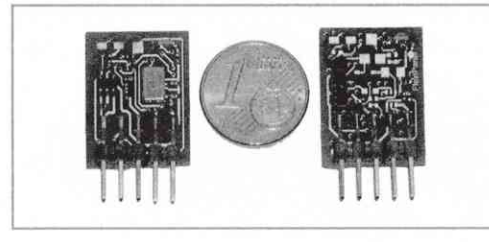

The art of discrete electronics has, over the past decade or so, become subsumed by machine code inside microcontrollers. The firmware is the magic in today's electronic circuits, and rightly so. It's faster, cheaper, easier and more flexible than making changes to the hardware.

Unfortunately, exchanging firmware between people remains in the Dark Ages. If you want to buy someone else's firmware, what can you do? At best you buy a pre-programmed chip from the creator or from a publishing service such as Elektor Shop or *www.hexwax.com*. Worst case, you get a hex file and program the microcontroller yourself – provided you have all the necessary equipment to do so. And if there's a bug in the firmware, it's not exactly easy to get an upgrade.

If only firmware could be more like software. Software is so easy to deliver that we do it without thinking, and as such has generated one of the most profitable industries in the world.

Having the size of a postage stamp, the TEAclipper from FlexiPanel Ltd seems a step in the right direction (*www. flexipanel.com*).

This microcontroller programmer is an easy, reliable firmware delivery mechanism. It can be pre-loaded with firmware and mailed to a customer, or the customer can download firmware over the internet and send it to the TEAclipper via a USB adapter. The TEAclipper is then inserted into the target PCB and generates all the signals necessary to program the microcontroller.

Connection is via a 5-pin header which also provides power to the TEAclipper. Since only a temporary connection is required, a socket is not necessarily needed. The pins can be pressed against plated-through holes in the PCB for the few seconds required for programming.

The number of programming cycles can be specified, after which the memory selferases. This allows firmware to be bought and sold in fixed quantities.

TEAclippers are currently available for programming Parallax's BASIC Stamps and Microchip's PIC Microcontrollers, but support for further microcontroller platforms is planned.

(070117-I)

223 3-A Wide-input Adjustable Switching Regulator

Luc Lemmens

The PTN78060 is a series of high-efficiency, buck-boost, integrated switching regulators (ISR) from good old Texas Instruments (TI).

The caseless, double-sided package has excellent thermal characteristics, and is RoHs compliant.

The PTN78060 devices operate from a remarkably wide input voltage range:

Device	V_{in}	V_{out}
PTN78060WA(x)	7...36 V	2,5...12,6 V
PTN78060HA(x)	15...36 V	11,85...22,0 V
PTN78060AA(x)	9...29 V	–15...–3 V

Note that the –A version supplies a negative output voltage.

The devices provide high-efficiency stepdown voltage conversion for loads of up to 3 A.

The PTN78060 devices are suited to a wide variety of general-purpose applications that operate off 12-V, 24-V, or tightly regulated 28-V dc power, hence are ideal for running low-voltage electronics from a very high power 24-V battery unit salvaged from an electric wheel chair and migrated into a robot.

The output voltage V_O can be set to any value over a wide adjustment range using a single external resistor RSET, using the equation

$$R_{SET} = 54.9\ k\Omega \times \frac{1.25\ V}{V_O - V_{MIN}} - R_P$$

If pin 4 is left open, the output voltage defaults to the lowest value. Limiting ourselves to the two positive-output regulators, for the -W version, V_{MIN} and R_P are 2.5 V and 6.49 kΩ respectively; for the -H device, the values 11.824 V and 6.65 kΩ should be used.

For the output to remain in regulation, the input voltage must exceed the output by a minimum differential voltage. Another consideration is the pulsewidth modulation (PWM) range of the regulator's internal control circuit. For stable operation, its operating duty cycle should not be lower than a certain minimum percentage. This defines the maximum advisable ratio between the regulator input and output voltage magnitudes.
For satisfactory performance, the operating input voltage range of the PTN78060x must satisfy the following requirements.

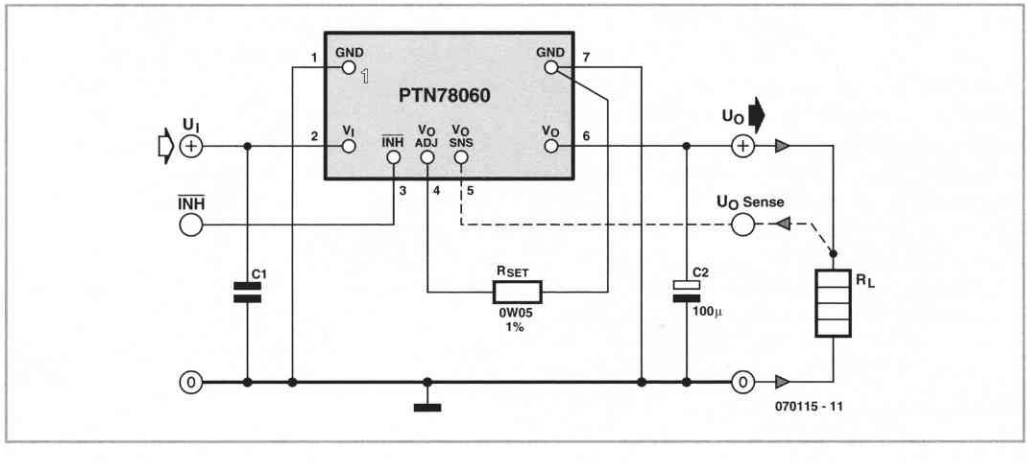

Table				
Device	**V_O** (V) ***(desired)***	**R_{SET}** (kΩ) ***(standard value)***	**V_O** (V) ***(actual value)***	**V_I-range** (V)
PTN780x0W	2,5	Open	2,5	7...25
	3,3	78,7	3,306	7...33
	5,0	21,0	4,996	7...36
	12,0	0,732	12,002	14,5...36
PTN780x0H	12,0	383	12,000	15...36
	15,8	15,0	14,994	18...36
	18,0	4,42	18,023	21...36
	22,0	95,3	21,998	26...36

1 For PTN78060W devices supplying output voltages lower than 10 V, the minimum input voltage is (V_O+2 V) or 7 V, whichever is higher.

2 For PTN78060Ws supplying output voltages of 10 V and higher, the minimum input voltage is (V_O+2.5 V).

3 The maximum input voltage for PTN78060W is 10·V_O or 36 V, whichever is less.

4 For PTN78060H output voltages lower than 19 V, the minimum input voltage is (V_O+3 V) or 15 V, whichever is higher.

5 For PTN78060H output voltages equal to 19 V and higher, the minimum input voltage is (V_O+4 V).

As an example, the **Table** gives the operating input voltage range for some commonly used output bus voltages.

The modules are protected against load faults with a continuous current limit characteristic. Under a load-fault condition, the output current increases to the current limit threshold. Attempting to draw current that exceeds the current limit threshold causes the module to progressively reduce its output voltage. Current is continuously supplied to the load until the fault is removed. Once it is removed, the output voltage promptly recovers. When limiting output current, the regulator experiences higher power dissipation, which increases its temperature. If the temperature increase is excessive, the module overtemperature protection begins to periodically turn the output voltage off.

The inhibit feature can be used wherever there is a requirement for the output voltage to be turned off. The power module switches off the output voltage when the Inhibit control (pin 3) is pulled to ground, for example, by a switching FET.

Finally, good attention should be paid to the quality of the capacitors on V_I and V_O as they determine the regulator stability and overall performance to a substantial degree. Summarizing the extensive information on capacitor selection found in the datasheets, the minimum requirement for C1 is 2.2 μF (!) worth of ceramic capacitors for the –W device and 14.1 μF (!) for the-H device. Tantalum caps are not recommended.

Similarly, at the regulator output, C2 should be at least 100 μF worth of low-ESR electrolytics.

(070115-I)

Datasheets
http://focus.ti.com/docs/prod/folders/print/ptn78060h.html
http://focus.ti.com/docs/prod/folders/print/ptn78060w.html
http://focus.ti.com/docs/prod/folders/print/ptn78060a.html

224 Antieu-robot

MECHANICS

Abraham Vreugdenhil

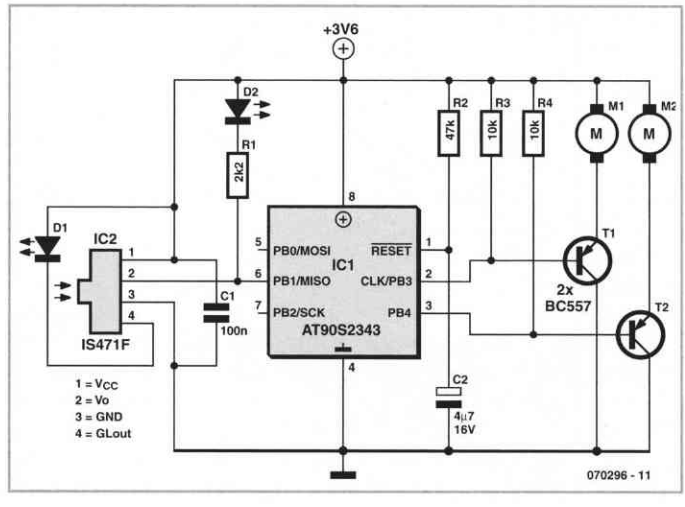

The name of this robot is actually a bit ambiguous. The hyphen in the name can also be placed in a different position, giving the name 'anti-Eurobot'. This refers to the wheels, which have been made from pre-Euro coins.

The motto of this robot is 'small but functional'. How small can we make a stand-alone robot?
To start with we'll need very small motors. The author found that the motors used as vibrators in mobile phones were perfectly suitable. These so-called pager-motors are small and run very fast. They normally come with a small weight, which is mounted off-centre on the spindle to generate the vibrations. This can easily be removed with a pair of cutters.

The two motors are driven by a pair of simple BC557 or BC537 transistors. At the base of the transistor we connect a 10 k pull-up resistor.

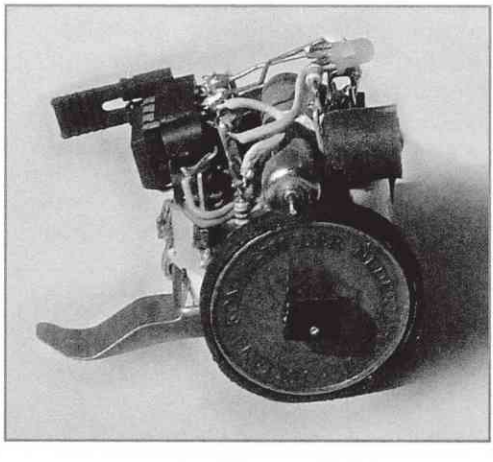

We also require a small processor. The AVR range from Atmel includes an 8-pin version, the 90S2343. Apart from the two supply pins and the reset pin it has 5 I/O pins. This may not look like much, but a simple robot doesn't need many.

The biggest problem is the power source. For this we've chosen a 3.6 V 160 mAh NiMH battery, which has small dimensions. This battery is used as a frame, with the rest of the circuit built around it.

The last component we need is a sensor to detect obstacles. For this we used an IS471F infrared sensor. It reacts to an IR signal that's generated by an IR LED controlled via the same sensor.

And finally we come to the wheels. In keeping with the name of the robot, the author used some old-fashioned Dutch 5-cent pieces for these. We realise that these are difficult to get hold of outside The Netherlands and any other copper coins with a diameter of about 21mm will do as well. Two coins were glued together and we drilled a 1 mm hole through

the centre for the axle. A small ring can be cut from a bicycle inner tube and glued to the coins to make the tyre. The neck of a balloon is also suitable to give the wheels more grip. If we let the robot travel too fast and then stop it, it would be liable to topple due to its weight and high centre of gravity. Because of this we've limited its speed. This also results in a less nervous looking robot.

The revs of the motors are much too high with a 3.6 V supply. Using a pulse width modulation of 25% reduces it to a manageable level. We don't let the Antieu-robot ride continuously either, but let it stop at certain intervals. The main reason for this is that it stops it racing to the edge of its area; the other reason is that it gives it a somewhat intelligent and thoughtful characteristic. It almost appears as if it's studying its surroundings before continuing on its journey. When an obstacle is encountered it will turn left or right, depending on an internal counter. If it still sees the obstacle it continues turning in the same direction until the obstacle disappears from view.

The program gives the robot a simple object avoiding behaviour. The robot rides along until it sees an object, which it will then try to get around. Only about 600 bytes have been used of the available 2 k of program memory. There is therefore sufficient space to program in a more intelligent behaviour or to add an extra sensor and modify the program accordingly. The Antieurobot is programmed in BASIC. The code is compiled using BASCOM-AVR. This is a very good compiler made by MCSELEC. For more information and a free demo version go to *www.mcselec.com*.

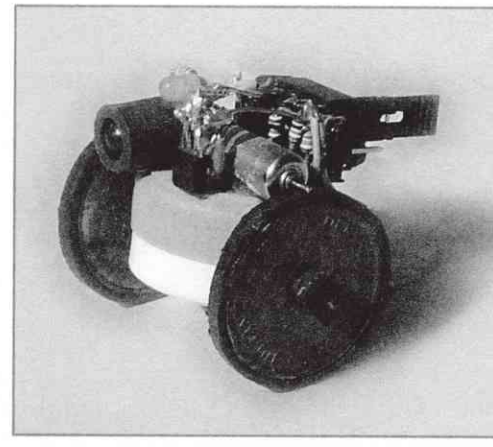

As an enhancement you could add a power contact at the top of the Antieurobot, with a corresponding power source hanging at the right height somewhere in the room. When it makes contact with this power source the robot could take a bit of a rest whilst it recharges its battery.

The program for the Antieu-robot can be downloaded from the Elektor website as file number 070296-11.zip.

(070296-I)

225 IR Remote Control with the R8C

COMMUNICATIONS

G. van Zeijts

Over the years various articles have appeared in *Elektor Electronics* about microcontrollers that pick up the pulses from an IR remote control and do something with it.
Unfortunately this capability was not available for the R8C microcontroller until now. That is why the author plunged right in and created this capability, mainly for his own use but also made it available to others who may be interested.
The functionality has been designed in such a way that it can optionally be used with either a Philips (RC5) or Sony remote control.
The system provides a 7-bit code at an output port, to 'inform' a computer or other microcontroller which button has been pressed.

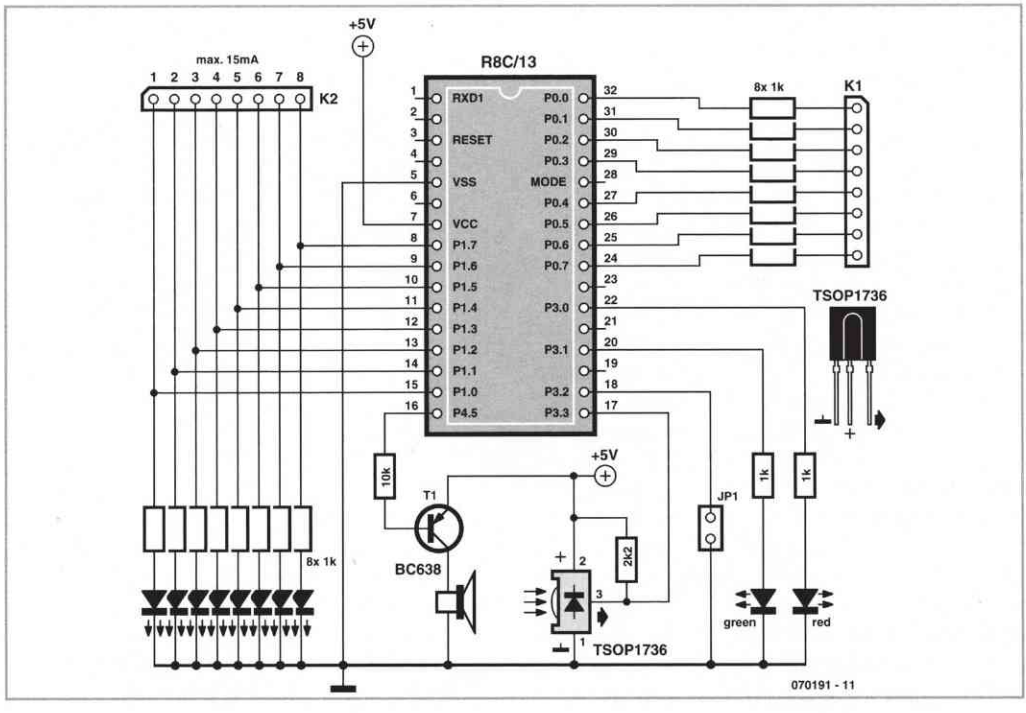

The 8 bits of the other output port can be controlled directly with the buttons 2 through 9 of the remote control. This allows 8 digital devices to be directly switched or controlled remotely.

The program has been written in C using the HEW software and has the following functions.

Depending on the position of jumper JP1, pulses from Philips (RC5) are decoded (open) or pulses from Sony (jumper in place).

1 Bit 7 of port P0 indicates whether RC5 or Sony pulses are being used. Bit 7 'High' = RC5 and bit 7 'Low' = Sony.

2 The code for the most recent button that was pressed is on port P0. Bits 0 through to 6 are used for this. Bit 7 is used to indicate RC5 or Sony.

3 The eight bits on port P1 (output) are directly driven high or low with buttons 2 through 9 of the remote control. When the button is pressed for the first time the output goes high. The next press makes the output low. These eight buttons can therefore control eight digital things from a distance. The state of all the bits on port P1 are not affected by pressing any of the other buttons on the remote control, with exception of the following three.
Button '1' makes all eight bits of P1 high.
Button '0' and button 'off' make all eight bits of P1 low.
Eight LEDs indicate the present state of the eight bits – they load port P1 with about 3 mA. Via connector K2, P1 can therefore be loaded for 'heavier' purposes with a further 17 mA at the very most (but allow a margin just to be safe, so 15 mA max, for example).

4 If RC5 is selected with JP1 (open) and the microcontroller receives pulses from a 'non-RC5' remote control (or the other way around) a short alarm signal results:

- The red LED on P3.0 flashes briefly;
- The outputs 0 to 6 of port P0 become

'0' (= no standard code);
- Bit 7 of port P0 gives a flashing signal;
- Brief acoustic signal on pin 16 (bit P4.5).

A short description of the schematic

The well-known TSOP1736 (infra-red detector) is directly connected to the input and its output is pulled high with a 2k2 resistor.
A second input is used to read the state of jumper JP1 (select between RC5/Sony).

Output P0 is used to signal the RC5/Sony-code in hexadecimal form. These outputs can be directly connected to another computer or microcontroller through the 1 k resistors, with the intention that this computer/microcontroller can act on the received code.

Output P1 can be used by the user to switch a 'digital something' with an interface circuit that you have to build yourself. (K2 can be loaded with a maximum of 15 mA.)
Low-power LEDs indicate the present state of the eight bits of port P1.
The green LED on pin 20 functions as on/off indicator for the circuit.

It is of course also possible to use a piezo buzzer for the acoustic alarm on P4.5 (P4.5 may be loaded by up to 8 mA).

(070191-I)

The software for this project is a free download from the Elektor website: file 070191-11.zip

226 Chaotic LED Fireflies

MISCELLANEOUS ELECTRONICS AND DESIGN IDEAS

Jonathan Hare

Here we couple LED oscillators together to produce some interesting effects for an exclusive optical touch to your robot.

As seen in the circuit diagram in **Figure 1**, instead of using the discharge pin on a 555, the timing capacitor can be charged and discharged using the output (via a preset P1). If we assume the 555's output resistance is very low (i.e. use a bipolar rather than a CMOS 555) this circuit provides a 50:50 mark-space ratio whose output frequency is independent of load. However, if we deliberately increase the output resistance by using a series resis-

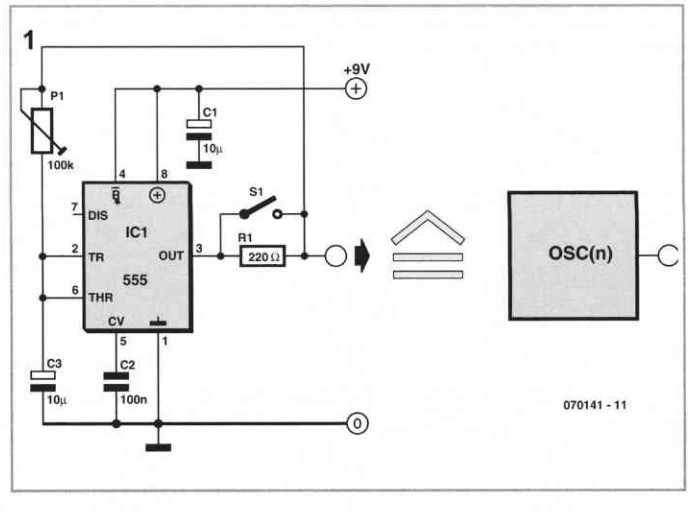

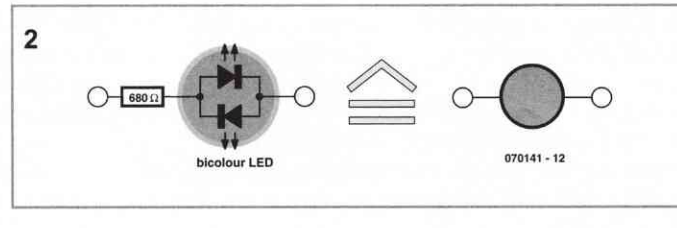

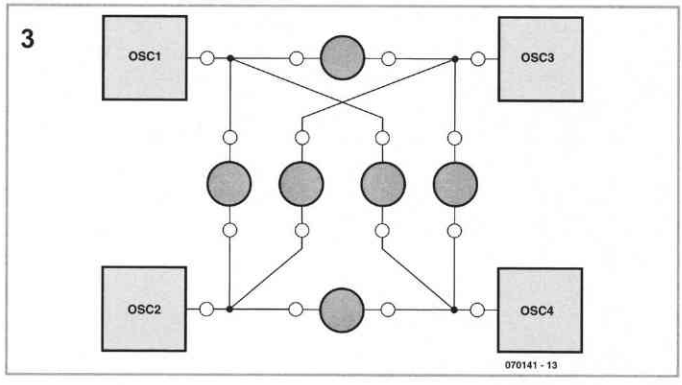

tor (R1) the timing will now also be dependent on the current taken by the load (because R1 will effectively drop the available charging voltage to the P1/C3 timing circuit). Now, imagine a number of such oscillators whose outputs are conected to each other via current limiting resistors and bicolour LEDs (**Figure 2**).

A possible constellation of oscillators and LEDs, each with their own symbol from Figures 1 and 2, is shown in **Figure 3**. Each oscillator's timing will be dependent on the state of the other oscillators because these will determine the current that flows through the LEDs. For example, if all the outputs are High (or all Low) there will be no potential differences and so no current will flow through the LED circuits. In this case, all the oscillators will be at maximum frequency. Other combinations of outputs will light some of the LEDs and these currents will thus effect each oscillators timing. Chaos rules! The R1s therefore couple the oscillators to each other. A switch across each R1 allows control of the coupling.

Setting the oscillator frequencies to about 2 Hz with the P1s shows the complex flashing of the LEDs switching between off, red and green. Sometimes the LEDs seem to settle down pulsing together. This is rather like an electronic version of what is observed in nature when a group of fireflies congregate in a bush — they pulse together and maybe our little circuit is a simple version of this rather complex natural feedback system.

If the frequency is raised to ca. 100 Hz, varying mixing (beating) of the flashing red and green colours cause a 'wave' of changing colour to go through the array of LEDs.

Including light dependent resistors (LDR) in series with R1 might be a way of making each of our LED fireflies 'see' each other. Even without the LDRs, with three or more coupled oscillators there might also be the intriguing possibility of observing chaotic behaviour of the oscillators.

(070141-I)

227 IR Close Object Detector

SENSORS

B. Broussas

Although ultrasound is well suited to detecting distant objects, it is quite unusable for closer objects, i.e. when the detection distance comes down to around a centimetre or less. Under these conditions, two solutions can be used: the bumper or similar device activating one or more microswitches – but that is still a mechanical solution – or the infra-red detector we're suggesting building here, combining the elegance of electronics with freedom from any moving parts.

The principle of such a detector is very simple. A transmitting element, which here is going to be a simple LED, emits a more or less directional beam of IR. Positioned next to this transmitter, a receiving element, which may be a photodiode or phototransistor, is suitably oriented so that under normal circum-

stances it doesn't receive anything. But as soon as an obstacle is present at a suitable distance, it reflects part of the light emitted by the LED back onto the photodiode or transistor; the presence of an output signal from the latter then indicates the proximity of this obstacle.

The distance up to which this process works properly very clearly depends on numerous factors: the luminous power emitted by the LED, the sensitivity of the detector, but also – and above all – on the reflective properties of the obstacle. A black cat will be much less easily detected than a white wall!

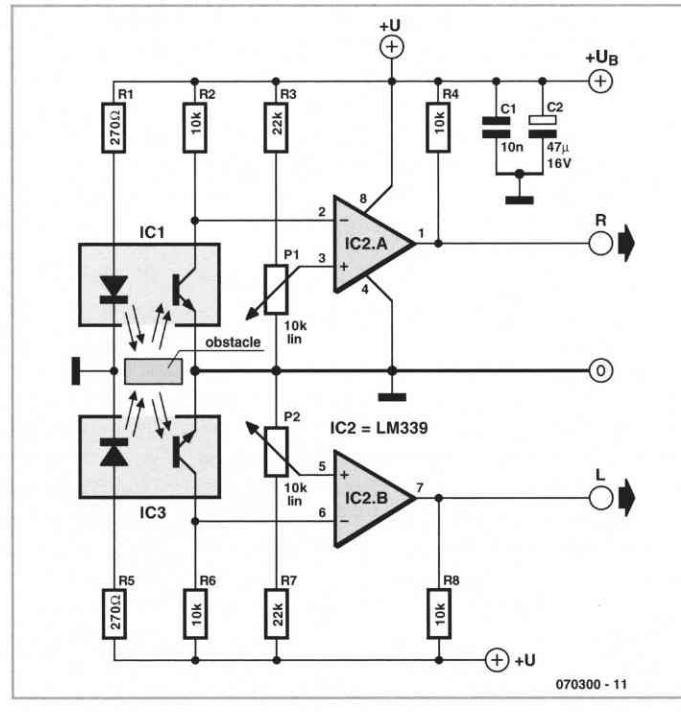

In answer to a question frequently asked in robotics classes, note that this principle works just as well using visible light, but the use of IR simply makes it possible to avoid, to some extent, the sensor is being dazzled by ambient light. Of course, if you use a robot fitted with such a sensor in full sunlight or beneath a halogen spot, this anti-dazzle effect probably won't be very effective, given the high level of IR radiated by such sources!

Note too that this system is not a telemeter, and so is unable to give the slightest information about the distance of the obstacle. The only parameter that actually relates to this distance is the amplitude of the reflected signal, but this depends also, indeed to a very large extent, on the reflective properties of the particular obstacle (think again of that black cat and white wall).

So, our detector is capable of operating over a range extending from a few mm to around 20 mm or so, depending on the type of sensor used. What's more, it's not confined to simple obstacle detection in the conventional sense. For example, in the case of a robot that's meant to stay on a table, all you have to do is judiciously position such detectors around the underside of the edge of the robot's chassis. As soon as it gets too close to the edge, the sensor stops receiving the signal reflected by the table, indicating that it needs to turn back.

Construction of our IR obstacle detector is very simple, as the figure shows. Given the IC used, it's possible to build two at once, which is not unhelpful. As the detection zone of such a system is relatively limited, we've planned to use two sensors that we've called R and L for right and left, though this doesn't bear any particular relation to their actual positions on the robot. The figure shows the circuit of a single channel, the other is obviously identical; only decoupling capacitors C1 and C2 are common to them both.

The LED in the sensor IC is permanently powered via resistor R1, while the collector of the phototransistor in this detector is taken to the positive rail via R2. So when the transistor is off, i.e. when it is not receiving any light, meaning there is no obstacle, we have a voltage at this point approaching the power rail. As the transistor starts conducting, that is,

when a sufficiently reflective and/or close obstacle reflects the light emitted by the diode back onto the phototransistor, this level drops.
This information is shaped by comparator IC2A, whose switching threshold can be adjusted using P1. In this way, the circuit can be adapted to different sensors and the detection range can be adjusted to some extent. The circuit output is TTL-compatible if it is powered from 5 V and, given the way IC2A's inputs are connected, it is logic high in the presence of an obstacle.
Construction is perfectly straightforward, but the effectiveness of the circuit depends on the correct choice of sensors. We suggest three types that we've tried out, in a price range from around £ 1 to £ 8, but there's nothing stopping you – quite the contrary, in fact – from trying out other types, or even making your own sensor using separate IR LEDs and phototransistors of your own choice.

The cheapest sensor is the CNY70 (around £ 1). It only detects at very short distances, of the order of 5 mm, and is easily dazzled by ambient light. At approximately four times the price, we found the HOA709-001 from Honeywell, available from Radiospares, amongst others. It too can only detect up to around 5 mm, but with significantly better efficiency than the CNY70, and it proves harder to dazzle. Lastly, if you double the stakes again (i.e. eight times the price of the CNY70), you can use the HOA1180-003, still from Honeywell, very hard to dazzle and which detects up to a distance of 15 mm.

(070300-I)

228 Driving Stepper Motors: KISS

ACTUATORS

Without using a specialised IC

B. Broussas

Used a great deal in robotics, where it is a direct competitor for DC motors and radio-control servos, the stepper motor does however suffer from the comparative difficulty encountered in driving it. Unlike its DC equivalents, which rotate as soon as power is applied, the stepper motor requires a succession of pulses applied to its various windings to make it turn. On the other hand, and provided its mechanical capacities are not exceeded, the number of basic steps moved by the motor corresponds to the number of pulses applied to its windings. Hence in this way we have available to us virtually automatic positioning information, impossible to obtain with a DC motor.

In many robots we've seen, driving the stepper motor(s) was the job of a specialized IC, one of the front-runners being the L293 from ST Microelectronics which, despite its age, is still very much current. Yet there are many other solutions, such as direct control by one of the ports of the microcontroller that runs the robot – or the one we are suggesting here, which just uses... two standard CMOS logic ICs!
As you maybe already know, there are actually two types of stepper motor: single-pole motors and 2-pole ones. While the first only need single pulses sent to their four windings, the latter require inversion of the signal polarity applied to the windings. So as not to complicate our circuit unduly, we have designed it for single-pole motors, the timing diagram for which is given in the **table** on the next page.
Reading the columns of this table from 1 to 4 corresponds to rotation of the motor in one direction, while going from 4 to 1 reverses the direction of rotation. Each column of this table corresponds to one mechanical step of the motor. These steps vary from 1.8° to 7.5°, depending on the type of motor chosen.

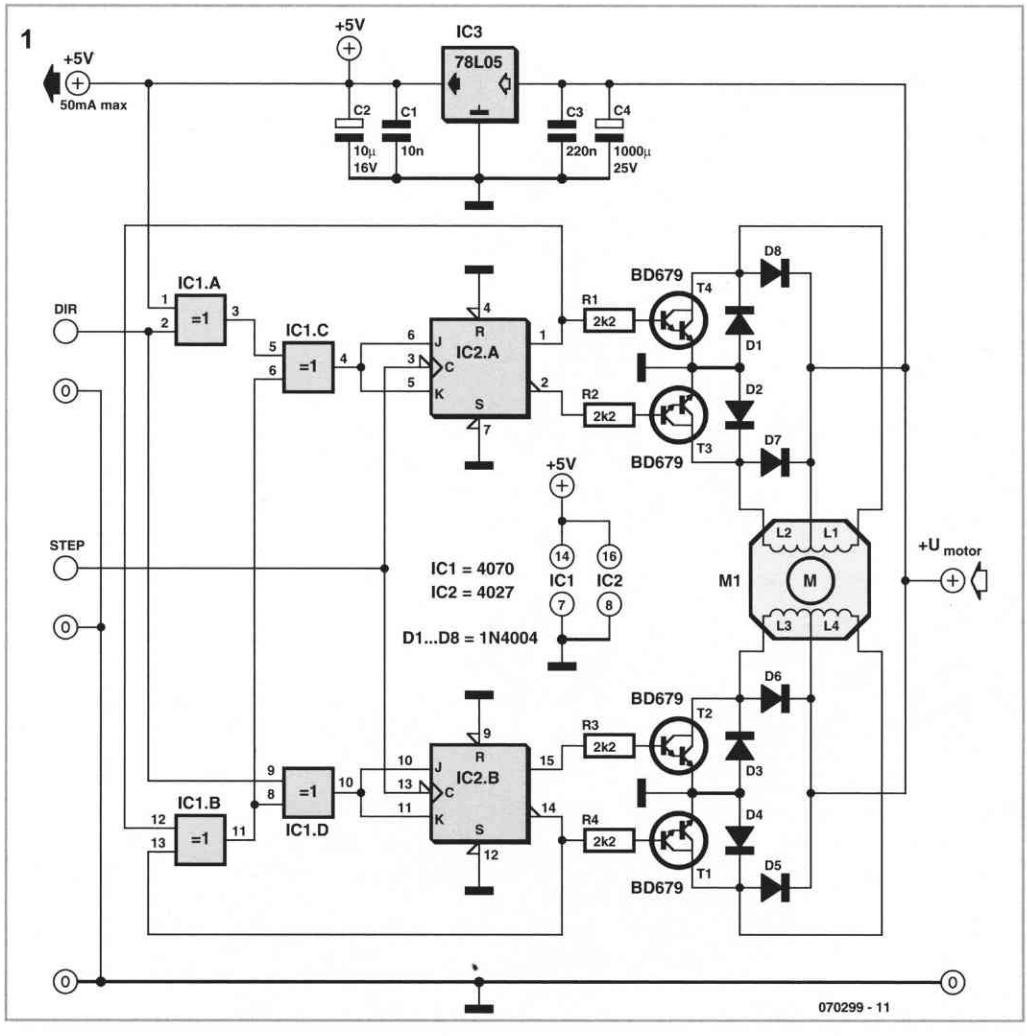

So the circuit of our driver without specialized ICs, shown in **Figure 1**, is very simple, since its 'intelligence' is in fact confined to two logic ICs, IC1 and IC2, which are simple exclusive-OR (XOR) gates and a dual J-K flip-flop, while the power stage is built around perfectly ordinary general-purpose bipolar transistors.

The pulses to make the motor turn must be applied to the STEP input. Each pulse makes the motor turn through a single step in one direction or the other; this direction is determined of course by the state of the DIR input. This acts on exclusive-OR gates IC1a and IC1d, used here as programmable invertors.

Remember that an exclusive-OR gate can be regarded as a gate that inverts or not the signal from one of its inputs depending on the state of its other input. This is easy to see from the truth table in **Figure 2**. If input A is '0', the output is the same as the signal applied to input B (0 gives 0 and 1 gives 1). However, if input A is '1', the signal applied to

Table

Step number	1	2	3	4
Winding 1	1	1	0	0
Winding 2	0	0	1	1
Winding 3	1	0	0	1
Winding 4	0	1	1	0

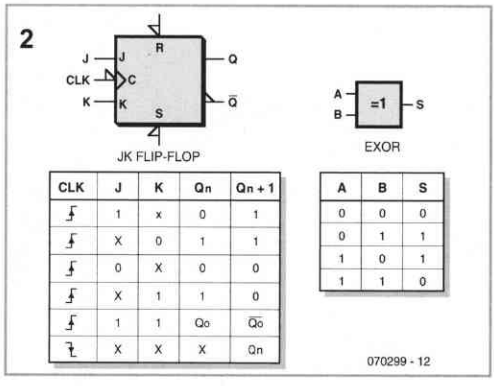

CLK	J	K	Qn	Qn + 1
↓	1	x	0	1
↓	X	0	1	1
↓	0	X	0	0
↓	X	1	1	0
↓	1	1	Qo	$\overline{Qo}$
↑	X	X	X	Qn

A	B	S
0	0	0
0	1	1
1	0	1
1	1	0

input B appears inverted at the output (0 gives 1 and 1 gives 0). Nothing very new there, but we did want to underline this interpretation of the truth table of the exclusive-OR used as a programmable inverter, as we have noticed that many of you aren't familiar with it (or have forgotten!)

The truly active part of the circuit is formed by the two J-K flip-flops IC2A and IC2B. **Figure 2** sums up the truth table for these flip-flops, which is made simpler here because J and K are always both at the same level. When these inputs are '1', the flip-flops change state at each clock pulse, i.e. for each pulse applied to the STEP input. In the reverse situation, i.e. when J and K are both '0', the outputs Q and $\overline{Q}$ remain in the previous state. If you still have doubts that this will indeed generate the timings in the table above, arm yourself with some graph paper, a pencil, and some patience, and draw out the timing diagrams of the signals supplied, when DIR is at some arbitrary level of your choice.

The power stage is built using bipolar transistors, protected from the voltage spikes generated by the current switching in the motor windings by diodes D1–D8. With the transistors used, it is possible to switch currents of up to 3 A, allowing plenty of flexibility in the choice of stepper motor.

The logic side of the circuit is powered from a fixed 5 V supply, stabilized by IC3, making the STEP and DIR inputs TTL-compatible. This supply may also be used to power the circuit prior to this driver, as long as you don't exceed around 50 mA with the regulator chosen.

If your motor is powered at 6 V, it is advisable to replace IC3 by an LM2936Z5, for example, which is a low-volts-drop 5 V regulator. For correct operation, the 78L05 originally specified for IC3 requires almost 2 V between input and output – clearly impossible to obtain with a motor supply of only 6 V.

Still on the subject of the motor supply voltage, note that it can be up to 24 V if necessary. As long as the current drawn by the motor doesn't exceed 1 A, the transistors don't need a heatsink, but one is advisable above that. It need only be a few cm^2, since the transistors are operating here in switching mode and so dissipate relatively little power.

(070299-I)

Web Link
L293 spec sheet:
www.st.com/stonline/books/pdf/docs/1328.pdf

229 Which Brain for my Robot?

MICROCONTROLLERS

A mini practical guide

C. Tavernier

More than any other electronics project, these days a robot can virtually not manage without at least one microcontroller to run it. So of course this raises the question of how best to select one, and this article is here to help you in this delicate task. Although the simplest robots can get by with virtually any type of microcontroller programmed in the language of your choice, as the

complexity of the robot increases, it becomes clear that certain ICs are more suitable than others for a purely robotic application.

So, after briefly discussing the special requirements typical of robots, we're going to present a certain number of microcontrollers and try to highlight their strengths in a robotics context.

The need creates the system

Compared to a conventional electronic project, a robot possesses certain particular features that have a direct influence on the choice of which microcontroller to fit it with. So whether it is fixed or mobile – and the first robots amateurs build are very often mobile, as these are admittedly the most spectacular – a robot always includes one or more motors. As you've been able to discover throughout this book, these may take the form of radio-control servos, stepper motors, or DC motors.

None of these are controlled in exactly the same way, but all of them require the microcontroller to know how to generate pulses more or less repetitively.

Our robot is obviously fitted with sensors. Although the simplest versions make do with simple 'whiskers' or contact-based obstacle detectors, as robots evolve, they become literally covered in sensors, some of which can be highly complex.

The information they furnish is most often digital, from the simple on/off information of an open or closed switch to the complex NMEA frames from a GPS receiver. A few, less common sensors also furnish information in analogue form, and it's important not to overlook these ones.

So our robot's microcontroller must have numerous parallel port lines for on/off type information, but also asynchronous and synchronous serial interfaces (I^2C, SPI, etc.) for sensors providing more complex information (electronic compasses, inclinometers, etc.), along with at least one analogue-to-digital converter for analogue information.

So far, everything we've been discussing is still within the scope of all current microcontrollers, and it's not much help to us in choosing. But the situation is actually more complicated than you might think from this discussion, which might be described as 'static'. When our robot is moving, there is a need to simultaneously control its motors, interpret the information provided by the sensors, and take the necessary decisions that entails.

On the simplest robots with a small number of sensors, all this can be managed using standard sequential programming; but as soon as the number or complexity of the sensors increases, the situation soon becomes unmanageable. It then becomes necessary to resort to multitasking, i.e. to a mode of operation in which the microcontroller handles the sensors, the motors, and the decision-making all together and 'at the same time'. Sadly, not all microcontrollers or programming languages are able to manage this by a long way.

The last particular feature of robots is that, unlike conventional electronics projects, they are often built by amateurs coming from backgrounds other than electronics. Mechanics, modellers, those who are simply curious all get involved in designing robots.

For all these designers, who contribute a great deal to the world of robotics as they have a different view from the electronics enthusiasts, the microcontroller needs to be simple to implement and program. This simplicity sometimes founders on the reef of the multitasking we've just been talking about, but we're going to see that, by judiciously choosing the microcontroller, it is possible to reconcile the irreconcilable.

Ordinary or special microcontrollers?

If electronics no longer holds any secrets for you and if you're not afraid of programming, you can obviously choose a standard microcontroller for your robot. PIC from Microchip, AVR from Atmel, etc. The list is long, especially as each manufacturer offers a wide range of ICs with a great variety of resources.

Hence from Microchip, the PIC18 family is gradually supplanting the PIC16 family that has been delighting amateurs for many years. These new ICs actually perform better, are more powerful, and hardly any dearer. As for the development tools, the unassailable MPLAB, increasingly userfriendly and of course still free, works just as well for either, so the transition is a gentle one. And if the power of the PIC18 isn't enough for you, the PIC24 family is all ready to replace it, as discussed in Elektor issue 343's presentation of the Explorer-16.

It's the same picture with Atmel, where the AVR ICs from the ATmega range – scarce and expensive just a few years ago – are now within everyone's pocket, with their innumerable internal resources and sometimes impressive memory capacities. Here again, the AVR Studio development tool is free and available from the Atmel website.

In spite of all that, it's not these 'classic' ICs that we're going to be looking at – especially since this subject has already been covered in *Elektor* (issue 322), but some 'special' microcontrollers that are proving highly successful in robotics because of their easy implementation and the particular features of their programming languages.

You're probably familiar with the oldest of them, none other than the famous Basic Stamp – but these days this is far from being the only one. Originally dreamt up by Parallax, this concept has had its imitators, and ever since we've seen numerous microcontrollers coming onto the market aspiring to be its descendants, while of course claiming to do much better. So these ICs are the ones we suggest you choose from.

A forerunner that has aged well

For those of you who might not already know it, the Basic Stamp, developed and marketed in 1993 in the United States by Parallax, is a microcontroller that behaves as if it were directly programmable in Basic – but this particular feature is far from being the only one to have ensured its success. It is also a ready-to-use microcontroller, needing neither a clock crystal, an external reset circuit, nor even a stabilized supply to operate. All this is already built in.

Like any self-respecting microcontroller, the Basic Stamp has to be programmed, but this programming is done in Basic, easy to use and accessible to everyone, to the point it has almost become a standard upon which all its successors have been based. No programmer is required, as it only amounts to... a simple cable to link the Basic Stamp to the serial port of any PC, even an old or very basic model. The development tool, intended for program-writing, is completely free and available for download from the Parallax website.

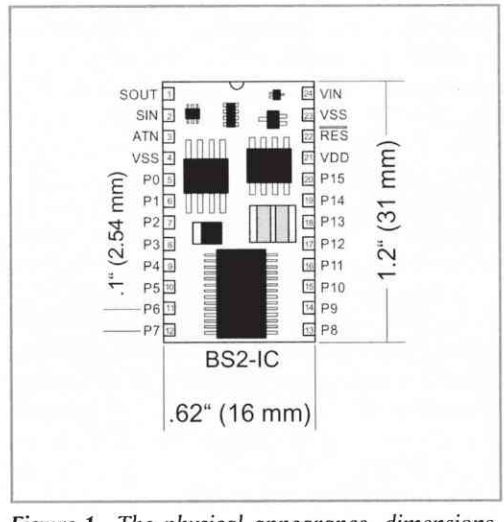

Figure 1 *The physical appearance, dimensions, and pinout of the Basic Stamp 2 have been taken up by many of its competitors: Basic Atom 24, Javelin Stamp, Cubloc CB220 amongst others.*

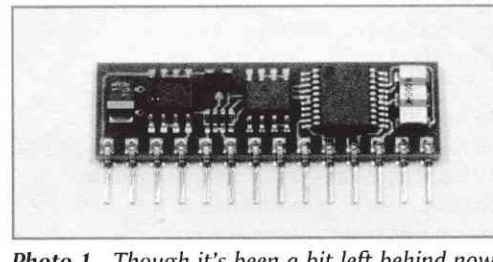

Photo 1 *Though it's been a bit left behind now, here's the father of all the Basic Stamps, the Basic Stamp 1.*

Table 1		
Name	**Pin**	**Function**
S_{OUT}	1	Programming output (PC serial port)
S_{IN}	2	Programming input (PC serial port)
ATN	3	Programming input (PC serial port)
V_{SS}	4, 23	Ground
P0...P15	5...20	Input/output ports
V_{DD}	21	5 V stabilized output (input if V_{IN} is too low)
RST	22	Manual external reset input (if required)
V_{IN}	24	Unstabilized positive supply from 5...15 V (12 V for 2E, 2SX, and 2P24)

Table 1 *Pinout for the Basic Stamp 2 in the 24-pin package, adopted by many of its competitors (Basic Atom 24, Cubloc CB220, Javelin Stamp, among others).*

Even though the simplest of all the Basic Stamps, the Basic Stamp 1, can be used to drive a robot, we unhesitatingly advise using at least the Basic Stamp 2, to benefit from the more numerous resources and a fuller instruction set. What's more, many successors to the Basic Stamp 2 (referred to from now on as BS2) are pin-compatible with it, allowing for possible future upgrading as a robot evolves, without needing to modify the associated electronics.

Figure 1 show both the physical appearance of the BS2 and its pinout, while the functions of the various signals available are listed in **Table 1**. Like all its successors, the Basic Stamp is not a 'true' integrated circuit, but a tiny PCB the size of a 24- pin DIL IC fitted with a number of SMD components, including a microcontroller, its clock and reset circuitry, an EEPROM memory for storing the program, and a 5 V regulator to power it.

Based on an 'old' PIC16C57 at 20 MHz, the BS2 is programmed directly in Basic, sometimes called PBasic, and is capable of executing around 4,000 instructions per second, while its memory can store around 500 lines of program. Its planetary success, and the word is not too strong, has pushed Parallax to put onto the market other BS2s, whose strong points are summed up here rapidly.

The first evolution to have seen the light of day, the Basic Stamp 2SX or BS2SX, is in fact a significantly faster version of the BS2. It executes on average 10,000 instructions per second, by replacing the BS2's microcontroller with a SX28 from Ubicom.

The program memory is also larger, accepting around 4,000 lines of program. All this is of course transparent for the user and the BS2SX instruction set is identical the BS2's, apart from three new instructions to manage this extra memory.

The BS2SX and its relatively large program memory created a demand among certain Basic Stamp users wanting to benefit from this much larger memory, but not needing the speed (and hence the price-tag!) of the BS2SX. So Parallax has offered them the Basic Stamp 2E – simply a 'degraded' version, in

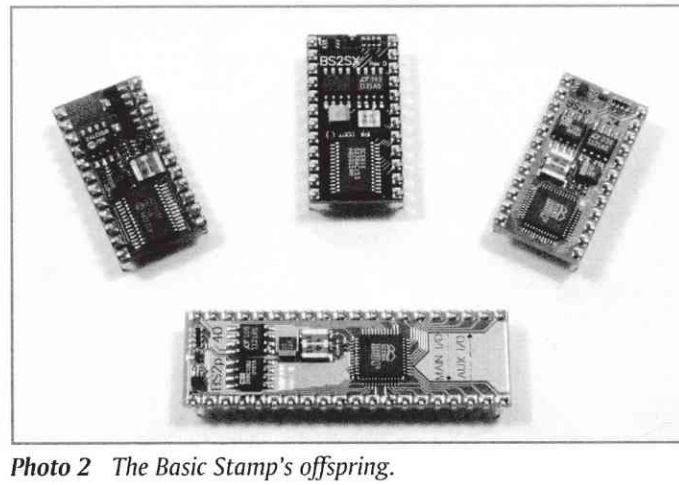

Photo 2 *The Basic Stamp's offspring.*

Table 2						
Parameter	**Basic Stamp 2**	**Basic Stamp 2SX**	**Basic Stamp 2E**	**Basic Stamp 2P24**	**Basic Stamp 2P40**	**Javelin Stamp**
Microcontroller	PIC16C57	SX28	SX28	SX48	SX48	SX48
Clock Frequency	20 MHz	50 MHz	20 MHz	20 MHz	20 MHz	25 MHz
Program memory (bytes)	2 K	8 x 2 K	8 x 2 K	8 x 2 K	8 x 2 K	32 K
Program memory (instructions)	500	4.000	4.000	4.000	4.000	–
Working memory (bytes)	32	32	32	38	38	32 K
Scratch memory (bytes)	–	64	64	128	128	–
Speed (instr./sec)	4.000	10.000	4.000	12.000	12.000	8.500
Nr. of Basic-instructions	36	39	39	55	55	0 (Java)
Parallel inputs/outputs	16	16	16	16	32	16
Max. sink/source-current per output	20/25 mA	30/30 mA	30/30 mA	30/30 mA	30/30 mA	30/30 mA
Max. sink/source-current per chip/per group of 8 inputs/outputs	40/50 mA	60/60 mA	60/60 mA	60/60 mA	60/60 mA	60/60 mA
Programming interface	PC serial port 9,600 baud	PC serial port 9,600 baud	PC serial port 9,600 baud	PC serial port 9,600 baud	PC serial port 9,600 baud	PC serial port 9,600 baud
Supply voltage	5...15 V	5...12 V	5...12 V	5...12 V	5...12 V	5...24 V
Operating current	8 mA	60 mA	20 mA	40 mA	40 mA	80 mA
Stand-by current	100 μA	200 μA	100 μA	400 μA	400 μA	no stand-by mode

Table 2 *Principal characteristics of the various BASIC Stamps and the Javelin Stamp.*

terms of speed only, of the BS2SX. So, the Basic Stamp 2E has all the characteristics of the BS2SX, but offers the same program execution speed as the BS2.

The Basic Stamp 2P24s and 2P40s offer more innovations, but can be presented together as their characteristics are identical except for one detail we'll look at in a moment. Apart from being faster than the already fast BS2SX, achieving 12,000 instructions per second, they also have an extended instruction set. The 36 or 39 instructions of the BS2 or BS2SX increase to 55, introducing some very powerful and extremely handy instructions capable of directly driving an LCD alphanumeric display, talking to peripherals over the I2C bus, or driving ICs with a Dallas '1-Wire' bus. This evolution is done cleverly, however, and the same 36 BS2 instructions are included within the 55 instructions of the BS2P24 and BS2P40. The BS2P24 uses a pinout compatible with the other Basic Stamps, while the BS2P40 uses the 40-pin DIL IC format, allowing it to have 16 additional parallel port lines compared with the 24-pin packages.

To help guide your choice, **Table 2** summarizes the most important details of the various versions of Basic Stamp. Note that, for reasons of convenience, it includes the Javelin Stamp, described later.

All these Basic Stamps are wonderful in robots, as their instruction set has really been designed for microcontroller-oriented use. So to make parallel port P2 go high, we simply write `HIGH P2`; to make it generate pulses we use the instruction `PULSIN`; to receive data in asynchronous serial form, we use `SERIN`, while to make it output synchronous serial data we use `SHIFTOUT`.
Because of the very simple and explicit syntax of these instructions, anybody can write programs for a Basic Stamp after just a few hours of practice and with no previous knowledge of programming. Moreover, given the seniority and success of the Basic Stamp, the library of programs available is immense. You only have to do a bit of Googling to see for yourself.

So in our opinion, the Basic Stamp is a good choice for someone wanting to make a start in robotics, even if it does present in our view two drawbacks, of unequal importance: it's still expensive compared to other similar ICs; and it doesn't support multitasking. This point must, however, be taken relatively, inasmuch that a number of microcontrollers that do support it are pincompatible with the 24-pin Basic Stamps, allowing easy substitution in the event of your robot's evolving in this direction.

Basic Stamp 'clones'
The success of the Basic Stamp has clearly made some people envious, and various products have tried to imitate it, while seeking to overcome some of its shortcomings. At least two products fall into this category: the Basic Atom 24 from Basic Micro and the PICBasic range from Comfile Technology.

Based on a PIC16F876, the Basic Atom 24, pin-compatible with the 24-pin Basic Stamp 2s, has a program memory the same size as the BS2E.
Faster overall, at around 33,000 instructions per second, it also offers more internal resources, including an ADC, two PWM ports, and up to a point supports interrupts. Its instruction set is also fuller than the 'classic' Basic Stamps, and is related to that of the Basic Stamp 2P, though is a little fuller because of the increased internal resources. So it may represent a worthwhile alternative to the Basic Stamp, especially since it's a little cheaper to buy.

On the downside, we must note all the same that it isn't multitasking either, and its availability leaves something to be desired, as the product has clearly not enjoyed the success its designers were hoping for (or else it just came on the scene too late).
As it is not used a great deal, the library of programs for it is nothing like that of the Basic Stamp.

As for the PICBasic, it is, or rather was, an alternative to the Basic Stamp 2 designed by Korean company Comfile Technology. We

won't talk about it here, as it's clearly on the road to extinction, if we are to believe Comfile's website, in favour of the Cubloc range from this same manufacturer. When you discover in a moment the possibilities of the Cubloc, and given that a CB220 (entry-level Cubloc) costs virtually the same as a PICBasic 2S, you'll easily understand why it's being dropped.

A first steptowards multitasking

Once again, it is Parallax who made the innovation in terms of multitasking with two distinct products for completely different purposes. The first, and also the oldest, is the Javelin Stamp, much less well known than the Basic Stamp. It has to be said that its price (around £ 45) might have something to do with this...

So the Javelin Stamp is physically like a Basic Stamp 2, but is programmed in Java. Of course, it isn't just that which makes it multitasking, but the fact that it has two operating modes: a foreground mode, where it executes the main program written in Java, and a background mode where a certain number of tasks can be performed independently of, and hence at the same time as, the main program.

These tasks are executed by means of virtual peripherals or VPs of which, as far as background mode is concerned, there are five: UART, PWM signal generator, 32-bit timer, 1-bit ADC, and delta-sigma ADC. So, for example, the background generation of PWM signals proves very interesting for robotics applications, since many motors are controlled by signals of this type. So the Javelin Stamp can, for example, control a robot's motors and convert the analogue information coming from a sensor, while still continuing to execute its main program.

Independently of these specific features, the Javelin Stamp uses a Ubicom SX48 processor operating at 25 MHz, giving it a speed of 8,500 instructions per second; its other key characteristics are summarized in **Table 2**, to let you make a quick comparison with the Basic Stamps.

So the partially multitasking character of the Javelin Stamp does make it an interesting pro-

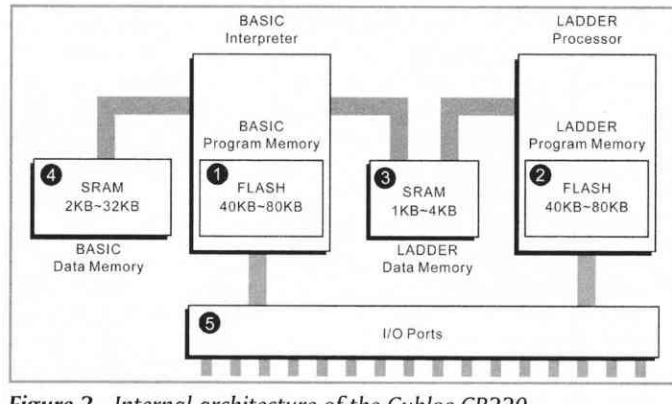

Figure 2 *Internal architecture of the Cubloc CB220.*

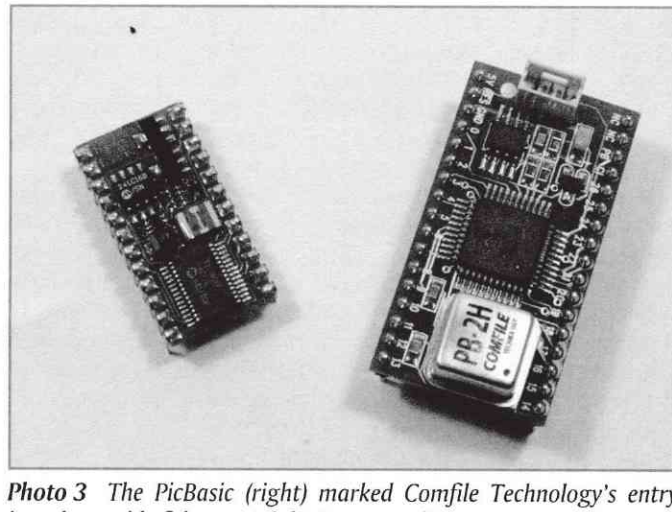

Photo 3 *The PicBasic (right) marked Comfile Technology's entry into the world of these special microcontrollers. It wasn't yet pin-compatible with the Basic Stamp 2 (left).*

cessor for robotics applications, but in our view it suffers from two drawbacks: its excessive price, compared with 'competing' processors; and the fact that it is programmed in Java, which is quite a difficult language to master for anyone who has never done any programming before.

One microcontroller with two heads

The Cubloc range from Comfile Technology is much more innovative in the area of multitasking. As seen in **Figure 2**, showing the Cubloc's internal structure, this microcontroller is in fact a twin one, including on the one hand, a processor programmed in Basic, and on the other, a processor controlled in Ladder. This language, which you may not have heard of, is none other than the language used for programmable automata. The Cubloc's twin processors can of course operate simultaneously, making the Cubloc truly multitasking – provided of course we program in both Basic and Ladder.

To make it easier to get to grips with, it is of course possible to only program it in one language or the other. If you choose Basic, the syntax is close to that of the Basic Stamp with, however, lots of new instructions making it easier to handle PWM signals, or drive an I^2C bus, keyboard interfacing, etc.

Although the Cubloc range currently comprises four main models, whose key characteristics are summarized in Table 3, we recommend starting out with the CB220. Apart from being it's the cheapest of the Cublocs, it's also pin-compatible with the Basic Stamp 2, making it possible todevelop a single-tasking application using the latter into a multitasking application, without needing to make the slightest modification to the electronics.

What's more, given that it's based on an ATmega128 at 18 MHz, it can execute around 36,000 instructions per second and its program memory offers a very comfortable capacity of 80 kB. Note too that it has an 8-channel 10-bit ADC and a 3-channel, 16-bit DAC capable of generating PWM signals.

So the Cubloc CB220 seems to us a good choice today in terms of processors intended for robotics, as it combines lots of advantages in a single package: hardware compatibility with the Basic Stamp 2, the simplicity of Basic programming, and the possibility of multitasking; all this for a price that is still reasonable compared with the other products in this survey.

And finally, some true multitasking

Rest assured, Elektor readers, we have not been paid to write this article by Parallax, even though it's another of this company's products we're going to be talking about next: the Propeller. We have to admit that ever since the first Basic Stamp came out almost 15 years ago, Parallax hasn't been resting on its laurels. But while the previous products were based on existing processors, the Propeller is a real 'chip' developed by Parallax.

As **Figure 3** shows, even at first glance it's an impressive product, consisting of no less than eight independent functional blocks, the

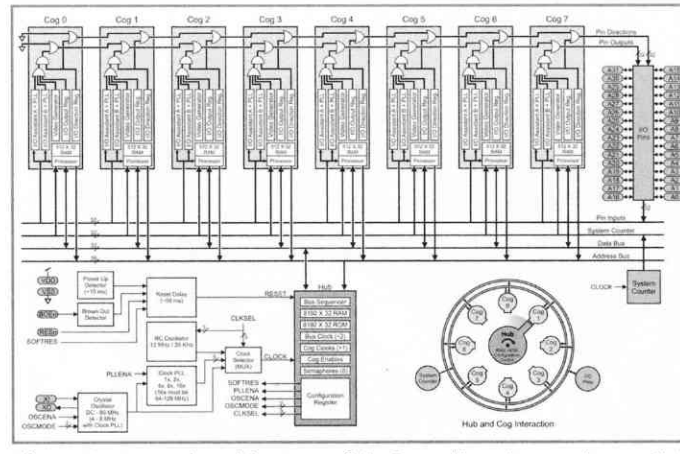

Figure 3 *Internal architecture of the Propeller – impressive, and allowing true multitasking.*

Table 3				
Parameter	**CB220**	**CB280**	**CB290**	**CB405**
Microcontroller	ATmega128	ATmega128	ATmega128	ATmega2560
Clock frequency	18,432 MHz	18,432 MHz	18,432 MHz	18,432 MHz
Program memory	80 K	80 K	80 K	200 K
Dynamic memory (RAM)	2 K (Basic) 1 K (Ladder)	2 K (Basic) 1 K (Ladder)	24 K (Basic) 4 K (Ladder)	51 K (Basic) 4 K (Ladder) 55 K (pile)
Data EEPROM	4 K	4 K	4 K	4 K
Speed (instr./s)	36.000	36.000	36.000	36.000
Inputs/outputs	16	49	91 (33 i/p, 32 o/p, 26 I/O)	64
Serial ports	1 RS232 1 TTL	1 RS232 1 TTL	1 RS232 1 TTL	4 RS232
ADC (10-bit)	8 channel	8 channel	8 channel	16 channel
DAC (16-bit, PWM)	3 channel	6 channel	6 channel	12 channel
External interrupts	–	4	4	4
Fast counters	2 x 32 bits	2 x 32 bits	2 x 32 bits	2 x 32 bits
Real-time clock	–	–	yes	–
Supply voltage	5...12 V	5 V	5 V	5 V
Operating current	40 mA	40 mA	70 mA	50 mA
Package	24-pin DIL (BS2 compatible)	64-pin module	108-pin module	80-pin module

Table 3 *Principal characteristics of the various Cublocs.*

Cogs, each comprising its own processor and some RAM. These Cogs are linked via a bus managed by a Hub that takes care of synchronizing their exchanges. They all share the product's 32 uncommitted input/output lines.

Very few specialized peripherals are built in to the Propeller, but this isn't a problem, given that its programming language, called Spin, is in fact an object-oriented language. So if you need, for example, an RS 232 serial port, you only need to delve into the voluminous object library made available to you by Parallax to find what you're looking for there. You can do the same for generating PWM signals, driving an I2C bus, an LCD display, etc.

Given that there are eight Cogs available, it's possible to run up to eight different applications simultaneously. So a robot fitted with this sort of processor has no difficulty in managing its wheel motors, while analysing the data from several sensors and taking the relevant decisions.

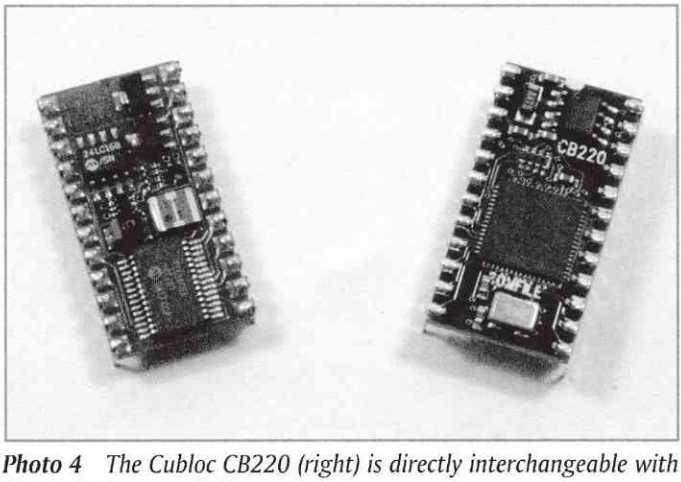

Photo 4 *The Cubloc CB220 (right) is directly interchangeable with the Basic Stamp 2 (left).*

Of course, Spin is a little daunting and writing your first instructions is a bit of a pain for anyone who's never programmed before – but it's well worth all the effort.

What's more, Parallax places at your disposal a forum and above all a space on its website where anyone can

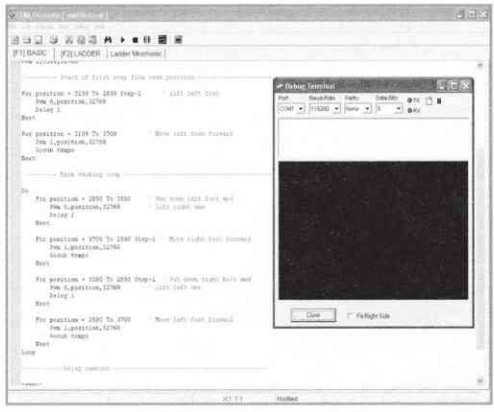

Photo 5 *The development tools for Basic Stamp and Cubloc include a very useful editing terminal.*

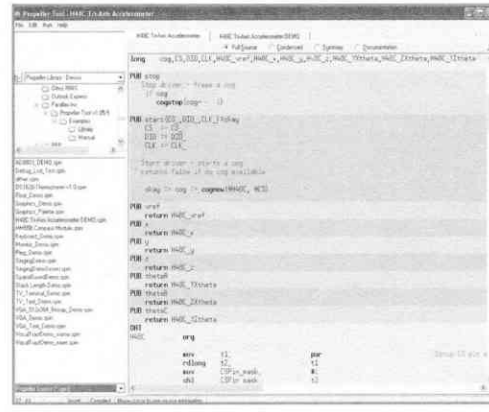

Photo 6 *The Propeller development tool showing an example of Spin – not exactly a barrel of laughs, but the results are worth the effort!*

upload the various object modules they have developed for the Propeller. This participatory library currently has over 75 object modules covering the most diverse fields, and is continually growing.

So if you want to build a robot that requires true multitasking, the Propeller is currently one of the best solutions there is, all the more so because the price is only a quarter of that of a Basic Stamp, a Cubloc CB220, or similar product.

An odd multitasking PIC

We couldn't end this review of special processors for robots without mentioning an IC that's relatively unknown on this side of the world, despite its undeniable interest: the OOPic.
As its name might leads us to suppose, this IC is none other than a PIC microcontroller that can be programmed in object oriented language – 'OO' standing for '**O**bject **O**riented' – but that's not all...

The OOPic is in effect a PIC that you will be able to program in the language of your choice: Basic, C, or even Java – but this program will consist of simple scripts calling up objects.
These objects, currently 130 of them, are capable of managing virtually anything you can imagine driving with a microcontroller, and, rather than list them here, we'll send you off to the OOPic website to discover them for yourselves.

All these objects are able to operate simultaneously and independently of each other as background tasks while the main program is running. So with an OOPic, it's very easy to produce a multitasking application. But the

Adresses

URL	Company	Comments
www.atmel.com	Atmel	Manufacturer of AVR-microcontrollers
www.basicmicro	Basic Micro	Manufacturer of Basic Atom
www.comfile.co.kr/english2/	'PicBasic' website	Manufacturer of PicBasic
www.comfiletech.com	Comfile Technology General Site	Manufaturer of Cubloc
www.microchip.com	Microchip	Manufacturer of PIC microcontrollers
www.oopic.com	Savage Innovations	Manufacturer of OOPic
www.parallax.com	Parallax	Manufacturer of Basic Stamp, Javelin Stamp, Propeller
www.tavernier-c.com	–	Author's website

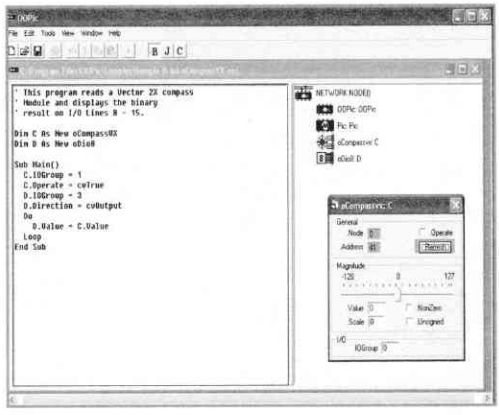

Photo 7 *The OOPic development tool allows graphical interaction with the objects used by the program.*

concept goes further than that. It's possible to link objects together to form what are called virtual circuits that perform complete functions.
In concrete terms, this means that objects can exchange data between them, as a background task, without your main program even having to bother about it.

Another advantage, and not the least, of the OOPic is the possibility of networking it; a maximum of 128 OOPics can be connected together to I^2C ICs, thanks to a 3-wire bus and without any additional external components. So with the OOPic it's possible to create what is called semidistributed robot architecture, i.e. to no longer do multitasking, but multiprocessor operation. One processor looks after the management of the propulsion, another this-or-that type of sensor, and so on, while a 'central' processor now only has to look after decision-making on the basis of the information sent to it.

Of course, implementing such an architecture is no longer within the grasp of a robotics novice, but after starting out with a Basic Stamp or a Cubloc, for example, it is still accessible to anyone who cares to take the trouble, especially since it needs no special investment, since the OOPic is programmed in the language of your choice and the objects are available to you free, and programming is done using a simple cable connected to the parallel port of any PC.

Conclusion

This overview is of necessity incomplete, especially when you think that the programming manual of just one of the ICs presented here runs to at least a hundred or so pages!

But we hope that we have helped you discover or re-discover some of the processors that are particularly well suited to robotics and which, while being simple to implement, do not in any way sacrifice performance.

www.tavernier-c.com (070319-I)

230 Mini Power Inverter

POWER SUPPLIES, BATTERIES AND CHARGERS

Alexander Wiedekind-Klein

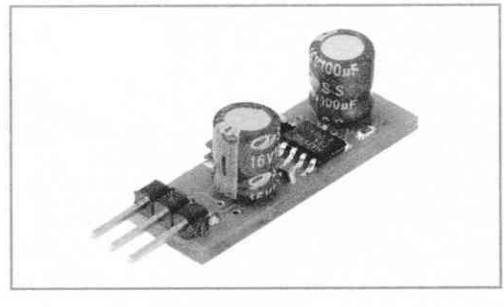

Even robot systems occasionally need a negative supply voltage for some purpose or other, and in this kind of application in particular there is a need for an effective circuit that does not make greater demands then necessary in terms of current or space. If a low-current –5 V supply is needed and only +5 V is available, a natural manufacturer to

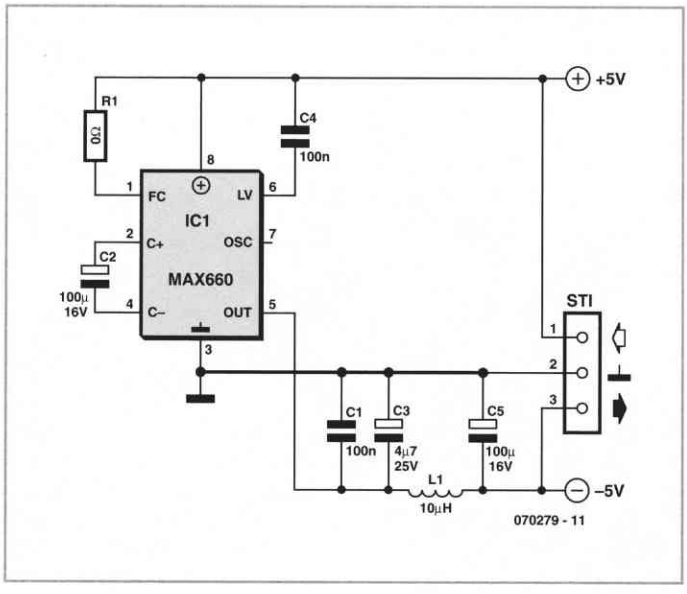

With a 5 V input the output is typically –4.7 V with a load of 100 mA. Efficiency at 10 mA is around 96 % and at 100 mA is around 88 %. With an open-circuit output the IC draws a quiescent current of just 120 μA.

There is little to say about the circuit itself. The 0 Ω resistor on pin 1 selects the operating frequency. With R1 fitted, the circuit operates at 80 kHz; without it, at 10 kHz.
The combination of L1 and C5 slightly reduces ripple on the output voltage; the choice of inductor is not as critical as it would be if it formed part of the switching circuit.

turn to is Maxim, and indeed in this case they do not let us down.

The best-known integrated circuit made by this company is the MAX232, a level shifter for serial ports with an integrated charge pump that does not need an external inductor.
Along the same lines, although with a more stable output voltage and higher efficiency, is the MAX660. The device can 'mirror' any input voltage between 1.5 V and 5.5 V.

Gerber files for the printed circuit board (which uses some SMD components) are available for download from the Elektor website, ref. 070279-11.zip. R1, C1 and C4 are 0603 SMDs and C3 is an SMD tantalum electrolytic capacitor. Either the MAX660CSA or the MAX660M can be used; both come in SO8 packages. L1 is a 10μH SMD inductor rated at 300 mA.

(070279-I)

231 Minimalist Motor

MECHANICS

Abraham Vreugdenhil

The design brief for this robot was that it had to be simple, yet unusual, and also have a specific purpose. But should we really call this a robot? It consists of one motor, one wheel, sensors, a microcontroller, LEDs, batteries and 'legs'. If the motor slowly turns one revolution to the left and then one to the right, and the 'legs' offer more resistance in one direction than the other, the robot will move slightly forward. If it also keeps turning towards the light it becomes a true light seeker.

A detailed description of some of the parts follows.

Wheel

A normal rubber wheel is used for this robot. This gives sufficient grip on the floor, some-

times a bit too much. Particularly in the roll direction, but also perpendicular to the roll direction there is a lot of grip and/or resistance. But any resistance perpendicular to the roll direction will severely restrict the forward movement of the robot.
It would have been better to use an omnidirectional wheel instead. These wheels have smaller wheels/rollers at right angles to the rim, reducing the perpendicular resistance to almost zero. This will work much better than a plain rubber wheel.

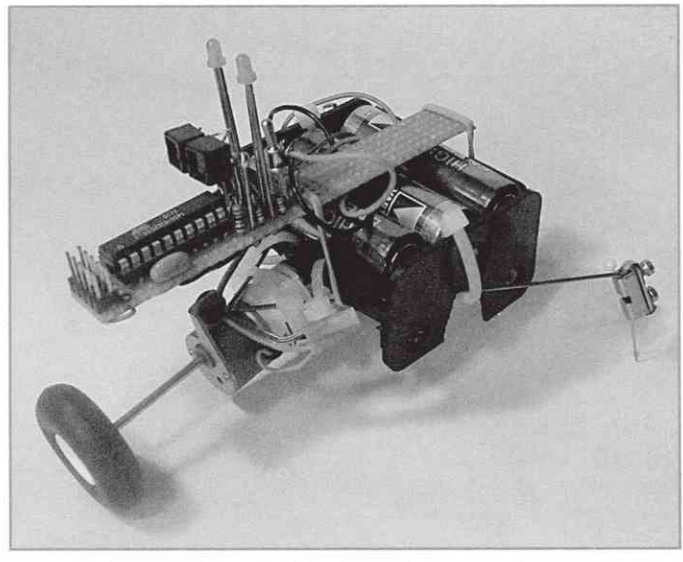

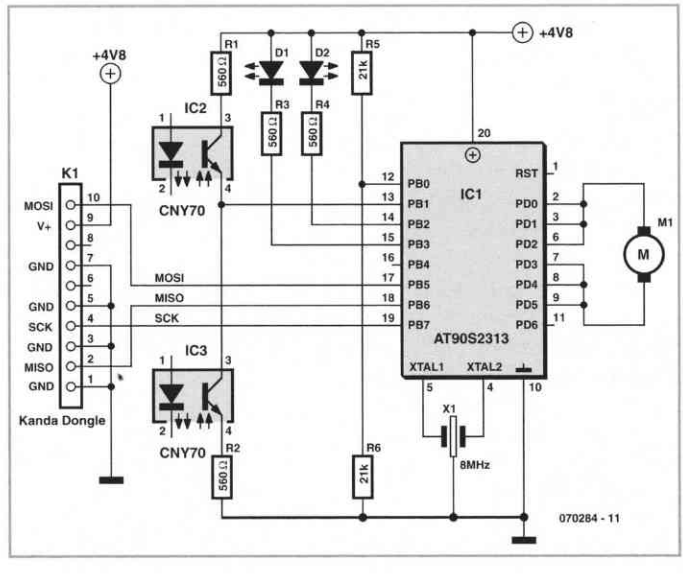

Sensor

For the lights sensors an old favourite is used, the CNY-70. This sensor consists of an IR LED and an IR photo diode and is usually used to detect and track a line on the floor. It is of course also possible to use just the photodiode of this sensor. If we connect two of these in series, with a resistor at each end to limit the current at high brightness levels, we end up with a neat sensor that provides a voltage at the junction of the two sensors that is proportional to the difference in light intensity on the sensors. This junction is connected to one of the inputs of the comparator in the microcontroller. The other input is connected to half the supply voltage, provided by a potential divider formed by two resistors connected to the positive and negative supply. The output signal of the comparator can be read using an internal variable (bit). This way we know at which side of the robot the light is brighter and we can then steer it in that direction.

Microcontroller and motor driver

Most microcontrollers are capable of sourcing a fair amount of current. In this circuit we use this property to directly drive the motor via the microprocessor. When we need to supply larger currents we just connect a few outputs in parallel.

A microcontroller is of course a necessity in every robot. This time our choice was for an AT90S2313. This can be easily programmed

in BASIC with the help of BASCOM- AVR. It has a comparator on-chip, sufficient I/O pins to link together for parallel outputs, etc.

An ISP connection is also made available, so it can be easily re-programmed during testing, or at a later stage if you'd like to try out a different program in the robot.
A pair of 3-mm LEDs is mounted above the eyes for show. The LEDs are connected from the positive supply to the processor via 1 kΩ resistors. To complete the robot circuit there is also a battery holder for four AA cells and an on/off switch.

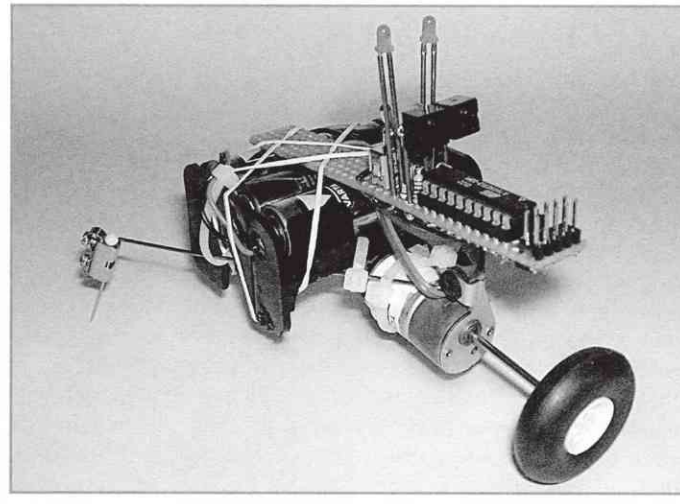

The AT90S software for the Minimalist Motor can be downloaded from the Elektor website.

(070284-I)

232 Trembly

MECHANICS

Abraham Vreugdenhil

The author made this 'construction' for his daughter, who gave it the name 'Trembly' because this robot moves with such a cute trembling motion.

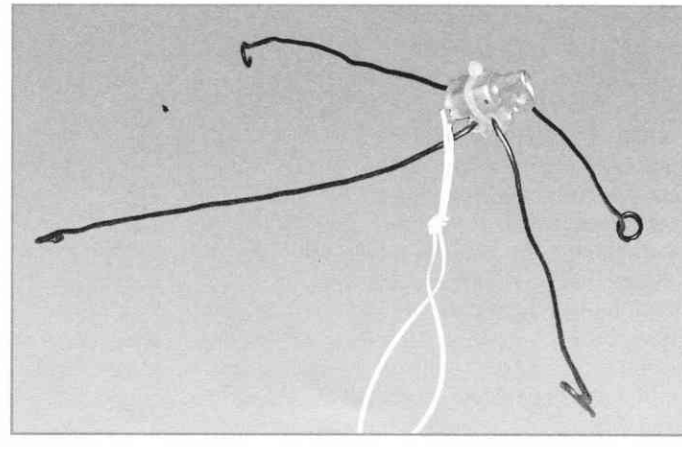

It consists of a little motor fitted with an eccentric weight, a single terminal block, two short legs at the rear and two long legs at the front, all made from electrical wire. The rear legs are fitted with small rubber feet or caps. The motor shaft is aligned to the longitudinal axis of the long front legs. In other words, the direction of vibration of the eccentric weight is toward the short legs. When the motor is switched on, the eccentric weight causes the robot to start vibrating, with the result that it moves forward.
This robot can be built quickly with all sorts of bits and pieces from your junk box, and kids just love it.

(070288-I)

233 Balancing Robot

David den Boer

The most famous balancing robot, also viewed from the general public's perspective, is the Segway, invented by Dean Kamen [5]. This little cart on two wheels is a mode of transport for people, and these days adorns the streets of many large cities. The principle of balancing on two wheels has inspired many robot builders to the construction of such a robot. A few other examples are the NBOT built by D. Anderson [3] and 'Joe le Pendule' built by co-workers at the Polytechnic School in Lausanne [2]. This type of robot comprises a number of sensors and a drive circuit clustered around one or more microcontrollers (**Figure 1**). When building such a robot, a few significant hurdles have to be surmounted. This article will hopefully help with this.

The physics

The principle of a balancing robot is obviously to let the robot move forwards and backwards in such a way that the robot remains upright, the centre of gravity of the robot has to be always directly above the robot. A simple analogy is the balancing of a broom handle on the tip of a finger. This problem is sometimes also known as the 'inverted pendulum problem'. From your physics classes you will no doubt remember that the period of the pendulum is the square root of the quotient of the length and gravity, a longer pendulum therefore has a longer period (see **Equation 1**).

Roughly, it can be deduced from this principle that a balancing robot with a high centre of gravity is more stable and thanks to the longer period is easier to keep balanced. A first simple step in obtaining a good functioning balancing robot is therefore building a robot with a high centre of gravity. This can be done by building a tall robot, but also by the high placement of heavy parts, such as the batteries, or by artificially raising the centre of gravity with additional weights at the top of the robot.

Control

A number of variables need to be known to control the robot. The first variable is obviously the angle of the robot: if the robot is not vertical it will continue to fall over. The speed at which this angle changes (angular velocity) is the second variable that is important. If the robot moves through the balancing point with a certain speed, the angle of the robot at that instant is zero degrees. The robot is not stable however, it is, after all, moving through the balance point with a certain angular velocity. This has to be anticipated by the controller; so this angular velocity is also important when controlling the robot. Finally, the speed of the robot is of importance, since it is the intention to control the position of the robot. By feeding these three variables back to the motors the robot can be controlled into a

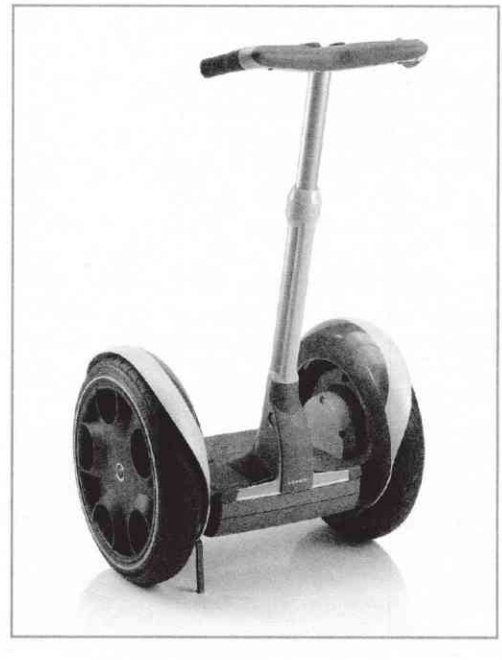

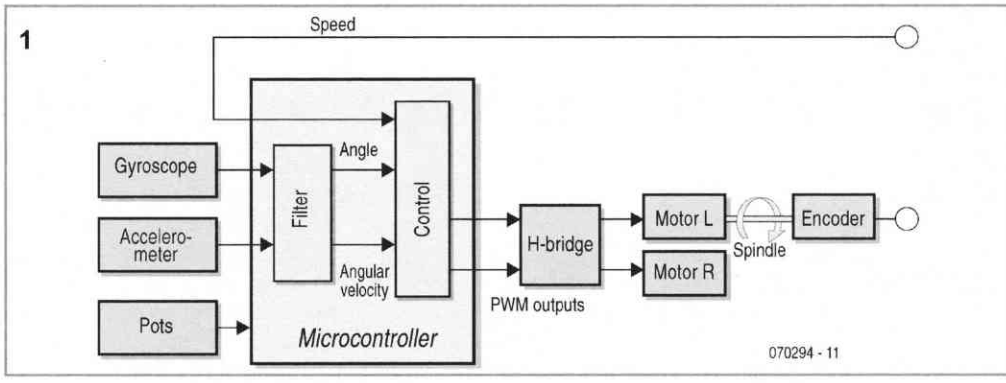

stable position (see **Equation 2**). A mathematical/physical basis of this control strategy can be found in [1], among others, including the derivation of the relevant equations of motion.

Sensors

To determine the aforementioned variables an accelerometer and a gyroscope are usually used.

With an accelerometer the acceleration that the sensor is subject to can be measured. The direction of acceleration is also measured. A sensor that is frequently used is the ADXL202 from Analog Devices, which can measure acceleration in two mutually perpendicular directions. Because the sensor is also sensitive to the static acceleration due to gravity (g), the sensor can also determine the angle of the robot with respect to the Earth.

The acceleration observed by the sensor is shown in **Figure 2** with the vectors *am1* and *am2*. When the sensor is not subjected to any other acceleration, the sensor is only sensitive to the angle of the sensor with the direction of gravity (and gravity itself, which is constant). As soon as the sensor is also subjected to a dynamic acceleration (*a*), the sensor will observe this as well. This is the case, for example, when the robot is driving forwards or backwards. The resulting acceleration *am2* then depends on the dynamic acceleration, gravity and the angle. This gives a direct insight into the problem: the instant that the robot moves, the signal from the sensor cannot be used any more to directly determine the angle of the robot.

Using a gyroscope, the angular velocity of the sensor can be determined. The output signal is directly proportional to the speed at which the sensor rotates around its own axis. By simply integrating this signal the angle of the robot can be calculated. The accuracy is a problem however. If the sensor has a small static offset of, for example, 0.1 °/s per measurement then the error after 100 times of measuring and integrating has increased to 10 °. It is possible to build a balancing robot based solely on a gyroscope, but you will see however that after some time the robot will start to swing and become unstable. The small amount of drift that these sensors have is amplified by the process of integration.

By combining a gyroscope an an accelerometer the disadvantages of both sensors can be compensated for. In general this is done with a so-called Kalman-filter. This sums the result from the gyroscope, the value from the accelerometer and the calculated angle from the previous measurement cycle. These three values when summed are weighted with respect to each other. The weighing factors that are used are determined dynamically while balancing. Because the weighing values tend to quickly converge to a particular value, fixed relationships can also be used (**Equation 3**). The appropriate weighing factors can be determined during the calibration of the system.

It is common practice for the motors in the robot to be fitted with encoders. These give pulses when the motor turns. By counting the number of pulses per unit time or measuring the time between pulses it is possible to de-

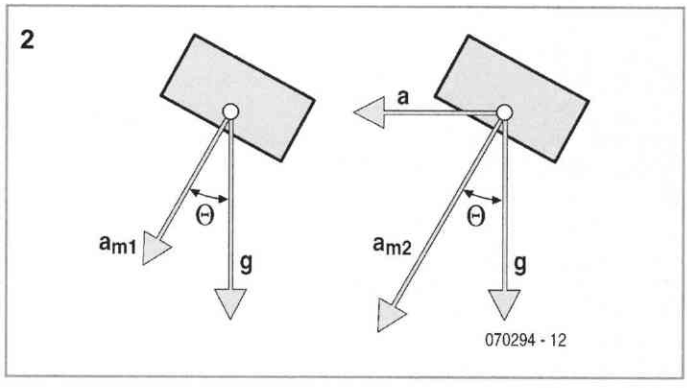

termine the speed of revolution of the wheels and therefore the speed of the robot. Which of these methods gives the highest resolution is determined by the number of pulses that are produced by the encoder for each turn of the wheel.

Actuators

Another special point of interest are the actuators. While balancing the robot the motors have to be frequently switched into the forward and backward direction. However, the combination of motors and gearbox is not without friction or backlash. When the voltage across the motors increases this does not immediately result in power from the actuators, there is a certain amount of offset. This is not a problem in many applications, but in the case of the balancing robot this null point is passed all the time; we are controlling around this null point after all. By compensating for this offset in software when driving the motors the stability of the robot will improve dramatically. Apart from that, the capability of the robot, the nimbleness in staying upright are also determined by the capacities of the motors and batteries. The greater the amount of power that the motors can deliver the better the robot is able to remain upright.

Architecture

In the control loop that is executed by the software in the microcontroller a number of things have to be carried out simultaneously. The sensors have to be read, calculations have to be carried out and the actuators for the robot have to be driven. At the same time it is often also desirable to communicate with

1 $T = 2\pi\sqrt{\frac{l}{g}}$

T	period (s)
g	gravitational acceleratoin (m/s^2)
l	length from pivot to centre of mass (m)

2 $PWM = k_1 \cdot \theta + k_2 \cdot \dot{\theta} + \kappa_3 \cdot v$

θ	angle of the robot (°)
$\dot{\theta}$	velocity at which the angle changes (°/s)
PWM	drive for the motors 0...100%
v	speed of the robot (m/s)
$k_1..k_3$	feedbackfactors (constant)

3 $\theta_B[n] = k_4 \cdot \theta_B[n-1] + k_5 \cdot \dot{\theta}_G[n] + k_6 \cdot \theta_v[n]$

$\dot{\theta}_G[n]$	angular velocity measured by the gyroscope (°/s)
$\theta_B[n]$	angle of the robot, calculated in measurement n (°)
$\theta_v[n]$	angle of the robot, determined by accelerometer in measurement n (°)
$\theta_B[n-1]$	angle of the robot, calculated in measurement n–1 (°)
$k_4..k_6$	constants

a PC for the purpose of data acquisition. For all this it can be a good idea not to use one relatively powerful processor but to use a number of smaller processors which send their data to one central processor. In this way the timing of measuring and controlling can be divided, which make the programming task a great deal easier.

Sum of parts

A balancing robot consists of a number of parts that together have to hold the robot upright: sensors, any filters, a controller and drive system for the robot. Putting all this together in one go is very ambitious, a better chance of success is obtained by first testing and calibrating the individual parts. A good method for this is the temporary addition of a small arm to the robot. This arm is attached to the robot so that it can hinge with the aid of a potentiometer, which functions as the hinge. The other end of this arm is fitted with a wheel that rests on the floor. When the robot loses its balance the position of the potentiometer changes and therefore also its output. The output of the potentiometer has a direct relationship with the angle of the robot and can be used for calibration purposes. Note that it is important to choose a potentiometer with a shaft that turns easily.

The next step is the controller. Because of the arm, a read-out of the angle is available and this can be used to test and calibrate the controller for the robot. As already mentioned, feedback from the angle of the robot, angular velocity and speed of the robot are essential for the successful control of the robot. It is possible to calculate the necessary feedback factors mathematically. However this makes a complete and detailed physical description of the robot and the behaviour of the motors essential. It is simpler to determine these factors experimentally. This can be done, for example, by connecting a number of digital or analogue potentiometers to the microcontroller. The program that runs in the microcontroller reads the position of the potentiometers and converts the relevant values into feedback values. The calibration can now be done with a lot of patience. A first step is to increase the feedback factor for the angle. If this factor is too small then the robot will react slowly; if this is too large then the robot will quickly oscillate around the balance point. In the latter case the feedback factor can be reduced and the feedback factor for speed can be increased. In this way the robot will quickly gain in stability. A final step can be made by increasing the feedback for speed. This will result in better positioning for the robot. A feedback factor that is too large however will make the robot very unstable.

A second step is the calibration of the sensors. The measurement values from the sensors (gyroscope, accelerometer) can be read into a PC via the microcontroller. Sensors that provide a read-out in the form of a pulse width modulated signal are quite common. By comparing the measured pulse width with the reading from the potentiometer that is mounted to the arm the angle and angular velocity can be easily derived. During the calibration, the drive for the robot can be switched off. By moving the robot back and forth by hand the angle and angular speed are changed and the calibration can be performed. When calibrating the accelerometer it is important to move the robot back and

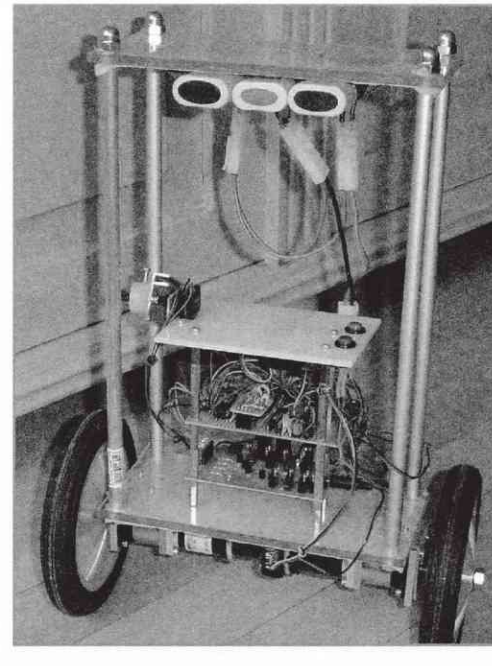

Web Links

[1] *http://robotics.ee.uwa.edu.au/theses/2003-Balance-Ooi.pdf*
This document describes a final year project during which a balancing robot was built. The research is quite detailed with respect to the physical and mathematical modelling of the problem.
[2] *http://leiwww.epfl.ch/joe/*
Polytechnic school of Lausanne. The website is in French but there are a number of nice movies.
[3] *www.geology.smu.edu/~dpawww/robo/nbot/*
This is the website of D. Anderson who built the NBOT.
[4] *www.dena.demon.nl*
Dutch website on the construction of a balancing robot.
[5] *www.segway.com*
Importer of the Segway.
[6] *www.sparkfun.com*

forth very slowly, so that the dynamic acceleration is as small as possible and only the acceleration due to gravity is observed.
A third step is the calculation of the angle and angular velocity: the results from the sensors have to be combined in such a way that the angle of the robot and the speed at which this angle changes is obtained. The calculation that makes this possible has been described above. The weighing factors can be determined by moving the robot for some time (1 minute, for example) and reading the values from the sensors (accelerometer, gyroscope and potentiometer on the arm). A spreadsheet on the PC can subsequently be used to analyse the values and determine the correct values for the weighing factors.

(070294-I)

234 A Robot with an Elephant's Memory

MISCELLANEOUS ELECTRONICS AND DESIGN IDEAS

B. Broussas

Although 'just for fun' robotic applications can usually make do with the few bytes to few hundred bytes of Flash memory that's available in most current microcontrollers, certain more 'serious' or more complex applications do need much greater memory capacities. A mobile robot may hold in its memory a complete mapping of an area in the form of coordinates like those provided by a GPS, for example. Alternatively, it may be required to collect a large quantity of data furnished by its sensors.

Faced with such a situation, it is of course possible to produce one or more special memory cards using the high-capacity Flash EEPROM packages available on the market today. However, this approach fairly soon comes up against numerous problems. The first is making the necessary PCBs. Most memories of this type are only available in SMD packages, and their close pin spacing makes producing a PCB a tricky job for amateurs, not to mention the difficulty you then have soldering such ICs correctly. The second problem is that as these memories are intended above all for the professional market, they're sometimes very difficult for amateurs to get hold of.
So in this article we're proposing an original solution to this problem, provided your robot is fitted with at least one PIC microcontroller and you don't mind programming it in Basic. You'll agree these are relatively minor constraints, especially when you think that by doing it this way you'll be able to give your robot a gigabyte or even more of memory for just a few tens of pounds!
The memory we've adopted is quite simply the memory sold in the form of SD cards (Secure Digital), originally intended for digital cameras and portable music devices. This

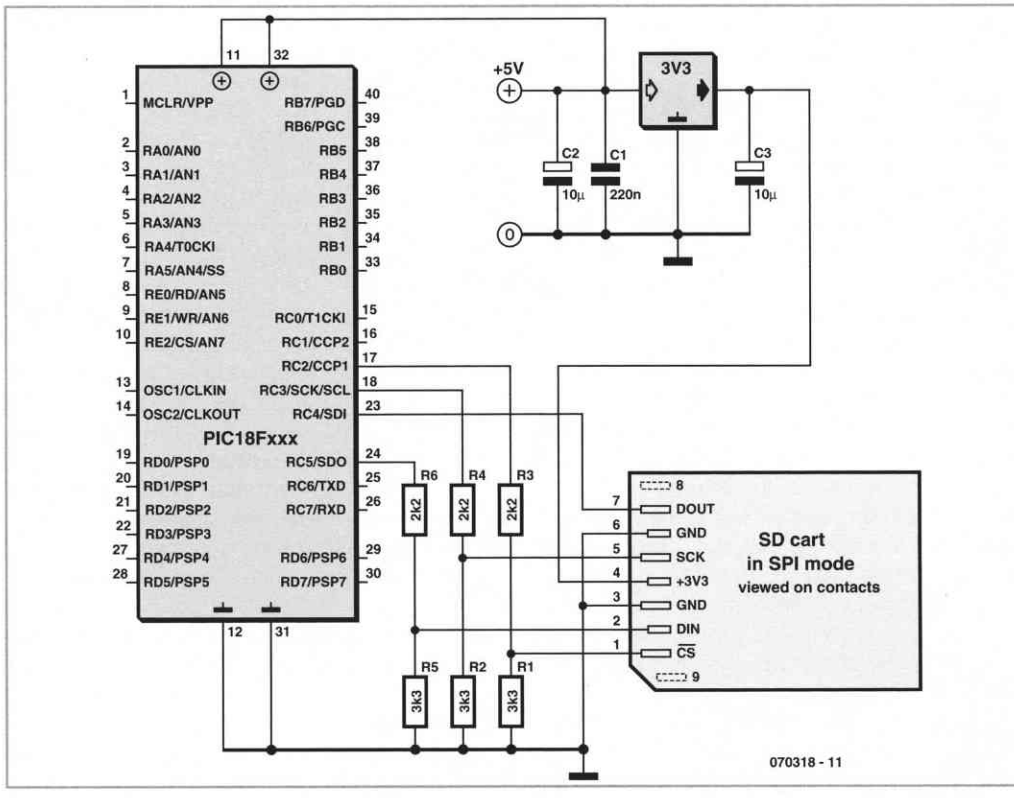

memory is very inexpensive today (around £ 7 for 1 GB at the time of writing), very compact, and unwaveringly reliable, provided you do not exceed the maximum number of write cycles, which is however hundreds of thousands, or even millions, depending on how optimistic the manufacturers are...

The hardware interfacing of such memory with a PIC microcontroller is relatively easy, as the SD-type memories' mode of operation is compatible with the SPI-type synchronous serial interface available in these microcontrollers. The only thing to watch out for is the electrical levels, as these memory cards work on 3.3 V while the PICs in our robots are most often powered from 5 V. The figure suggests a circuit that can be used with all PIC microcontrollers in the PIC18 family from Microchip.

However, the problem is noticeably trickier when it comes to the software for managing these memory cards. Contrary to what we might at first think, these are not just simple EEPROM Flash memories with serial access, but modules that have their own internal intelligence. So it's not possible to read or write directly to these memories as you would do with an ordinary serial access EEPROM like a 24C16, for example.

The dialogue has to respect a precise protocol, as the card only recognizes and responds to a certain number of commands. We also have access to various internal registers with quite specific purposes. Lastly, the location of the data in the card is not just 'any old how', but follows a principle similar to that found on diskettes and hard disks, using in particular a FAT (File Allocation Table) that shows where the data, contained in files as a result, are stored.

Even though it is possible to manage all this information by writing the necessary subrou-

tines yourself in machine language, this is a long, tedious, and error-prone task.

Very fortunately, if you're interested in using such a memory card in your robot, there is one Basic compiler (for PIC microcontrollers only, at the time of writing) that has a full management library available for SD-type memory cards wired as shown in our figure. This is the MikroBasic compiler from Mikroelektronika, which you can find on the publisher's website (*www.mikroelectronika.co.yu*), with a working demo version allowing you to try it out before buying. Apart from those standard functions available in all Basic compilers for PICs worthy of the name on the market today, it has a full management library for SD-type memory cards (also for Compact Flash types, but they're not the subject of this article).

We're not going to detail here the sixteen instructions available for manipulating SD cards, especially since you can download the manual for this compiler free of charge from the publisher's website. Just be aware that using this product makes the management of such cards ever so much easier, to say the very least!
So for example, if you have filled a buffer and want to now store it onto the SD card, all you have to do is write:

```
status = Mmc _ Write _ Sector
(number, buffer)
```

where:

- `status` is a variable containing a numeric code returned by the command indicating the outcome of its execution (0 for successful, 1 for an error sending the command, 2 for an error during the writing proper).
- `number` is the number of the SD memory sector we want to write to (we explained above that the data storage is similar to that on a hard disk, and now you can see this in practice).
- `buffer` is the label marking the start of a buffer able to hold up to 512 bytes, which is the size of the SD card sectors.

Reading the information stored on the SD card and transferring it to the robot processor's RAM is just as simple, and amounts to a single line of code:

```
status = Mmc _ Read _ Sector
(number, buffer)
```

where:

- `status` is a variable containing a numeric code indicating the outcome of the execution of the command (0 for success, 1 for failure).
- `number` is the number of the SD memory sector we want to read.
- `buffer` is the label marking the start of a buffer whose size must be at least 512 bytes; this buffer is going to receive the data read from the selected sector on the card.

As you will note, it would be difficult for things to be much easier, even though in this article, by nature only a summary, we have not said anything about the card's FAT management instructions. However, the latter are much less frequently used, once the structure of the card is defined, and a detailed, annotated example about these is given in the compiler manual.

So then, if your robot needs lots of memory, lend it the SD card out of your camera and pay a visit to Mikroelektronika (*www.mikroelektronika.co.yu*).

(070318-I)

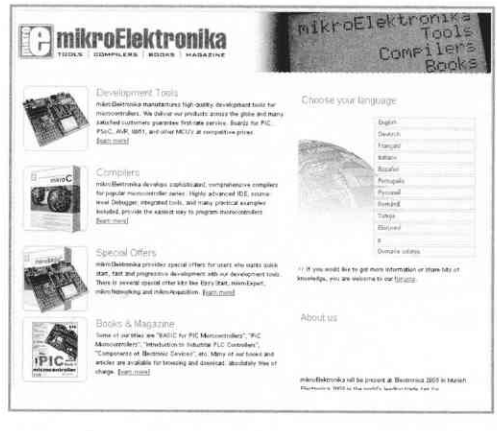

235 An Obstacle Detecting Robot

SENSORS

C. Tavernier

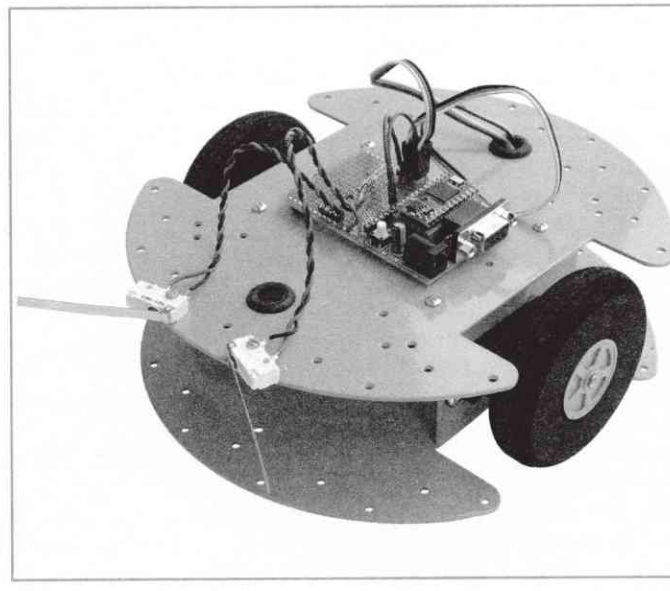

When first trying our hand at robotics, we're generally in a hurry to build a mobile robot that has a degree of autonomy. It's with this aim in mind that we've produced this article, to enable you, in record time, to build a mobile robot capable of detecting and avoiding obstacles. Of course, given the relative simplicity of the solutions employed, it will be fairly easy to catch it out, but as long as you take a little care over the obstacles it might encounter, it'll still create quite an impression. And you'll be able to use this starting point as a springboard for your own developments.

To deal with the mechanical issues that often pose problems for many amateur robot-builders, we're making use of a 'Rogue Blue' base, sold as a kit and very easy to assemble without special tools. What's more, this kit is distributed in France by Lextronic (*www.lextronic.fr*), who can despatch to any of the neighbouring countries.

As you can see from the photo, it consists of two pre-cut circular plates able to accommodate two radio-control servos, used as traction motors. Supplied with the base, these come already modified (as explained elsewhere in this book) to enable them to turn continuously. Two wheels with large-diameter tyres are also provided, fixing directly

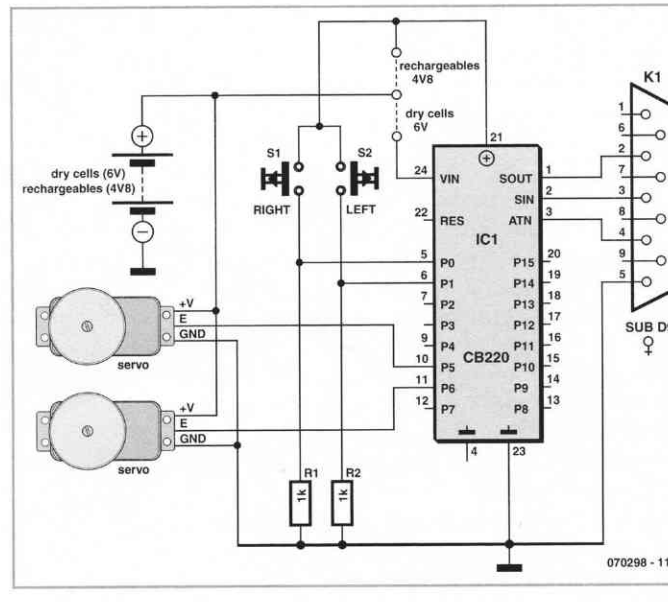

onto the servo shafts, while the front and rear of the robot's lower plate have PTFE 'skids' taking the place of a jockey wheel.

Some self-adhesive Velcro lets us secure a battery holder for primary cells or rechargeables between the two circular plates, leaving the whole of the top plate free for the electronics. Given the supply voltage for the servos and the electronics, we have used a 4-cell battery holder that takes four 1.5 V AA (R6) cells, and will also take rechargeable NiMH batteries of the same size, in the event of intensive use.

So as to get our robot up and running quickly, we've used a 'whisker'-type obstacle detector. To achieve this, we use two long-lever microswitches – or two ordinary lever-operated microswitches with a few centimetres of piano wire soldered to them – mounted on the top plate. They are positioned at an angle of around 45–60° to each other, with their centrelines intersecting on the robot's front/back centreline. This gives us one obstacle detector on the front right, and another on the front left.

The robot's brain is entrusted to a Cubloc CB220 module from Comfile Technology, allowing us to both write a very simple program and build an equally simple electronic circuit, as you can see from the diagram.

Full source listing for the obstacle-detecting robot management program

```
' Obstacle avoider robot on a Rogue Blue base

Const Device = CB220

Dim Obstacle As Byte

Input 0      ' Right whisker input
Input 1      ' Left whisker input
Low 5        ' P5 output for PWM
Low 6        ' P6 output for PWM
Delay 1000

Do
If In(0)=1 Or In(1)=1 Then      ' Whisker activated?
Pwm 1,3410,32768                ' Servos stopped
Pwm 0,3410,32768
Pause 800
If In(0) = 1 Then               ' Right whisker?
Obstacle = 1
Else
Obstacle = 2                    ' Left whisker!
End If

If In(0) = 1 And In(1)= 1 Then  ' Right and left
                                  whiskers?
Obstacle = 3
End If
Pwm 1,3590,32768                ' Backward
Pwm 0,3195,32768
Pause 1500
Else
Obstacle = 0                    ' No whisker activated
End If

' Obstacle variable analysis

Select Case Obstacle
Case 0                          ' No obstacle
Pwm 0,3590,32768                ' Forward
Pwm 1,3195,32768
Case 1                  ' Obstacle on the right side
Pwm 0,3600,32768        ' Light turn to the left
Pwm 1,3600,32768
Pause 1000
Case 2                  ' Obstacle on the left side
Pwm 1,3180,32768        ' Light turn to the right
Pwm 0,3180,32768
Pause 1000
Case 3                  ' Head-on obstacle
Pwm 0,3750,32768        ' Full half turn
Pwm 1,3750,32768
Pause 1500
End Select
Loop
```

Ports P0 and P1 of the Cubloc are programmed as inputs and receive the information coming from the obstacle detectors. Normally low, they go high when one or other of the whiskers is activated, i.e., in the presence of an obstacle.

Ports P5 and P6 are programmed as outputs and drive the propulsion servos. The choice of these ports is vital, as the Cubloc's PWM signal-generating instruction we are going to be using only works with these. The servos are powered directly from the pack of four 1.5 V cells, while we use the Cubloc's VIN input so as to take advantage of its built-in 5 V regulator. However, if you are going to use NiMH rechargeables instead of primary cells, you'll have to use the VDD input to power the Cubloc, as in this case the voltage available is only 4.8 V.

Connector DB9 is designed for connecting the Cubloc to a PC, to program it with the software we'll be suggesting in a moment. Given the simplicity of the circuit, it can be built on perforated prototyping board or on a CB220-Proto test board, which comes with this connector already pre-wired.

The software needed to control the whole thing is very simple, even for someone with only faint notions about programming. The Cubloc's Basic language is both simple and very powerful. The source listing is available on the Elektor website, as well as the author's own site (but it's so short, you can also just type it yourself directly into the Cubloc Studio editor, which is the Cubloc's (free) development tool, and can be downloaded from www.comfiletech.com.

The listing is very easy to analyse. After defining the type of Cubloc in use and the operating sense of the ports P0, P1, P5, and P6, we also define a variable 'obstacle'. The main program can then commence, in the form of a continuous Do Loop.

We start by testing for one or other of ports P0 or P1 going high, and if this is the case, the robot is stopped by means of the two PWM instructions that follow. Given that we are using modified radiocontrol servos, remember they are stopped when they receive pulses of 1.5 ms; they rotate at full speed in one direction for 2 ms pulses; and at full speed in the other direction for 1 ms pulses.

Note too that, as the servos are mounted in reversed orientations in the Rogue Blue base, they need to rotate in opposite directions to make the robot go forwards or backwards. Because of the mechanical and electrical tolerances, 1.5 ms pulses don't always give exactly stop. So you may need to go back and tweak the first parameter of the PWM instructions (3410 in this example).

Once the robot has stopped, we test to see if the left or right whisker has been activated, and set the variable 'obstacle' accordingly. One last test checks if both whiskers have been activated simultaneously, and if this is the case – meaning the robot has encountered an obstacle directly ahead – reverse drive is applied (2 ms pulses to one servo and 1 ms to the other).

The variable 'obstacle' is then analysed by means of a 'select' box that the Cubloc's powerful Basic has borrowed from C. If the variable 'obstacle' has a value of 0, no obstacle has been encountered and our robot sets off forwards. If the variable 'obstacle' has a value of 1 or 2, an obstacle has been encountered to right or left, and so a quarter-turn is made in the opposite direction. However, if the variable 'obstacle' has the value 3, an obstacle directly ahead has been encountered, and the robot does a complete U-turn.

Watch out! Depending on what you call front/back and left/right on your particular robot, you may need to swap round the successive PWM instructions in the listing we've just given, so that they do indeed produce the movements intended.
You might also need to tweak the first parameter of the various PWM instructions. We explained the reason for this above for stop, but the same thing happens for rotation of the servos at full speed in one direction or the

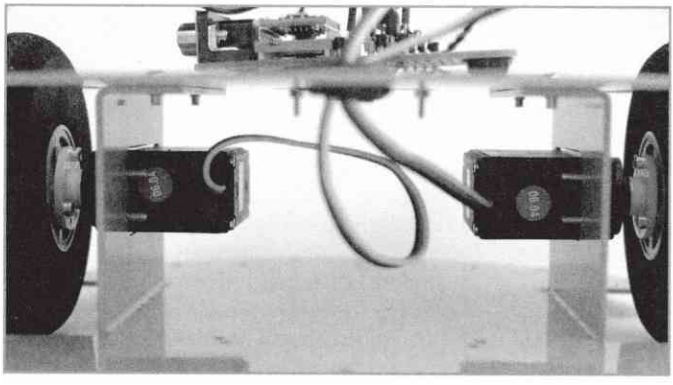

other. If your robot fails to travel in a straight line when running forwards or backwards, it's just because the servos are not turning at the same speed for pulses of the same width. In this case, all you have to do is make minor adjustments to the first parameter of one or the other of the PWM instructions in order to get correct results. Don't be afraid to, the Cubloc's program memory is virtually infinitely reprogrammable (a minimum of 10,000 cycles guaranteed by the manufacturer of the microcontroller it's fitted with!)

After a certain period of use, you'll doubtless realize the limitations of this robot. Then it's up to you to develop it, by adding, for example, obstacle detectors of the same type, but to the rear, an ultrasonic distant obstacle detector, a line-follower function, etc. The articles in this book already ought to give you some good ideas to get you started.

(070298-I)

Web Link
Rogue Blue base kit:
www.roguerobotics.com

236 PIC Indicator Relay

ACTUATORS

Herbert Musser

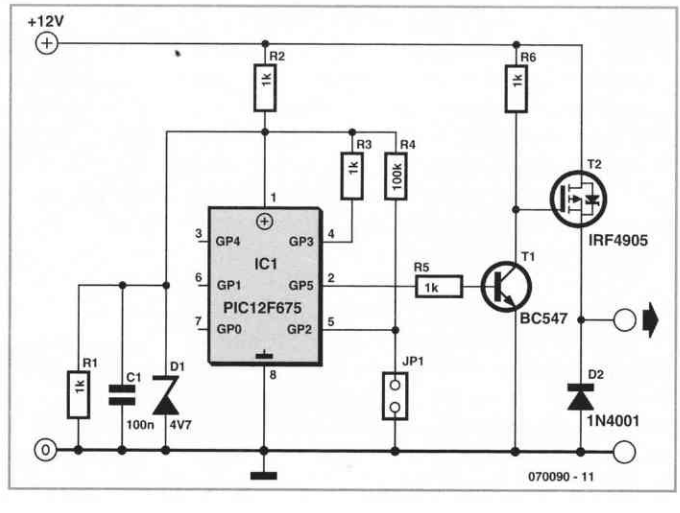

Members of the motorcycling fraternity will welcome this design. Some types of motor cycle are notorious for having very short life expectancy of their filament indicator lamps.

Vibrations transmitted through the frame are the culprit (especially if the indicators are mounted on the ends of long stalks). After-sales replacement LED lighting clusters are far more reliable but they create another problem: they draw less current than the filament lamp and cause the indicator relay to switch the indicators on and off far too quickly.

The first attempt to solve the problem with an analogue electronic flasher circuit was not successful: the first charge cycle of a capacitor was almost twice as long as successive periods, so the flash rate was not constant (maybe an integrator circuit would have given better results).

A better solution was produced using the mini PIC circuit and FET shown here. This design also has a built-in bonus feature; motorcyclists are notorious for forgetting to cancel their indicators so the circuit includes a time-out function (jumper selectable) which automatically cancels the indicator after 120 blink cycles.
The circuit uses very few components and the finished circuit can usually be fitted into the existing indicator relay housing with a space of around 20 mm × 30 mm.
The output signal from the PIC controls the driver (T1) which then switches the HEXFET power transistor (T2). The IRF4905 has an extremely low on-resistance of just 20 mΩ and is capable of switching 74 A maximum. The supply (derived from indicator relay) is limited to 4.7 V by diode D1 and smoothed by C1 to reduce the effects of any interference from the motorcycle supply.

Firmware for this design applicable to the PIC controllers 12F629, 12F683 and 12F675 is available to download free of charge from the Elektor website, look for file number 070090-11.zip.

The finished circuit is reliable, impervious to vibrations, load current changes and best of all can be built for less than 7 pounds (approx. 10 euros). As a final thought you should check that traffic regulations allow the use of such home-made designs to be fitted to the motorcycle before it is driven on the road.

(070090-I)

237 Propeller Prototyping Board for BoeBot

MICROCONTROLLERS

The Propeller chip made by Parallax Inc. is a bit of a strange animal in the world of microcontrollers. This IC consists of eight 32-bit processor cores that are given access one by one to the peripherals and processor memory. This makes the Propeller extremely fast and it can work without the use of an interrupt mechanism: tasks that used to require an interrupt routine can now be run in their own processor core (called a 'COG' in Propeller-speak).
This processor is fast enough to directly drive a VGA monitor for example, and also perform other tasks at the same time as well. We don't have enough space here to go into detail of the operation and the software for the Propeller.
All this information and documentation, example applications and extensive development software can be freely downloaded from the Parallax website.

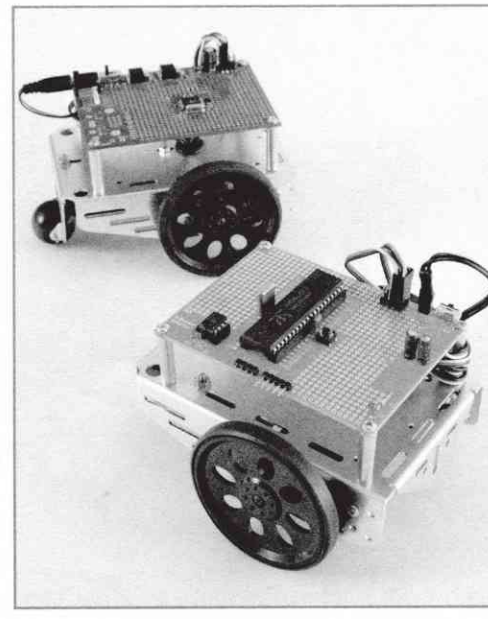

BoeBot

As you may know, Parallax is also the manufacturer of the BoeBot robot kit, a frame with all the required hardware to make a mobile robot that can be equipped with various sensors. All this is controlled by a processor board using a Basic Stamp or Javelin Stamp.

The BoeBot with the Basic Stamp was previously covered extensively in a series of articles in *Elektor Electronics*, but that was quite some time ago: end 1999/early 2000 to be exact.

But it's still going strong after all this time, since the BoeBot is even now widely used in education. That was the original purpose of this robot, since 'Boe' stands for 'Board of Education'.

Upgrade

It was only a matter of time before this robot was upgraded with a processor board for the Propeller chip. Parallax has recently brought out a prototyping board that is made to measure for the BoeBot frame. It is noticeable that part of this board now has an ordinary prototyping area for the addition of extra electronics, whereas the 'old' Basic Stamp board came equipped with a mini breadboard.

On the Propeller board we therefore have to solder any extra components, which is a bit more time consuming than simply inserting them into a breadboard, but it does make the robot more reliable. Despite being carefully constructed and having well thought out software a robot can still bump into something or

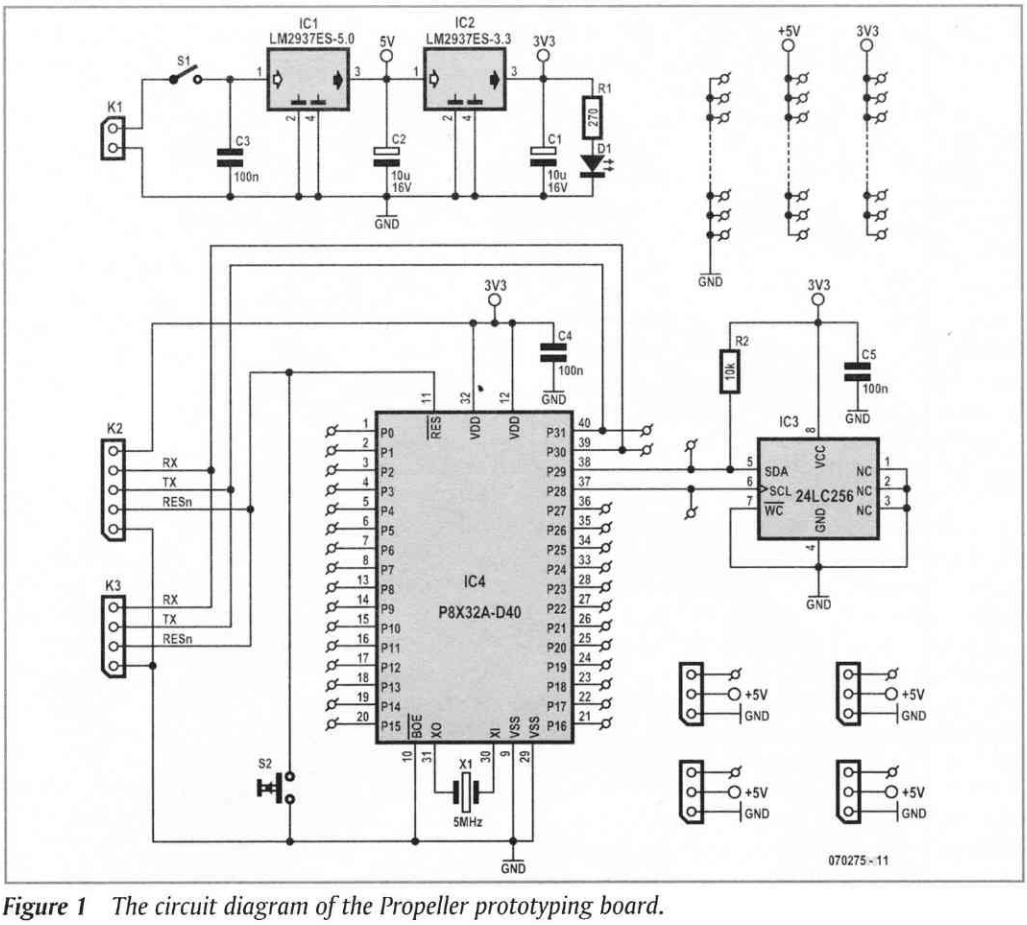

Figure 1 *The circuit diagram of the Propeller prototyping board.*

become a victim of a passing pet who suddenly discovers a new playmate.

When a breadboard is used, some components could become dislodged; with a prototyping board the chances of survival are greater.

The prototyping board is well laid out, has everything you need and is reasonably priced, but we did see a potential disadvantage (especially in education): both the processor as well as the EEPROM are SMD versions.

If something is wrongly connected it could mean the end of the processor and in many cases also the end of the board. Not everybody will have the right soldering equipment to replace such parts.

Parallax had no objections when we asked if we could design a version of the board for use with classic DIL ICs. Should something go wrong with one of the ICs on this board it's just a question of simply placing a new chip into a socket (after first finding out what caused the problems, of course!).

These components obviously take up more room of the Boe-Bot frame than their surface mount counterparts.
The DIL version of the processor in particular is much larger than its little brother in a LQFP package. Because of this we have left out a few features that were present on the Parallax board, such as the combined VGA, keyboard and mouse connector, since we felt that they're unlikely to be missed in a mobile robot.

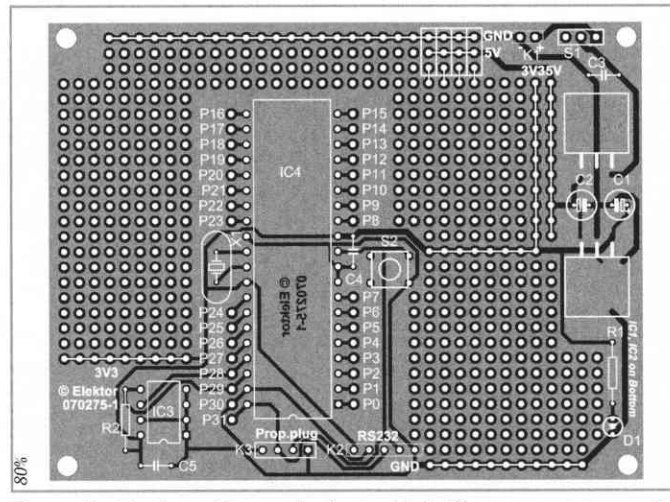

Figure 2 The board layout is single-sided. If you expect to use the prototyping area a lot then a double-sided through-hole plated version would be preferable.

Components list

Resistors
R1 = 270 Ω
R2 = 10 kΩ

Capacitors
C1, C2 = 10 μF 16V radial
C3, C4, C5 = 100 nF

Semiconductors
IC1 = LM2937ES-5.0
IC2 = LM2937ES-3.3
IC3 = 24LC256
IC4 = Propeller chip
P8X32A-D40 (Parallax)

Miscelllaneous
X1 = 5MHz quartz crystal
K2 = 5-way SIL pinheader
K3 = 4-way SIL pinheader
S1 = on/off switch
S2 = 1 make contact
4 pcs 3-way SIL pinheader
PCB, order code 070275-1
from Elektor Shop

Circuit diagram

The circuit diagram (shown in **Figure 1**) is conspicuous by its simplicity. Two low dropout voltage regulators provide 3.3 V for the processor and the EEPROM, and 5 V for peripheral devices that require a higher voltage, such as the modified servo motors that propel the BoeBot.

Remember that the input pins of the Propeller can't withstand 5 V. Next to S1, the power switch, is a group of four three-pole SIL connectors for the connection of servos and other peripherals that require a 5 V supply.

A power source with a voltage between 5.5 V to 26 V should be connected to K1, but we could advise against using too high a voltage because of the heat dissipation in IC1.
There are two different ways of implementing the programming interface to a PC: K3 is the connector for use with the Propeller Plug by Parallax, which uses a USB link. K2 is used for the simple serial interface that is described elsewhere in this issue. D1 indicates that the supply voltage is present, and S2 is the reset switch.



Figure 3 This message confirms that the Propeller Tool has made a connection and the fun can begin!

Practical side
The PCB is also very straightforward (see **Figure 2**). We have intentionally chosen a single-sided layout because this makes it easier to etch it yourself. Both voltage regulators are soldered on the bottom of the board.

IC3 isn't strictly required to start using the Propeller. When the processor starts it runs its bootloader routine, which first checks if there is a communications link to the host PC and then waits for a program to be downloaded. The user then has the choice of either loading the program into the internal program memory of the Propeller or into the external EEPROM.

If no communications with a PC are possible, the bootloader will attempt to load a program from the EEPROM; if nothing is found there either, the bootloader stops and the processor turns itself off automatically.
A program can be directly transferred from the PC into the internal program memory and then executed, but remember that this memory is volatile. When the power is turned off, all memory contents are lost.

The crystal can be left out as well, since the Propeller initially uses its internal RC oscillator that runs at a speed of 12 MHz, which is fast enough for most applications. X1 will only be used once the program has set the relevant clock registers.

Once power is applied to the processor and the circuit is connected to the PC, the 'Propeller Tool' should be started and the F7 key pressed (or from the Run menu choose the Identify Hardware option). The serial ports of the PC are then scanned one by one for the presence of a connection to the Propeller board and if everything is in order a message will appear like the one shown in Figure 3. The COM port number will obviously depend on which port the interface is connected to.
Once this message has appeared we can get to work with the Propeller and explore the exiting world of this microcontroller.

(070275-I)

Web Link
www.parallax.com/propeller

238 Voltage Stabiliser

Alexander Wiedekind-Klein

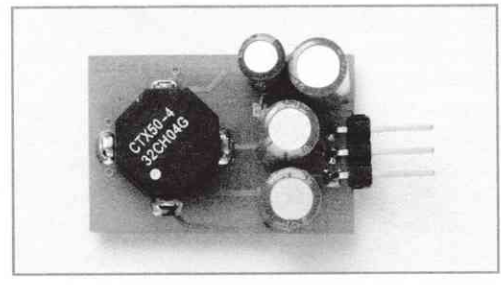

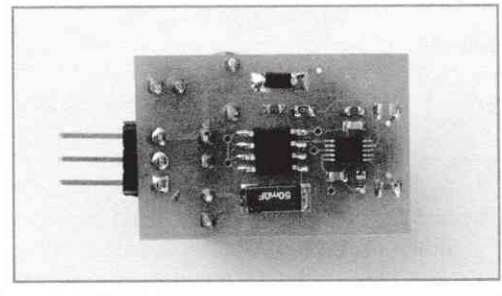

Electric motors used in robot applications often make sudden and heavy demands on their power supply. Although the batteries normally used have a low internal resistance, they nevertheless sometimes have difficulty maintaining their output under load and can be damaged by current spikes. Not all the electronics in the robot can cope with these effects, the voltage regulation provided by ordinary threeterminal devices not always being up to the job. This electronic voltage stabiliser is a solution to that problem.

The circuit is based around a compact switching regulator which is capable of producing a steady DC voltage of 12 V at its output over input variations from 13 V to 25 V, at loads of up to 750 mA. Its three-pin form factor makes

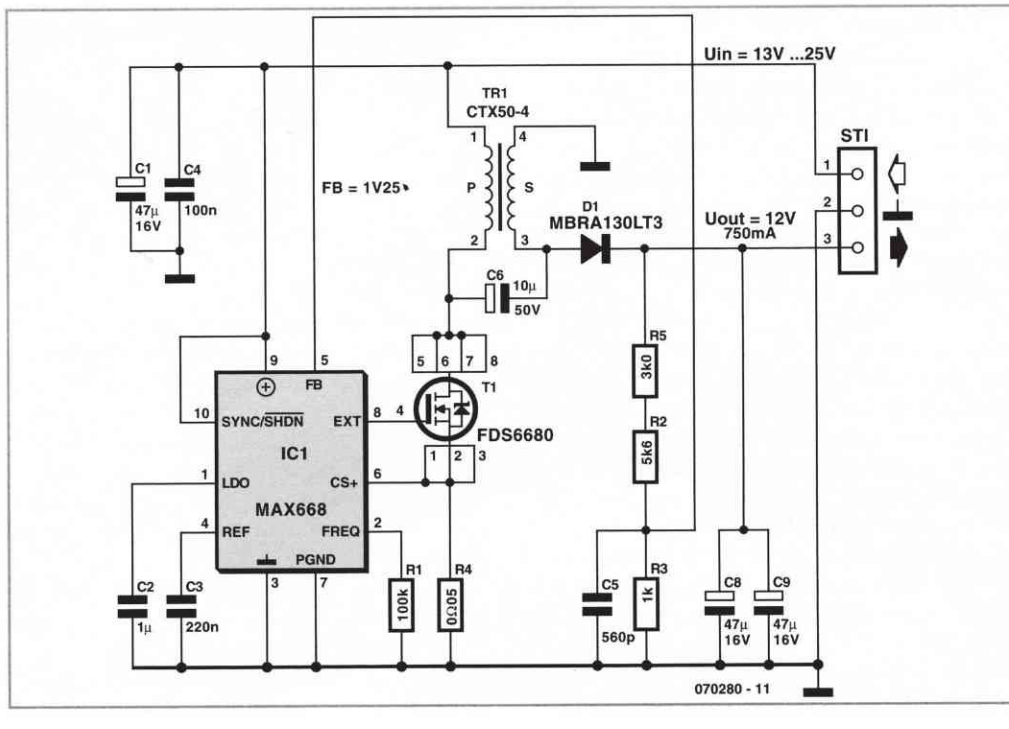

it a simple replacement for conventional three-terminal voltage regulator ICs. The buck-boost switching circuit uses an SMD power FET for T2, and to achieve high efficiency (approximately 90 %) a Schottky switching diode for D1. The most specialised component is the miniature transformer designed for use in this type of supply. For the prototype we used a Coiltronics CTX50-4.
The current limit is set by R4. The output voltage is scaled by the voltage divider formed by R3 and the series combination of R5 and R2. The output voltage is controlled so that a voltage of 1.25 V appears across R3 and hence on the feedback input (pin 5) of IC1. The circuit can be modified for different output voltages by changing the component values in the voltage divider. For lower output voltages the input voltage can also be reduced correspondingly.
Gerber files for the prototype printed circuit board are available for free download from the Elektor website, ref. 070280-1.zip. The SMD components used have the following outlines: R1, R2, R3, R5, C3, C4 and C5: 0603; C2: 0805; IC1: SSOP-12; T1: SO-8. All the SMD capacitors are ceramic, and electrolytics C1 and C8 must have a low ESR. R4 is a 50 mΩ SMD resistor rated at 1 W.

(070280-I)

239 Babybot

MECHANICS

There are many conceivable and feasible techniques to give motion to a robot. In most cases ordinary electric motors, servos and stepper motors offer the simplest solution. In particular if the actuators are required to deliver a considerable amount of power. But for very small objects other types of actuators also become suitable, such as the one used in this mini robot.
The term 'robot' may be a little of an exaggeration in this case. This creature has to be controlled from the outside and does not have any other artificial intelligence, but the method of motion is quite unusual and with a little modification could also prove useful in other projects.
BabyBot walks with the aid of four small PCB relays, which have been specially modified for this purpose. The covers have been removed and the legs have been soldered directly to the switching contacts. It will be clear that the step size of the leg will be minimal. After all, the 'stroke' that the switching contact can make is very small.
The legs cannot support and move much weight either. On the one hand this has to do with the limited pulling power of the electromagnet and on the other hand with the fragile construction of the inner workings of these small relays. It is likely that the link from magnet to switching contact will fall apart from time to time. And this means – depending on the type of relay – a lot of fiddling to put it back in the right place. BabyBot is by no means a real robust construction, but it is useful for experimentation and anyhow, the whole thing looks quite nice.

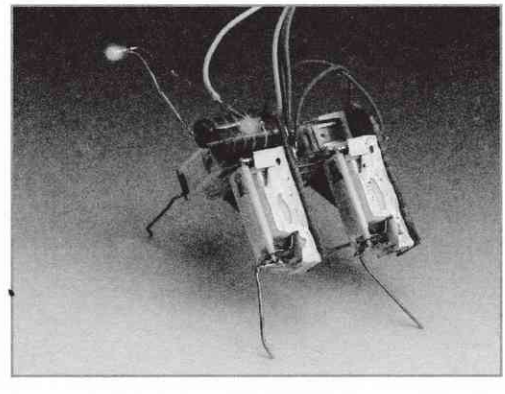

(070278-I)

Video clip of the walking mini robot:
www.xj3.nl/_dreijer/backsite/willem/babybot.avi

240 Robot Voice

Pascal Choquet

Fans of the film '2001 a Space Odyssey' will no doubt recall the polite yet sinister voice of HAL, the ship's computer. It stands to reason that all proper robots need a (not necessarily menacing) voice.

Those of you who imagine that a voice box would require a whole heap of ICs are mistaken; the ISD2500 ChipCorder family of ICs from Winbond contains almost all the necessary hardware in a single IC to record and playback audio messages.

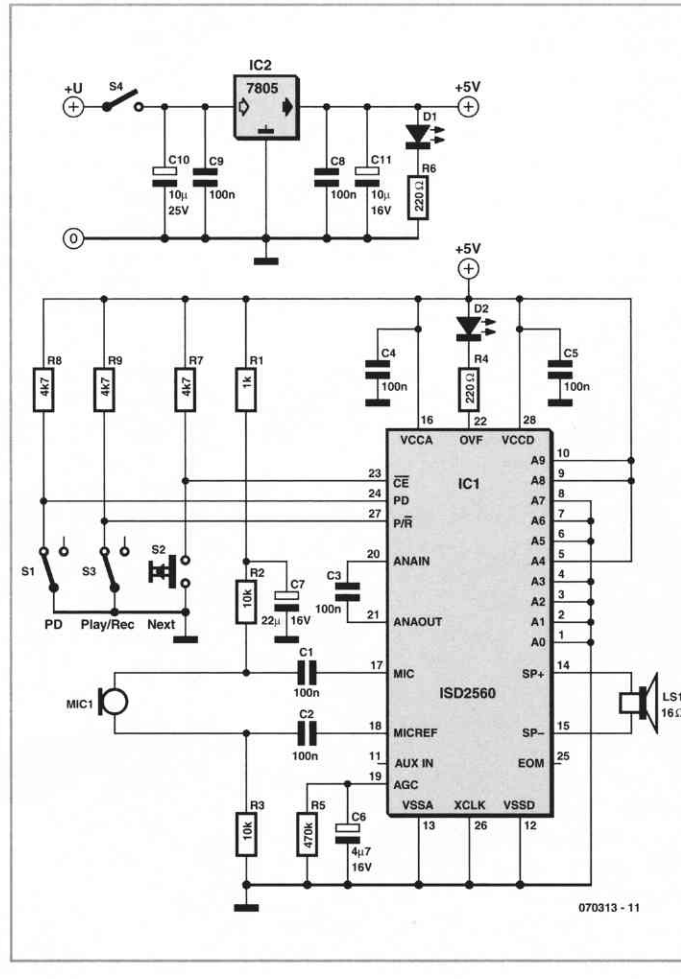

There are four basic models; 2560, 2575, 2590 and 25120, the numbers following 25 indicate the available recording time in seconds. The memory capacity of each version is actually the same but longer recording times are achieved by using a lower sampling rate. The chip with the shortest recording time therefore offers the best audio quality.
The circuit shown in the figure can be used for both recording and playback. A socket for IC1 fitted in both circuits will allow the chip to be moved into the robot once the sounds have been recorded.

Recordings are made by following this sequence.
First switch S3 to record mode (a low on pin 27). A press of S2 now begins the recording which is ended by another press on S2; a third press of S2 starts the next recoding period and so on. This can continue until there is nothing more to record or when LED D2 lights to show that the memory is full.
Playback can be performed by momentarily toggling S1 and switching S3 into 'play'

mode, now with each press of S2 the recorded messages will be sequentially played back. The recordings can be overwritten by toggling S1, switching S3 to record and then using S2 to start recording from the beginning again.

Some flexibility in the playback mode allows individual messages to be linked together; each recorded message is terminated by an EOM (End Of Message) flag when it is stored in the chip. Instead of storing complete phrases like 'obstacle ahead' for example it is more efficient to store 'obstacle' then 'ahead', 'to the right', 'to the left' and 'behind' and likewise for numbers 'one', 'two', 'hundred' 'point' etc allows voicing of the complete range of numbers from these basic elements.

The minimum playback circuit shown in uses the A0, PD, /CE and /EOM signals interfaced to the robot microcontroller. For playback PD is reset to '0' and to play the first message a low pulse is given on /CE. With A0 at '0' playback occurs at normal speed but with A0 at '1' the chip enters 'fast forward' mode where it advances through the message at 800 times its normal playback speed.
When the third message needs to follow the first for example, the processor sets A0 to '1' and pulses /CE low to fast-forward through the second message, waiting for the /EOM flag to go low. Once this occurs A0 is reset to '0' and a low pulse on /CE plays back the third message.

The /EOM output pulse can be less than 10 ms wide so it is better to use it to interrupt the processor rather than just poll its status. An example C code listing has been written by the author for a 16-bit Texas MSP430 microcontroller interfaced to this chip and is available for free download from the Elektor website, ref. 070313-11.zip.

(070313-I)

Web Link
www.winbond-usa.com/mambo/content/view/153/283

241 Clap Controlled Switcher

MISCELLANEOUS ELECTRONICS AND DESIGN IDEAS

Raj. K. Gorkhali

The circuit presented allows you to control home electrical appliances like TVs, fans, lighting, etc. by clapping your hands. Four different electrical equipments can be controlled using changeover contacts on relays.

The circuit diagram shows a condenser (electret) microphone M1 connected to the input of preamplifier T5. The sound picked up by the microphone is preamplified and fed to the input (pin 2) of a 555 timer IC set up in monostable configuration. The output of the 555 is connected to the clock input of a 7490 counter.
Whenever a pulse arrives at the clock input of IC2 (pin 14), it produces a 4-bit binary equivalent code at its four outputs. As an example, when the first pulse is applied to the 555's TRIG input, the binary coded output on the 7490 will be 0001, for the second pulse the output will be 0010, and so on. For the 15th pulse, the output will be 1111. On receiving the next pulse, IC2 automatically cycles back to state 0000.

The counter's four outputs control driver transistors T1 through T4. These, in turn, control the four relays RE1 through RE4, and their contacts, the equipment to be controlled.
Four rectifier diodes, D1 through D4, are connected across the four relay coils to prevent back-emf surges upsetting the operation of the circuit.

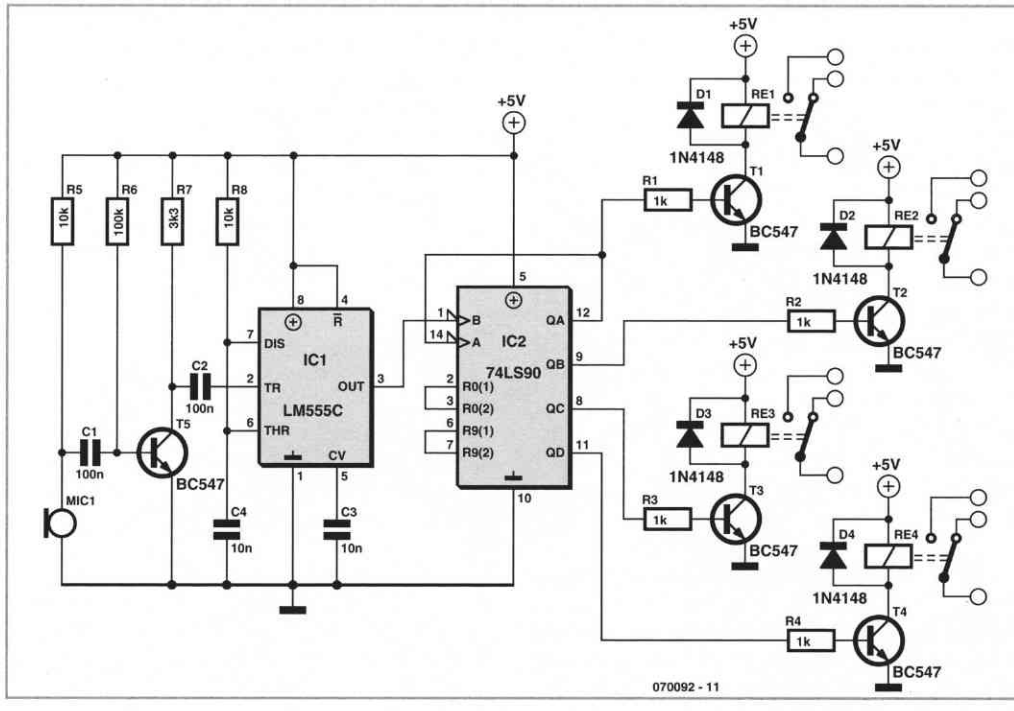

The circuit can be tested in a simple manner. Power the circuit from a regulated 5 V (or 6 V) supply. Temporarily disconnect the CLKA input of the 7490 from the 555 output. Solder a wire on the CLKA input and use it to touch the positive supply rail. Each time a clock pulse is applied in this way, RE1, RE2, RE3 and RE4 should energise or de-energise in one of 16 different configurations.

Re-establish the connection between IC1 and IC2 and clap your hands near to the microphone. The relays should respond as with the clock pulse test. Finally, connect four electrical devices to the relay contacts.

The use of a 5 V regulated supply is recommended for this circuit. The relay contacts should be rated for 230 VAC as well as for the maximum current the electrical equipment is likely to draw. **All relevant electrical safety precautions should be observed when connecting mains powered loads to the relay contacts.**

(070092-I)

242 An Inclinometer for your Robot

SENSORS

C. Tavernier

If your mobile robot's sole function is to roam about the tiling or wooden floors of your home, it's not very likely to have much need of the sensor we're going to be describing in this article. However, if it has to confront the harsh realities of the ground of the outside world, with its holes and bumps, an inclinometer may prove extremely useful in order for it not to keel over at the first, ever so slight unevenness.

Before electronics knew how to accomplish all the feats that we are used to today, an inclinometer was a purely mechanical system, with all the difficulties of implementation, cumbersomeness, and lack of accuracy this implied. Might as well say that its use in an amateur robot was, if not impossible, at least very difficult.

For a few years now, this has no longer been the case, thanks to the marketing by Analog Devices of 'solid state' accelerometers, i.e. produced in the form of ICs, with no visible moving parts.

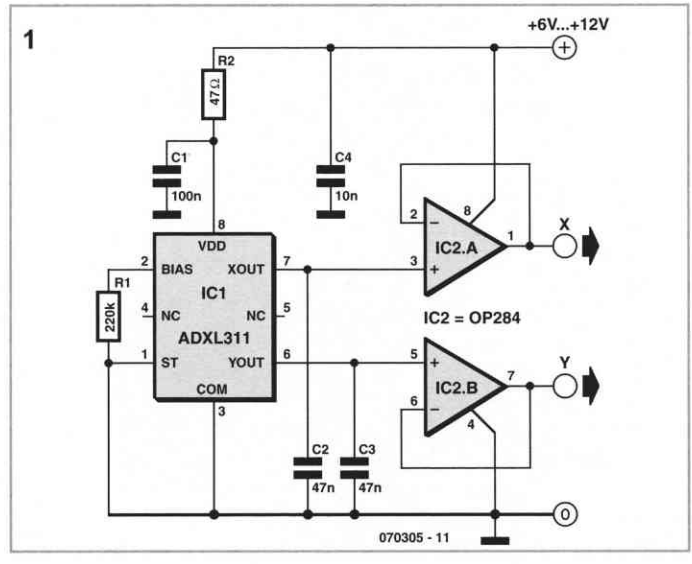

In fact, it's still impossible to measure acceleration without employing some kind of moving part, but nowadays this consists of a minute polysilicon structure suspended by four springs of the same material above the chip of the accelerometer IC. When this mobile element is subjected to acceleration, it deforms, and this deformation is revealed by a variation in the capacitance between a plate located on the mobile element and two fixed plates on the chip itself. Two out-of- phase squarewave signals are applied to the fixed plates. When the mobile plate is subjected to acceleration and moves, these become unbalanced, and phase demodulation yields a voltage proportional to the acceleration.

Of course, the user is quite unaware of all this going on, but has available at the accelerometer IC output information reflecting the acceleration registered – in analogue or digital form, depending on the type of IC chosen.

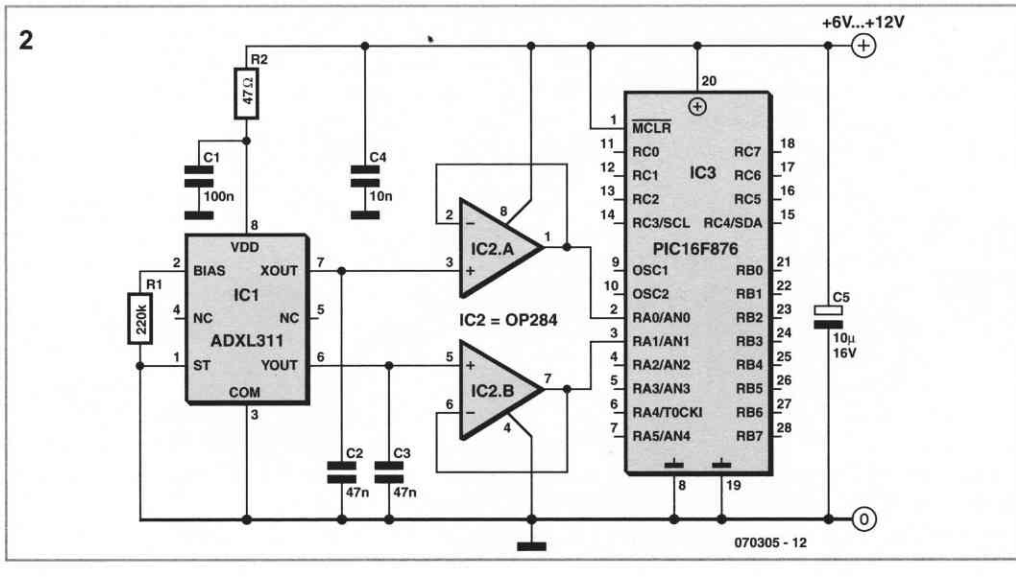

For our robotics application, we have decided to adopt a relatively inexpensive accelerometer in the form of the ADXL311 from Analog Devices. Do note right away, however, that this IC is no longer being produced, but is still widely available from retailers. If it should eventually disappear completely, it could be replaced by the ADXL320, much more recent and electrically compatible, only the pin-out being different.

The ADXL311 actually includes two highly sensitive accelerometers at right-angles, with positioning better than 0.1°. Because of this, and if it is placed parallel to the surface of the Earth, it is influenced by the acceleration due to the Earth's gravity, and so can indicate left/right inclination (roll) or forward/backward (tilt). In this way we create a dualaxis inclinometer.

These inclinations can be exploited in an absolute form if we want to know exactly the angle between the inclinometer, hence the IC carrying it, and the ground, or in a relative form, if we want just a limit indication of what the robot can withstand before it topples over.

In the case of the ADXL 311 or the ADXL320, the absolute inclination is given by the equations:

Tilt = arcsin (A_X/A_{X0}) and
Roll = arcsin (A_Y/A_{Y0})

where A_X and A_Y are the analogue voltages supplied by the accelerometer when it is inclined, and A_{X0} and A_{Y0} the voltages supplied when it is perfectly horizontal.

As shown in **Figure 1**, the accelerometer application circuit doesn't amount to very much. The only important elements are in fact capacitors C2 and C3, which filter the accelerometer output voltage. It actually has a passband of several kHz, and can therefore react to very fast vibrations, not at all what we want in an application as an inclinometer. With the values chosen here, the passband is restricted to 100 Hz, easily enough.

The two opamps arranged as followers avoid any external influence on these filter capacitors and allow the accelerometer to be connected without special precautions to any microcontroller or ADC input.

The only minor problem you might encounter constructing this project is that the accelerometer is in an SMD package, which is not always easy for soldering onto an amateur PCB. There is now a module, ref. Accel, from Lextronic (*www.lextronic.fr*), that includes all the components in Figure 1 mounted on a tiny 15 × 20 mm PCB (see photo on next page).

Using our accelerometer as an inclinometer involves measuring its analogue output voltages on both axes and subtracting from them

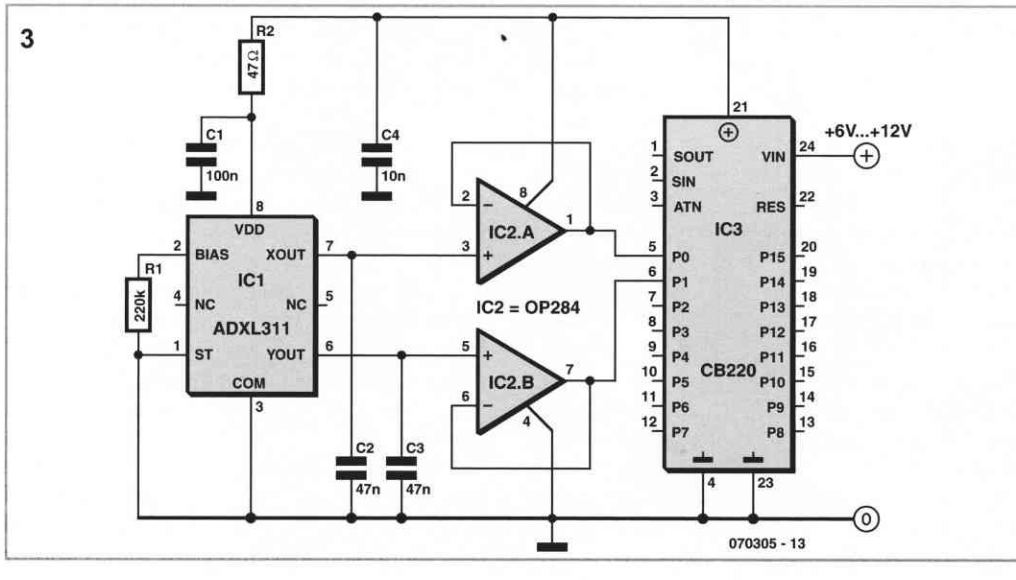

the voltages at rest, that is, when the IC socket is perfectly parallel to the ground.

Figure 2 shows an example of the use of this inclinometer with a PIC microcontroller with a built-in ADC, while **Figure 3** shows the same type of circuit, this time with a Cubloc CB220. We are not giving you a program for exploiting the information supplied by the inclinometer as, in both cases alike, it takes just two instructions to access the tilt or roll information. So for example you would write

```
tilt = Adin(0)
tilt = tilt – 512
```

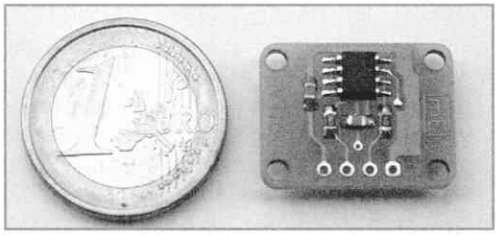

```
' adjust according to the voltage output
' when the inclinometer is horizontal
```

to recover the tilt information using a Cubloc CB220. While you might write, for example,

```
tilt = Adc _ Read(0)
tilt = tilt - 512
' adjust according to the voltage output
' when the inclinometer is horizontal
```

to recover the tilt information with a PIC programmed in Basic (in this example, MikroBasic compiler and 10-bit ADC).

The same instructions will obviously be used for roll, but using analogue channel 1 if you have adopted the circuit diagrams of Figures 2 or 3.

Then it only remains for you to exploit this data to prevent your robot's falling over on terrain that's too steep for it!

www.tavernier-c.com (070305-I)

243 Catapult for Robots... or Other Uses

ACTUATORS

Pascal Liégeois

In this age of laser rays, it seems anachronistic to talk of catapults – but it's not as absurd as you might think.
Many robot competition themes around the world have involved at some point picking up balls, of different formats according to the competition, and projecting them into a receptacle, often at quite substantial distances for our little robots.

There is one well-known type of very light ball, the ping-pong ball, that is very often used as a projectile in this type of competition.
Besides picking up these balls, projecting them often poses a problem of accuracy and reliability.

In this short article, the author is suggesting his own solution – not necessarily the best in the world, but at least it is proven.

This catapult re-arms all by itself after each shot, within 2 seconds, and it's range can be adjusted by altering the ballistic curve, using just a single potentiometer.

The very simple, cheap electronics don't require any programmable components, and have an output available to tell the carrier about the status of the catapult.

Circuit
The main element of the system is a perfectly ordinary standard servomotor, as used in modelling. This type of actuator is a small marvel, containing as it does a position-servoed

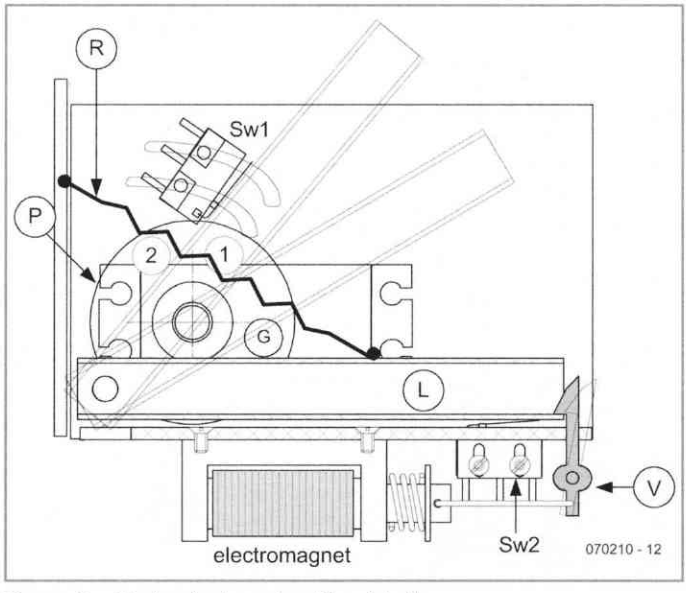

Figure 1 Mechanical construction details.

motor with step-down gearing, by way of a potentiometer and suitable electronics.

A servomotor is controlled using a fixed frequency signal (50 Hz) whose pulse width is variable, generally from 1 to 2 ms.

To produce this signal here, we use the famous NE555 (IC1) as an astable, wired in such a way as to provide the required frequency. Diode D1 in parallel with resistor R1 determine the duty cycle, and set the negative-going part of the pulse at around 18 ms. The width of the positivegoing part is adjustable by means of R2 and P1 or P2.

The output of the 555 feeds the input to the servomotor.

The 'electromechanical' part of the circuit is based on the use of a DPDT relay and two microswitches. Sw1 is used to trigger automatic re-arming of the catapult, while Sw2 fulfils two functions: it gives information about catapult re-arming, and once this re-arming has taken place, it lets us reposition the servomotor in the firing position.

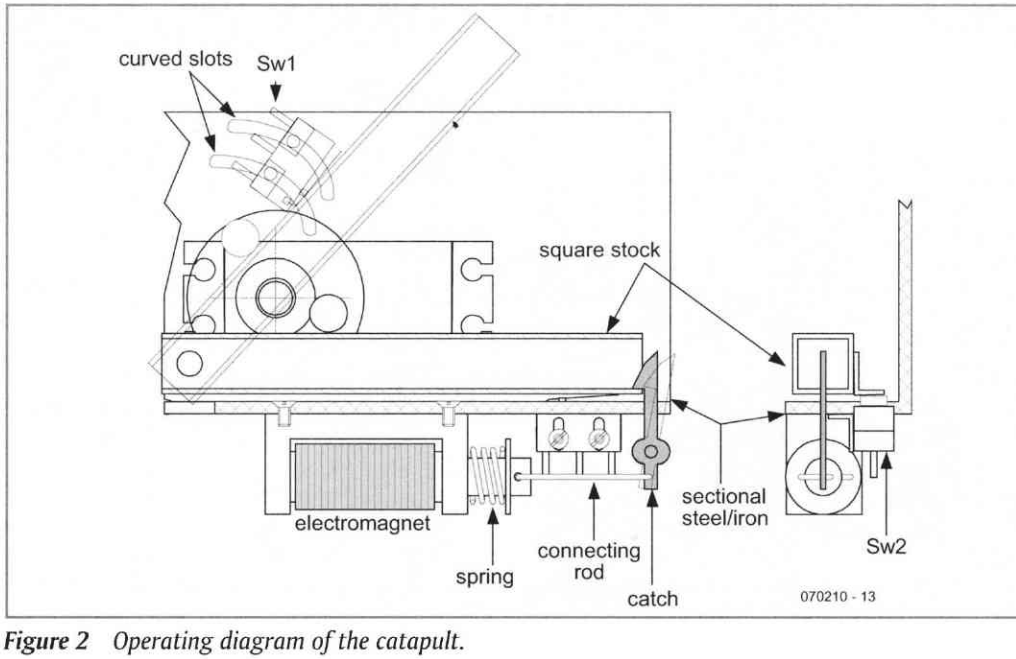

Figure 2 Operating diagram of the catapult.

In the circuit diagram, Sw2 is shown operated, corresponding to the catapult's rearmed position. Referring to the drawing in **Figure 1**, it's easy to follow the operation of the catapult.

When the solenoid is briefly powered via the 'FIRE' input that controls transistor T1, the lever L is released, pulled up by spring R. This lever ends its travel up against the rubber stop G attached to the motor's servo arm, wheel P.
In coming to rest against this stop the projectile is fired, and the lever also operates Sw1, energizing the relay RE1, which in turn latches via its contact re1B and microswitch Sw2 (by this time returned to its rest state).

The servo motor starts to turn clockwise and the rubber stop forces the lever back to its re-armed position. At the end of the travel, the lever hooks under the trigger catch; at the same time, Sw2 is operated, and unlatches the relay, which goes back to rest, commanding the servomotor to return to the firing position.
Preset P1 lets us adjust the upper position of the stop and thereby the range of the shot, as explained in **Figure 3**.

P2 lets us set the latching point of the lever in the re-armed position.
Figure 1 shows two firing positions (greyed of the lever, and the corresponding positions for the rubber stop (numbered 1 & 2).
To adjust the firing range, you simply need to know that, logically enough, in position 1 the ball will go higher, and in position 2 the ball will go less high. Everything depends on how it is being used: if you want to drop a ping-pong ball in a pocket in the ground, it's best to plan on getting there via successive bounces, and so to fire higher. On the other hand, if you are aiming for a basket high up, you need to aim 'spot on' into it, and so allow the lever to go higher.
Once the adjustments have been set, you'll be amazed by the repeatability of this system.

Construction: electronics

The electronic part is relatively simple and can be built on a small piece of prototyping board. The DIL relay RE1 can be fitted into a turned-pin DIP14 socket.
The servomotor connector can be made using three sections (a 10 mm length) of 2.54 mm (0.1") pitch SIL pinheader strip. Mark the signal pin, so as to avoid any mistakes when connecting the servomotor.

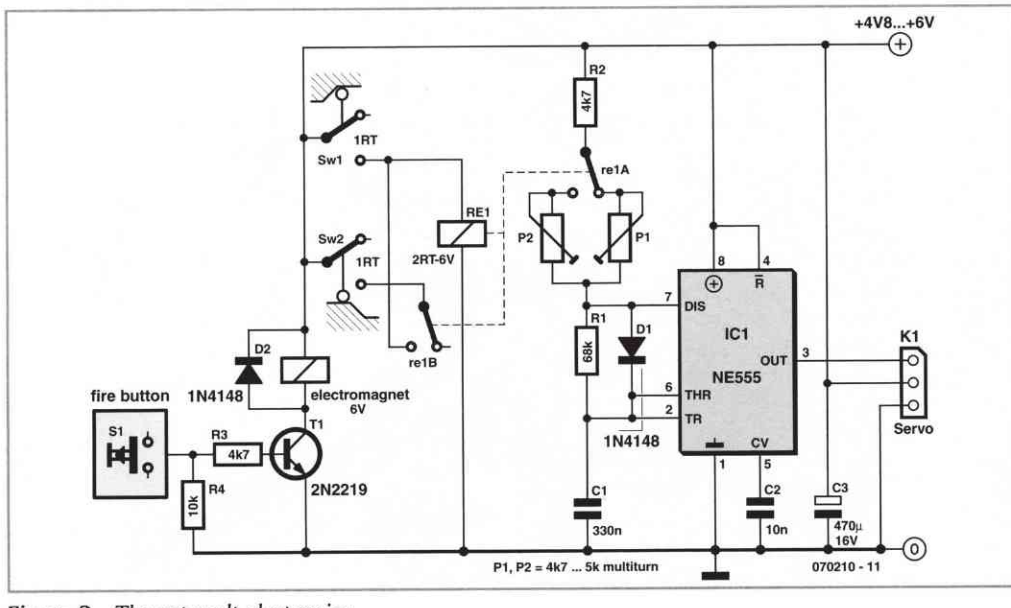

Figure 3 *The catapult electronics.*

The IC can be fitted into an 8-pin socket. Presets P1 and P2 should preferably be multiturns, horizontal or vertical.

Check your wiring carefully. Power the circuit without IC1 or the relay fitted. Check the supply rails to IC1 and to the commons of the switches, which will be connected to the circuit via wires of around 10 cm or so. Check the presence of $+V_{CC}$ on the central pin of the servomotor connector.
Connect the 'FIRE' input briefly to $+V_{CC}$ and check that the solenoid operates.

Construction: mechanics
Although not terribly complicated, the mechanics do require a little care all the same.

The drawing in **Figure 2** details the key parts and elements of the system. The chassis is made mainly from a piece of Lsection aluminium angle, or an equivalent olded section. The servomotor, fitted with an approximately 35 mm diameter wheel as its servo arm, is mounted on the vertical plane of this angle.
The pivot for the lever is slightly forward of the servomotor shaft. In my own case, I made this lever out of 5 mm square brass tube. This hollow section allows the little catch to hook into the lever once it is re-armed. This catch is operated by the solenoid via a small connecting rod. The solenoid is a 6 V type, mounted under the horizontal plane of our aluminium angle.
The positioning of the microswitches is important, particularly that of Sw2, whose position is set once the optimum re-arming position has been set. This setting can only be done once the electronics described above have been built. Sw2 is mounted onto the angle by way of a small bracket with two oblongs fixing slots, to allow the microswitch to be positioned.
For Sw1, two curved slots will need to be made in the vertical plane, where the servomotor is mounted, so as to be able to adjust the firing range, in conjunction with preset P1.
Once the mechanics have been completely finished, the lever should be put into the lowest position, which will slacken the solenoid spring. Check that the catch hooks properly onto the lever by at least 1 mm. This action must take place without forcing, the solenoid spring must allow the catch to hinge to the right before hooking into the tube.
Check that the solenoid is properly fitted with its return spring, which may be fitted between the coil and the armature, or actually inside the coil, within the space where the armature moves.
The spring must push the armature lightly so that it comes back out of the coil once it has been activated.

Adjustment
Setting-up is easy. Don't fit the relay into its socket. Put the lever into the re-armed position and check that the catch holds it properly in the horizontal position. Release the catch and make sure the lever is pulled up properly by the firing spring.

Apply power; the servomotor will take up a random position. Using P2, get the servomotor, via the rubber stop, to position the lever horizontally until the catch engages. Adjust the position of Sw2 so that it is operated by the small bracket attached to the lever.
If the servomotor fails to operate, check the circuit, the soldering, and that the servomotor connector is the right way round – i.e. that the signal and earth pins are not reversed.
Turn off the power. Fit the relay into its socket. Re-apply power. The servomotor should take up some random position. Adjust P1 to bring the roller into any firing position (1, for example). Turn off the power and adjust Sw1 so it is operated by the lever in its upper position.
Re-apply power. The catapult should re-arm all by itself and the servomotor should then return to the upper position as described above. Everything is now working. That's fine. Operate the solenoid to check that firing takes place correctly.
You can now fit the lever with a support for the projectile (ball). It's worth noting that the unused NC contact of Sw2 carries $+V_{CC}$ indicating the catapult is re-armed...

(070210-I)

244 Low Cost USB Demo Board

C your way through USB

Martin Valle

Slick graphics, reading analogue values and making them appear in graphs, cockpit-style meters and dials, all on USB… How do they do it?

Like this: a single board connected up to the PC via a USB link and sporting an advanced PIC microcontroller. Add some software and there's your USB demo board doubling as a development system to help you discover how USB is implemented on a microcontroller programmed to handle analogue and digital I/O for real world applications.

USB Quick & Easy

- 2 analogue inputs (1 on pot)
- 2 digital inputs (switches)
- 4 digital outputs (LEDs)
- 1 (one) IC: PIC18F4550 (available ready-programmed)
- Full suite of software building blocks
- Project software for Builder C++ 6
- Demo program for 2-channel A/D with graph/meter readout on PC

Hardware

At the heart of the circuit in **Figure 1** is a PIC18F4550 microcontroller from Microchip. This has built-in USB connectivity – if you

1

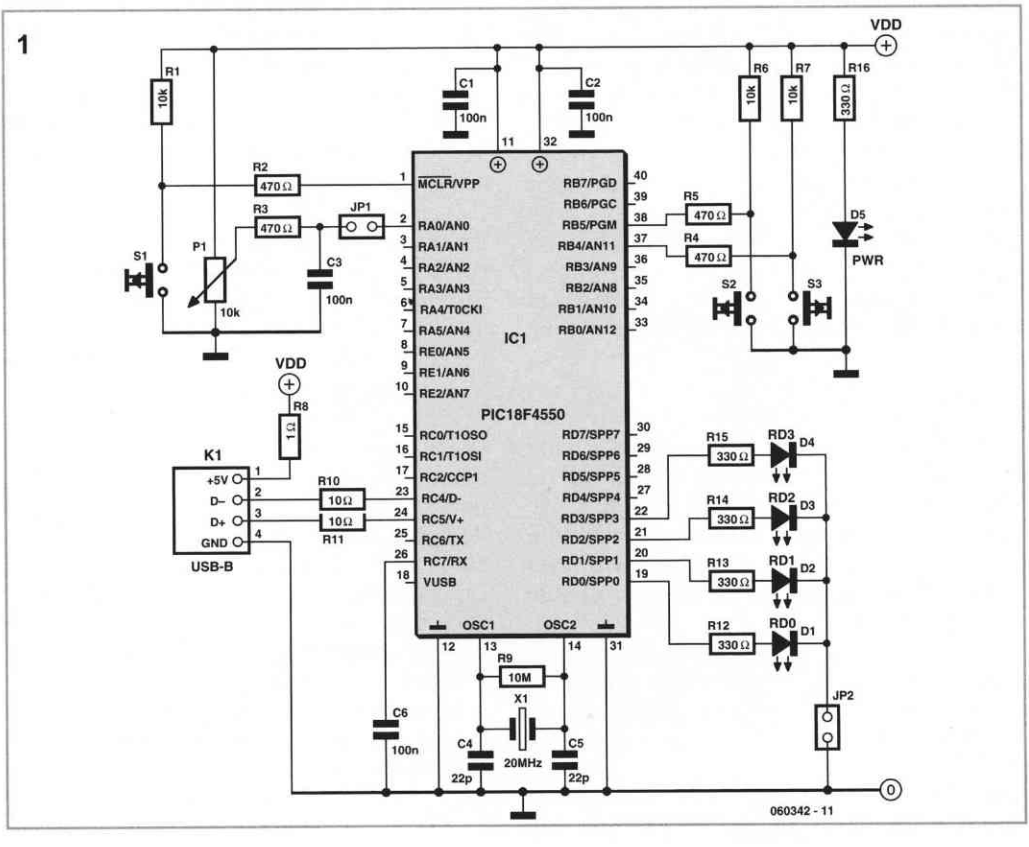

know how to activate it! The micro is clocked at 20 MHz by quartz crystal X1. The switches (except S1), LEDs (except D5) and the potentiometer connected up to the PIC micro are your basic I/O (input/output) devices.

The circuit should be easy to build on a piece of prototyping board or Veroboard (a.k.a. perfboard or stripboard).

Software

In stark contrast with the minimal hardware, the software for this project is quite extensive. You will like to hear that it's available free of charge from the Elektor website as archive # 060342-11.zip.

The ready-programmed PIC18F4550for the project is available too, it's item 060342-41 from the Elektor Shop.

There are actually four zipped files:

MCHPFSUSB.zip contains all the project components freely available from Microchip plus the custom project for the microcontroller, the demo version software and the bootloader 'talker'.

Project.zip contains all the files needed to build the project in Builder C++ 6.

REQUIRED.zip contains the files of the project.zip that you have to copy if you want to make a new project.

Without builder.zip contains all the files needed to run the .exe file without the Builder installed in the computer.

Here's how to process the software.

1 Extract the file *MCHPFSUSB.zip* to the C: root directory. Check that there is no duplicated folder MCHPFSUSB, like: *C:\MCHPFSUSB\MCHPFSUSB\folders_xx*, instead of: *C:\MCHPFSUSB\folders_xx*.

2 Using a suitable programmer, program the PIC18F4550 microcontroller with the file: *C:\MCHPFSUSB\fw_factory_hex\picdem-fsusb.hex*. The chip is also available ready-programmed.

Waking up the F4550

Once you have built the project and checked it for mistakes, you can connect the USB to the host. For the first time connection, Windows XP is recommended. As soon as you connect the board to the host, LEDs D0 and D1 will start to blink, then the host will detect the device as 'PICDEM FS USB Demo Board (C) 2004' and ask for the drivers. You should select the drivers located in:

C:\MCHPFSUSB\Pc\MCHPUSB Driver\Release

Windows will nag that this device does not pass the Windows logo test. Ignore and simply continue the installation of the device.

You can check for the proper installation by exploring in the Device Manager window, it should look like **Figure 2**.

Keep pushbutton S3 (RB4) pressed and the reset the microcontroller by pressing and releasing S1. This procedure takes the microcontroller into 'bootloader' mode. The host will detect a new device, and it is necessary to

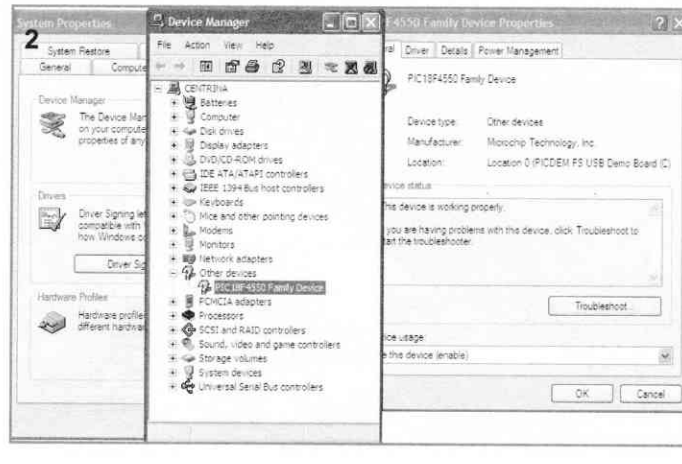

repeat the driver installation procedure with the same driver location:

C:\MCHPFSUSB\Pc\MCHPUSB Driver\Release

From now on you can load new programs to the microcontroller via the bootloader, following the above sequence using the S3 and reset pushbuttons.

The PC application that communicates with the bootloader is the executable file:

C:\MCHPFSUSB\Pc\Pdfsusb\PDFSUSB.exe.

The Pdfsusb tool must show in the selection square the device connected, just as in **Figure 3**.

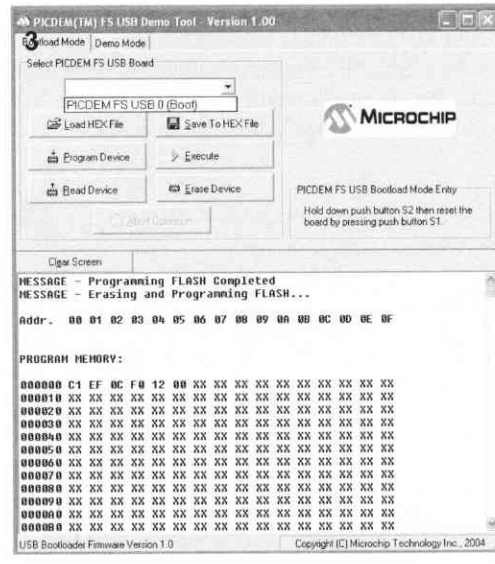

Demo mode and a small hurdle

If you reset the board without keeping S3 pressed, the microcontroller will run the program loaded in memory (i.e., not the bootloader).

The same if you click the '/ Execute' button in the application. That's why the first device detected by the host was not the bootloader – it was a program to test with the other part of the Pdfsusb tool (Demo mode), this is the upper left tab behind the Bootload Mode tab.

This mode is shown in **Figure 4**. It allows reading an approximation of the position of the potentiometer connected to RA0, control the state of the LEDs connected to RD2 and RD3 and measure a temperature of an SPI sensor that's not actually connected to the board (so don't pay attention to the temperature readings).

The Demo firmware uses a few pins to monitor the USB main voltage (this is not implemented in the schematic). It may happen that this check fails after connecting the device to the computer. Fortunately, the error applies **to the Demo firmware only**, not to the Bootloader. There is an easy way to avoid this – in every project contained in the MCHPFSUSB folder there is a file *C:\MCHPFSUSB\fw\project_name_folder\autofiles\usbcfg.h*

It contains the declarations that are causing the problem. Just comment-out (//) the two SENSE_IO definitions as shown **Listing 1**.

Having done this you can reload the Demo project, or any project for that matter, and all should work fine.

Build it!

Now, it is time to explore the example application. As before, reset the microcontroller

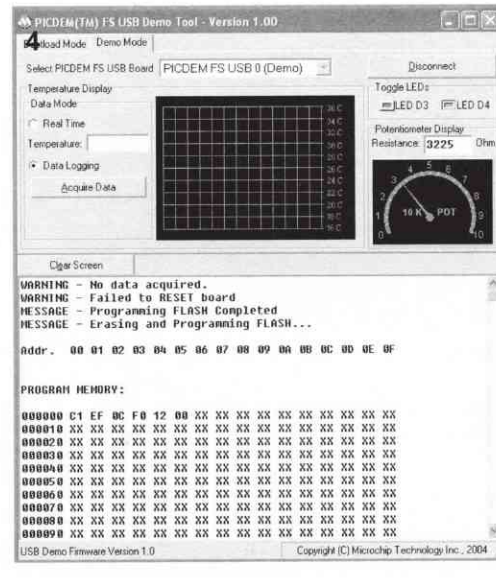

```
Listing 1
/** D E F I N I T I O N S ***************************************/
#define EP0_BUFF_SIZE           8 // 8, 16, 32, or 64
#define MAX_NUM_INT             1 // For tracking Alternate Setting

/* Parameter definitions are defined in usbdrv.h */
#define MODE_PP                 _PPBM0
#define UCFG_VAL                _PUEN|_TRINT|_FS|MODE_PP

//#define USE_SELF_POWER_SENSE_IO
//#define USE_USB_BUS_SENSE_IO
```

with S3 pressed, to run the Bootloader and load the micro with the hex file located in:

C:\MCHPFSUSB\fw\Hid02/_outut/NICAPM.hex

Then, run the program.

You can run the PC application directly without C++ Builder 6 installed in the computer by using the stuff in the archive file called: without builder.zip. Obviously the microcontroller must be connected to the host and running the NICAPM firmware.

The window of the demo application should look like **Figure 5**, showing the signals of Channel 0 (AN0, pin 2) and Channel 1 (AN1, pin 3). There's also the archive file called *project.zip* if you want to modify something in the PC project.
If you want to make a new Builder project, you only have to look after two things:

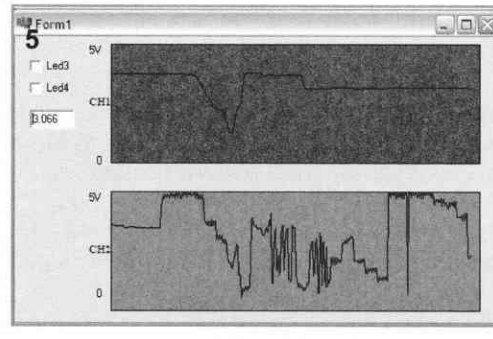

5

1 Add the *hid.lib* file by doing:

Project → Add to project → hid.lib

2 Change the Data alignment from *Quad word* to *byte* by doing:

Project → Options → Advanced Options → Data alignment.

(060342-I)

245 Dual Battery

POWER SUPPLIES, BATTERIES AND CHARGERS

For enhanced operational reliability

Paul Goossens

Using rechargeable batteries to power circuits is a proven method for providing energy to mains-independent equipment. A major disadvantage of this is that the battery usually turns out to be empty at the most inopportune moment. As a user, you are unexpectedly confronted with the fact that the circuit suddenly doesn't work any more. Sometimes this is only a minor inconvenience, but at other times it can be a catastrophe. For instance, just imagine what happens to a model airplane if the radio receiver stops working in

flight due to an empty battery. We can assure you that the consequences are anything but pleasant.

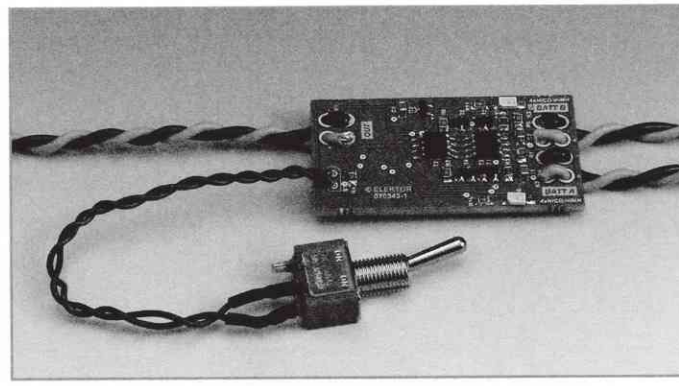

Solution

The solution to this problem is actually quite simple: use two batteries! When one of the batteries becomes discharged, the second one can take over and continue supplying power. Of course, all this must happen automatically, so we need a handy circuit that takes care of everything for us.

The design presented here is intended to be used with circuits (such as receivers used in models) that use NiCd batteries composed of four cells.

The circuit is quite compact, and thanks to the accompanying PCB populated with SMDs, it is easy to fit into existing equipment.

Simple

The operating principle is simple: IC2 measures the terminal voltage of battery A. If it drops below 4.38 V, the $\overline{\text{RESET}}$ output goes low, and otherwise it remains high. IC4 does the same thing, but for battery B.

Both signals go to a flip-flop consisting of IC1a and IC3d, which determines which of the batteries is to be used.

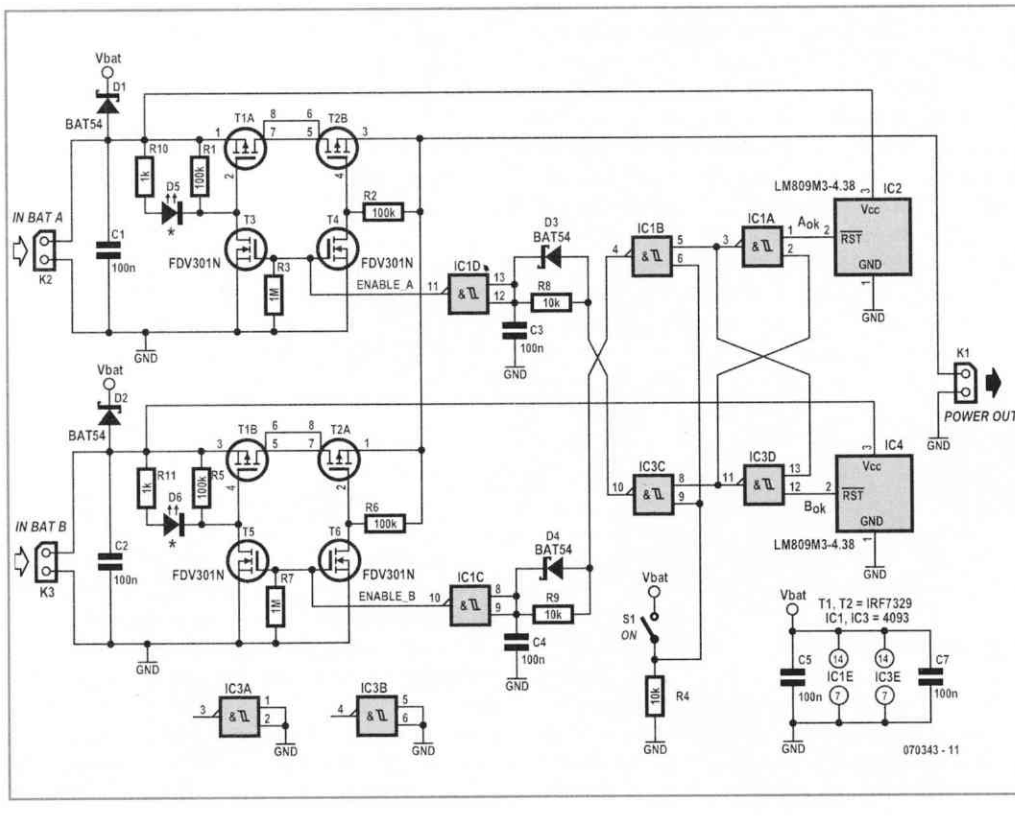

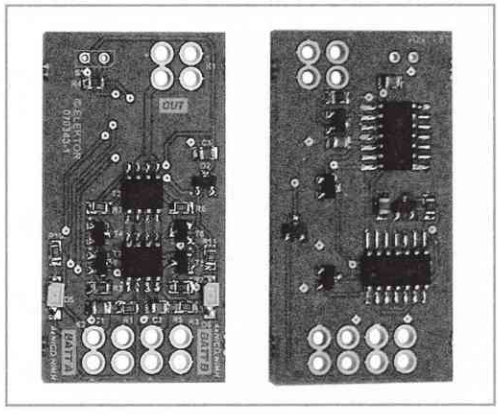

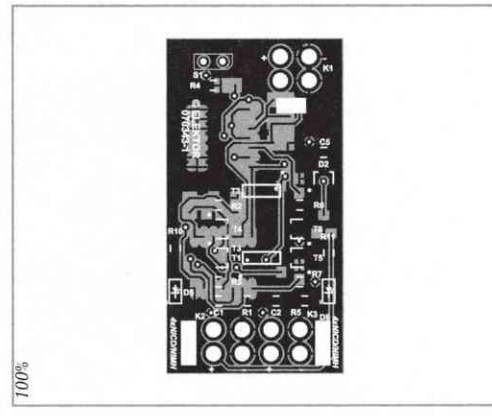

100%

If the voltage across battery A is too low, the output of IC1a will always be high. As a consequence, battery B will be active. The same thing applies in reverse to the output of IC3d. When both batteries are discharged, they will both power the circuit, in keeping with the motto 'better a little bit of juice than no juice at all'.

Components D3, R8 and C3 provide a switch-on delay that causes battery switch-on to be delayed somewhat. This is because it is undesirable to have both batteries power the circuit at the same time during switchover from one battery to the other. That would cause large equalization currents to flow due to the difference between the terminal voltages of the two batteries.

Switch

The best choice for the switching device is a FET instead of a bipolar transistor. This saves energy, since no base current is necessary. A disadvantage of a MOSFET is that it always has an intrinsic diode. This diode is quite annoying in this circuit, since the one battery can charge the other battery via the diode. A simple solution would be to wire a diode in series to prevent this.
Unfortunately, a diode always has a voltage drop (approximately 0.3 V with a Schottky diode).

To solve this problem, we use a second MOSFET wired in the opposite direction. The underlying trick here is that the channel of a FET conducts in both directions when it is switched on. This eliminates the effect of the forward voltage of the internal diode.
LEDs D5 and D6 indicate which battery is in use.

Components list

(**all R and C:** SMD 0805 case)

Resistors
R1, R2, R5, R6 = 100 kΩ
R3, R7 = 1 MΩ
R4, R8, R9 = 10 kΩ
R10, R11 = 1 kΩ

Capacitors
C1-C6 = 100 nF

Semiconductors
D1-D4 = BAT54 (SOT-23)
D5, D6 = LED red (SMD 1206)
IC1, IC3 = 4093 (SOIC-14)
IC2, IC4 = LM809M3-4.38 (SOT-23)
T1, T2 = IRF7329 (SOIC-8)
T3-T6 = FDV301N (SOT-23)

Miscellaneous
Connecting wires
PCB no. 070343-1
(see *www.elektor.com*)

Use

The circuit is very easy to use. Connect a four-cell NiCd battery to each of the battery inputs

(K2 and K3). Then connect output K1 to the circuit to be powered.

Switch on the supply voltage with switch S1. The LEDs now indicate which battery is in use. If things every get so far that both batteries become deeply discharged (Heaven forbid!), this can be recognised by the fact that both LEDs are lit.

(070343-I)

246 Bolo

MECHANICS

Abraham Vreugdenhil

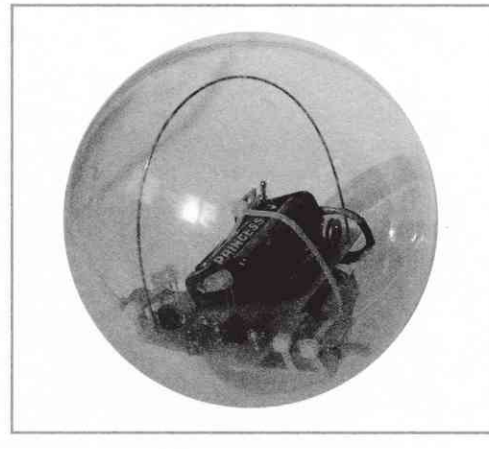

Bolo is a light-seeking robot built into a plastic ball. The advantage of a ball is that if it gets stuck, it can always go back the same way it came. If you put a robot inside a ball, it can always back up and then roll away from any obstacle it runs into.

Drive mechanism

To enable the robot to drive the ball, the shafts of the motors are fitted with lengths of bicycle valve tubing to give them grip. The shafts rest directly on the inner surface of the ball. The robot also has a single support wheel made from a plastic bead. A round hoop is fitted to the top of the robot so it will always land on its 'feet' (wheels) if it is thrown with a swinging motion.

Motors

The rotational speed of the motors is on the high side. If you were to let the robot run continuously, it would pass through the available space rather quickly. To avoid this, the motors are switched on for one second and then off for one second. After they are switched off, the light level is measured and a new decision is made as to which direction the ball should roll for another second.

Electronics

The selected microcontroller is an 89C2051. Among other things, it incorporates a comparator that is used in this design. Two BPW41 photodiodes connected in series are used as the light sensors. The junction of the two diodes is connected to one input of the comparator. A 1-kΩ resistor is connected in series with each BPW41 in order to limit the current through the sensors if the light is excessively bright. A 47-kΩ potentiometer is connected to the second comparator input. This is used to set the light sensitivity.

The two eyes are formed by LEDs, which are connected to the microcontroller by a 470-Ω resistor. The two motors are driven by the microcontroller via Darlington transistors. The author did not have these on hand, so an IC with an array of seven Darlington transistors (type ULN2003) was used for the prototype, with only two of the transistors actually being used. If more power is needed, two or more inputs and outputs can simply be connected in parallel to boost the power.

The motors are powered by two AAA batteries in series, and the remaining electronics is powered by a 9-V block battery.

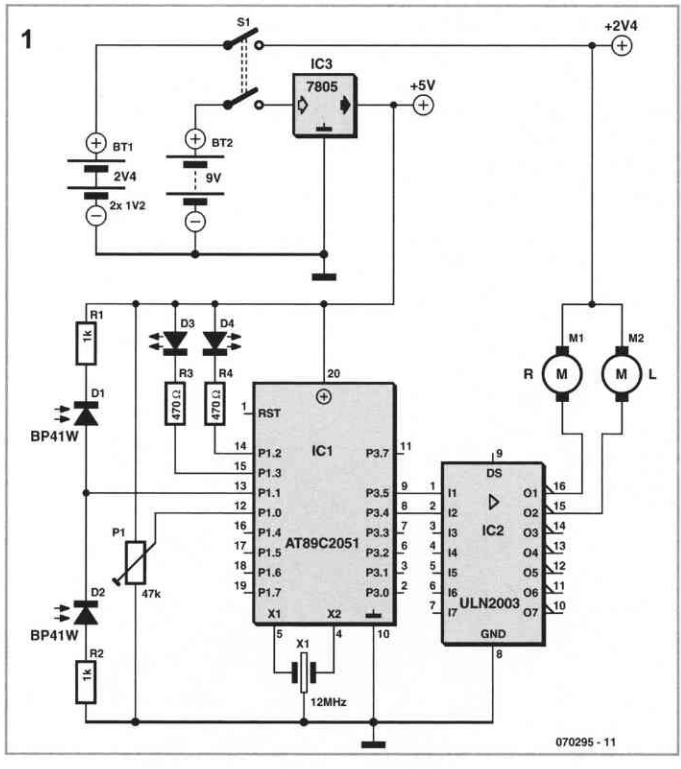

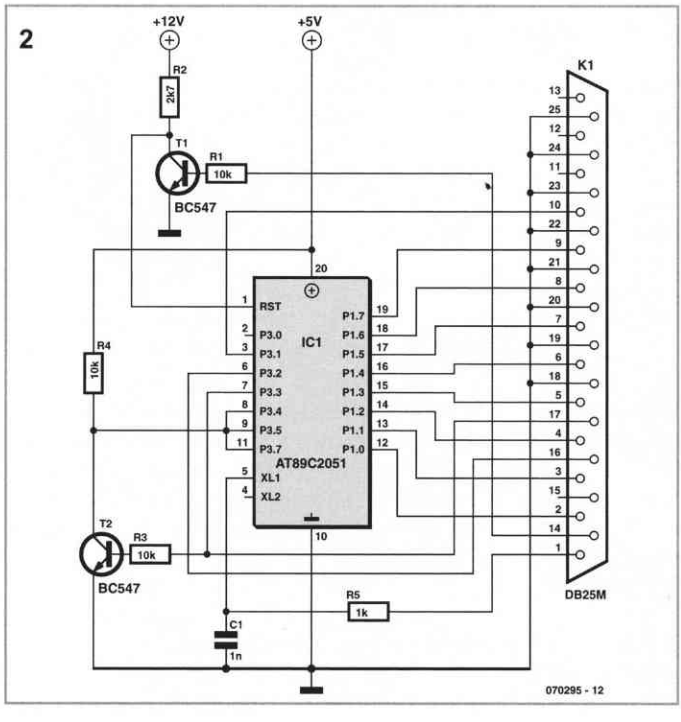

A 7805 voltage regulator generates a stabilised voltage from this battery. Both voltages can be switched on and off simultaneously using a double-pole switch. If both systems were powered from the same battery, brief voltage dips could be produced when the motors are switched on and off, which could cause the microcontroller to be reset. To prevent this, it's a good idea to use separate supplies for the two systems.

Behaviour and/or extension

A possible extension would be an RC5 receiver, so the robot could receive commands from a 'standard' remote control unit. This would make it possible to steer the ball in a particular direction or select one of several different behaviour patterns (such as sight seeking, light avoiding, or random).

There are many conceivable behaviour patterns for robots. The compiler used for the microcontroller in this robot, BASCOM-8051, provides a specific command for receiving RC5 signals. Such an interface would thus be easy to implement. As it stands, Bolo only behaves as a light-seeking robot.

Programming

The 89C2051 can be programmed using a simple programmer. BlowIt is a programmer consisting of just a few voltage regulators, two transistors, and a

few resistors and capacitors [1]. Of course, it also has a 20-pin IC socket and a 25-way D-sub connector. All of this can be assembled on a piece of perforated prototyping board. The author also added a transistor and an LED to indicate when data is being written to the microcontroller.
The schematic diagram for the BlowIt programmer and additional information are available on the Internet.

This programmer can easily be driven by BASCOM-8051 or BASCOM-LT. The software for Bolo can be downloaded free of charge from the Elektor website (file no. 070295-11).

(070295-1)

Web Link
[1] *www.geocities.com/dinceraydin/8051/index.html*

247 Radio Remote Control for PDAs and Smartphones

COMMUNICATIONS

Peter Zirngibl

On his website, under the title 'AVR Blue Remote', the author describes (in German) a Bluetooth- based remote control unit featuring six output relays and six sensor inputs. The site also includes Smartphone software (*avrblueremote.exe*) and microcontroller software (*avrblueremote. hex*). These can be used as the basis for projects such as a short-range (up to 10 m or so) remote garage door opener or a remote lighting controller. The software is free for use by private individuals.

Any Smartphone running the Windows Mobile 5.0 operating system can be used as the transmitter. The receiver used is the postage-stamp-sized Blue Nice Com III Bluetooth module with integrated chip antenna from Amber Wireless.

The module is based around the LMX9820A from National Semiconductor, and decoded messages are passed over a UART-like interface (TX and RX signals) between it and an Atmel AVR ATMega8L microcontroller. Connected to the outputs of the microcontroller is a ULN2803 octal driver which can comfortably switch enough current to drive power relays.
Completing the circuit are a 3 V voltage regulator (type LP2950-3V) and an ISP (in-system programming) connector.



Four LEDs indicate the status of the connection: LED1 shows when the microcontroller has received data correctly and LED2 indicates when a timeout has occurred. The Bluetooth module's LEDs indicate the link status (LED3) and transmit mode (LED4).

The printed circuit board layout for the circuit has to meet several constraints. For maximum range there should be no ground plane, conductors, components or other metal parts

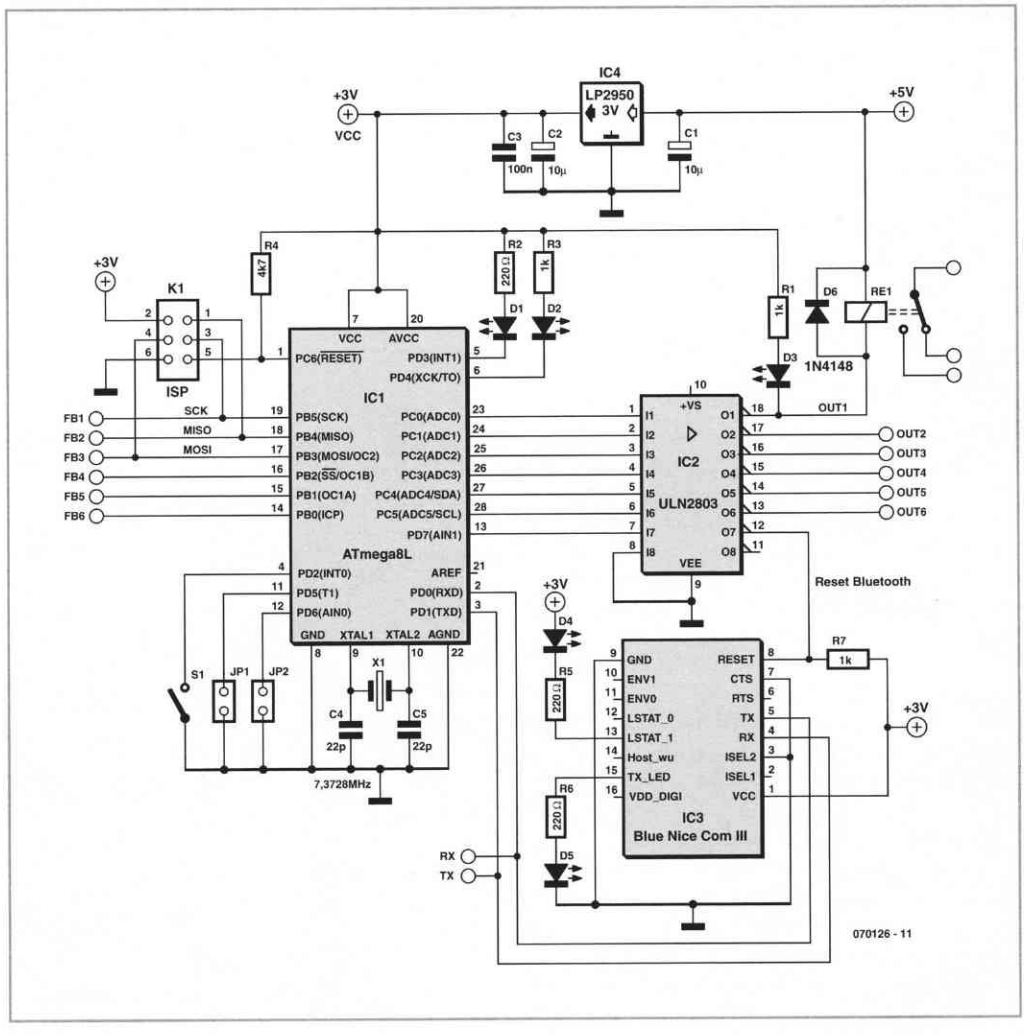

within 8 mm of the antenna; other requirements are set out in the manual for the module.

The microcontroller can be programmed using the ISP interface: you must of course make sure that the pinout of the connector is compatible with that of your programmer. Suitable programmer circuits can be found on the Internet as well as within the pages of

Weblinks

Author's website (in German):
www.clipswitch.de/avrblueremote.html
Bluetooth module information:
http://amber-wireless.de/produkte/bluetooth/deault.php?fnum=109221360256
Bluetooth module manual:
www.amberwireless.de/pdf/OPC1601_HB.pdf
LMX9820 datasheet:
www.national.com/pf/LM/LMX9820A.html
AVR programmer:
www.atmel.com/dyn/products/tools_card.asp?tool_id=2726
AVR Studio:
www.atmel.com/dyn/products/tools_card.asp?tool_id=2725

Elektor Electronics, and further information is provided on Atmel's website. The sensor inputs can be used for any desired purpose or simply left floating.

With the hardware built we next turn to the accompanying Smartphone software. You will first need to install the appropriate version of Compact Framework 2.0 (available for download from Microsoft):

- Windows Mobile 5.0 Pocket PC and Smartphone: *NETCFv2.wm.armv4i.cab*;
- Pocket PC 2003 and 2003 SE: *NETCFv2.ppc.armv4.cab*;
- Windows XP: *netcfsetupv2.msi.*

Next, copy the file avrblueremote.exe to the target platform (for example onto an SD card for use with a Smartphone). The two Bluetooth devices, the Smartphone and the receiver board, now need to be 'paired' (which only needs to be done once). The program can now be started, and the COM port set with a click or two of the mouse on the upward- and downward- pointing arrows. The central square opens the interface, creating a connection with the receiver. The arrows now allow the outputs on the receiver board to be switched on and off; the sixth output is switched by pressing the space key.

Towards the top of the display the six sensor inputs are represented as LEDs. If you should move out of range of the receiver, these LEDs will be extinguished and a timeout bar will appear. If the timeout period should expire without a valid signal being received the interface will be closed.

(070126-I)

248 New Lego Mindstorms NXT Motor Block

MISCELLANEOUS ELECTRONICS AND DESIGN IDEAS

Antoine Authier

In 2006, the Lego Mindstorms® RCX blocks became NXT blocks. They have a quite surprising avant-garde shape – in place of the traditional compact RCX block, for the NeXT generation motor the Lego engineers have opted for a 'pistol' profile.

This block comprises a motor, a rotary encoder, and a step-down gearbox. Its weight is all of 80 g!

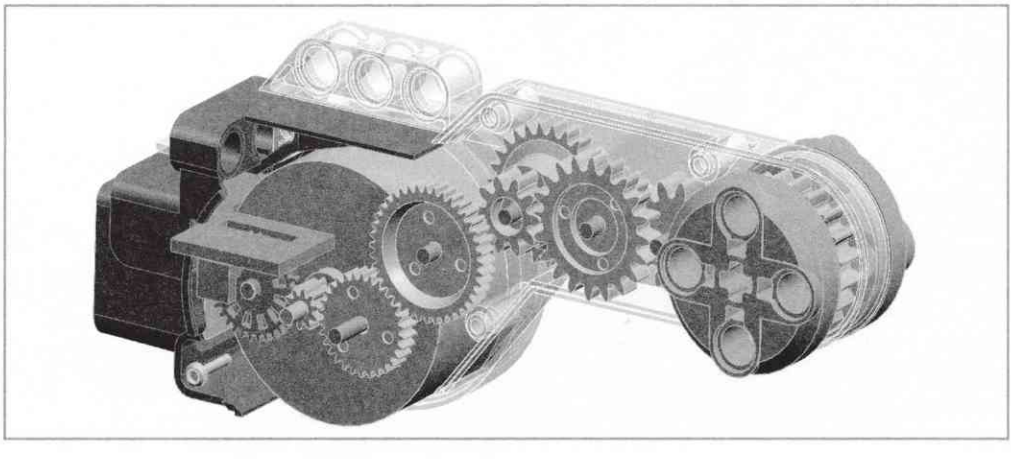

The DC motor seems to be a standard type. It is located in the larger-diameter light-grey cylindrical part, under the Lego logo. Powered from 9 V, it draws 60 mA off load with a speed of 170 rpm (360 rpm and around 3.5 mA for an RCX motor).
The internal step-down gearing increases the torque available at the output disc, which is great for power applications. On the other hand, the slower rotation will be seen as a drawback for speed applications.
The data provided by the rotary optical encoder allow the NXT unit software to determine the angle of rotation to the nearest degree. Not having dissected the block, we can only surmise how this precision is obtained from the encoding disc that only has 12 slots. The block contains two electronics assemblies: one is the module that conditions the signal from the optical detector, the other protects against potential overloads. This comprises over-current protection in the form of a resettable Polyswitch® fuse, and a 15 V surge limiter.
At one end of the block is the orange drive disc. At the other end is the RJ11 power input and data output connecter. It has a key to avoid confusion with a standard telephone cable.
Interested readers will find the characteristics and views of the innards of the block on Philo's web pages [1], [2].

(070371-I)

Web Links
Philo's NXT motor internals:
www.philohome.com/nxtmotor/nxtmotor.htm
Lego 9 V Technic Motors compared:
www.philohome.com/motors/motorcomp.htm

249 Wireless Pulse Sensor

SENSORS

For robots and other control applications

Markus Bindhammer

This pulse sensor is designed to be used for communication between man and machine, giving a robot the ability to react to the pulse rate of its human mentor. The digital output of the circuit makes it useful in other applications as well.

The sensor itself consists of an ordinary LDR (with a resistance when illuminated of 300 Ω and a dark resistance of around 10 MΩ) and a bright LED (D1). The LED must have an output of at least 1000 mcd as light from it must pass through the finger and illuminate the LDR.

Now, when the heart pumps a pulse of blood through the blood vessels, the finger becomes slightly more opaque and so less light reaches the LDR. This can be converted into an electrical pulse.

With each pulse the resistance of the LDR, and hence the voltage at the input to opamp IC1.A, changes. The gain of the opamp is set by potentiometer P1 in the feedback path. The sensitivity of the circuit can be adjusted using potentiometer P2 at the input to comparator IC1.B.

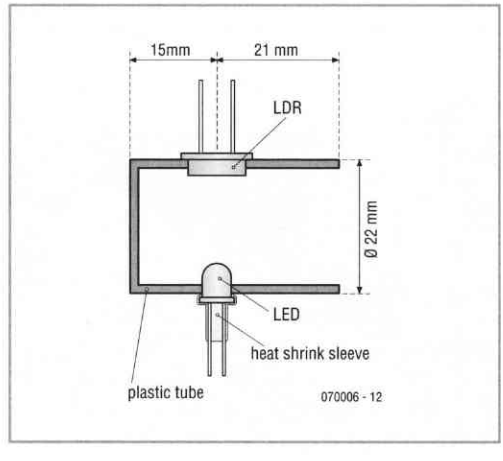

T1 forms an output driver that not only lights LED D2 to give a local indication of the detected pulse, but also powers up a standard squarewave oscillator circuit built around IC2, a 555 timer. At its output this produces a signal modulated by the pulse, with a frequency that can be set from 30 kHz to 40 kHz using potentiometer P3.

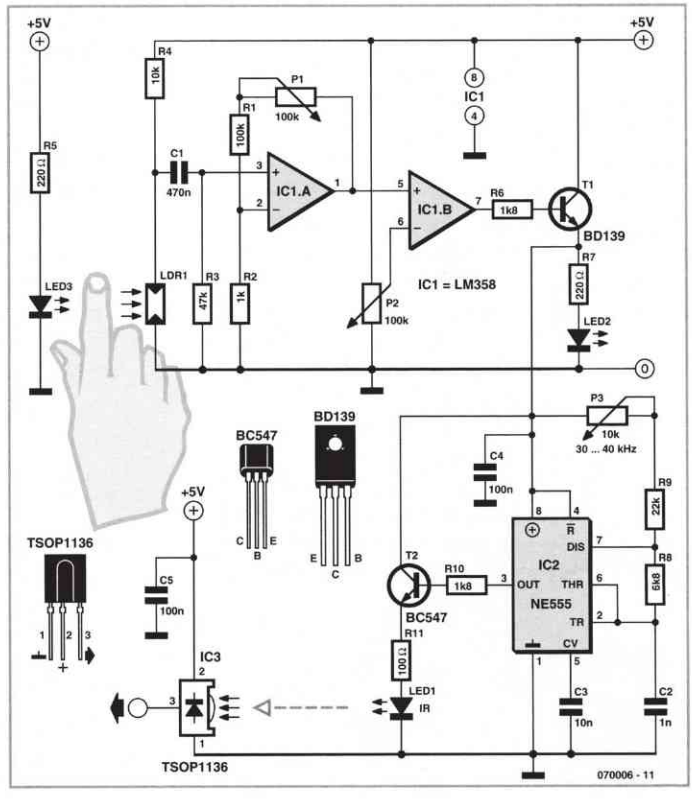

A driver stage interfaces the output of the 555 to an IR emitter diode, which can send the modulated signal to IR receiver module IC3. The more power used to drive the IR LED, the greater the range of the link: R11 can be altered to achieve the desired LED current.

The demodulated output of the receiver module can be fed directly to a microcontroller. The centre frequency of the receiver module used will determine the correct setting of P3.

A pulse sensor can be made from a simple 40 mm length of plastic tube, closed at one end, chosen to fit snugly over the fingertip. Holes to mount the LED and LDR are made 15 mm from the closed end, and the components are glued suitably into the holes so that they face towards the centre of the tube. The connecting wires are isolated from one another and the whole sensor enclosed in a length of heat-shrink tubing to exclude external light from the LDR. If this construction seems a bit bulky, it is possible to reuse a clip from a commercial heart rate monitor.

(070006-I)

250 Complete Stepper Motor Driver

ACTUATORS

Hesam Moshiri

With this circuit you can make a stepper motor do just about anything it will need to do in robotics application: rotation to the left or right, in full-step or half-step mode.

Stepper motors convert electrical pulses into mechanical movement. In applications like hard disks, printers and photocopiers (to mention but a few), stepper motors are used for rotation and/or accurate position control of mechanical assemblies. Every stepper

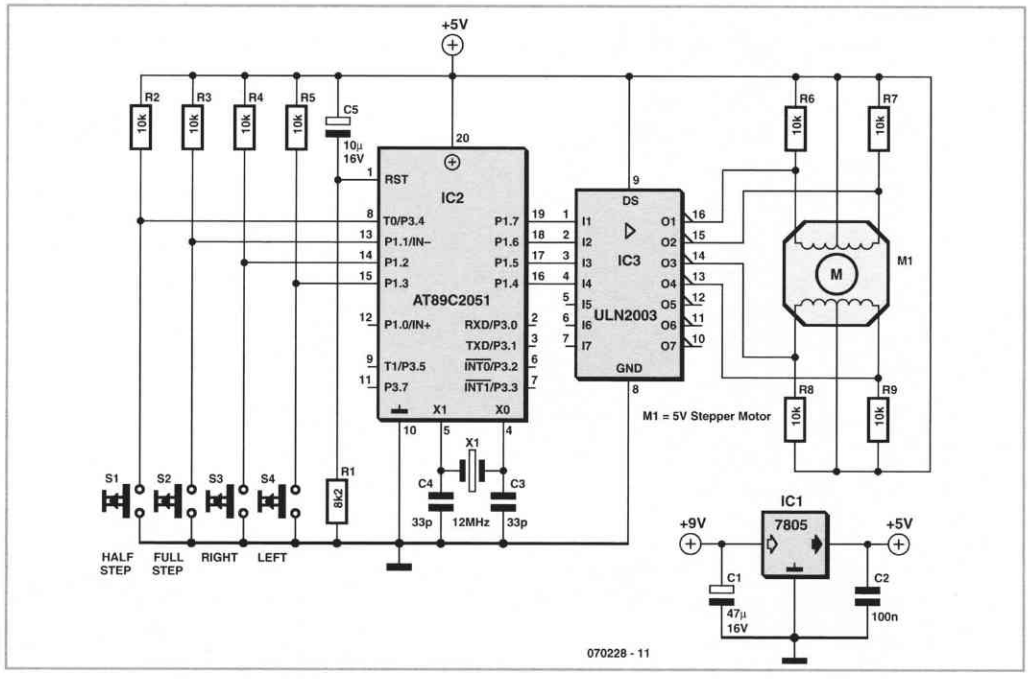

motor has one permanently magnetic axle called the rotor. This is surrounded by a fixed part called the stator. Usually, stepper motors have four stator wires with two or one common wire, which is normally connected to the positive supply voltage.

By applying a controlled sequence of pulses to the individual stator windings, the rotor will start to rotate. Stepper motors may differ in size, shape, power, supply voltage, cost, accuracy, and so on, but importantly in the number of steps that make up one complete spindle revolution. This property also determined the step angle as shown in **Table 1**.

For example for a motor specified as having a 1.8-degree angle, 360 / 1.8 = 200 pulses for a complete spindle revolution. Two pulsing schemes are available to drive the motor: 'full-step' or 'half-step'. The two modes are summarized in **Table 2** and **Table 3** respectively.

Applying half-step pulses to the motor will increase the accuracy at which the spindle can be turned. In the case of our 1.8-degree angle motor, half-step driving then requires 400 steps per revolution.

Another important advantage of half-step pulsing is more motor power, which usually translates in more torque.

Table 1

Step angle (°)	Staps per revolution
0,72	500
1,8	200
2,0	180
2,5	144
5,0	72
7,5	48
15	24

The circuit of the motor driver is designed around an Atmel microcontroller type AT89C2051 ticking at 12 MHz and one high voltage/high current Darlington transistor array type ULN2003.

The motor drive pulses generated by the microcontroller under firmware control are fed to the ULN2003 via four port lines P1.4 through P1.7. The motor's stator windings are connected to the corresponding output pins on the ULN2003. The ULN2003 can supply up to 500 mA on each output pin. Note that a 5-V stepper motor is used in this circuit.

Table 2: Full-step mode						
rotation to the right	step	winding A	winding B	winding C	winding D	rotation to the left
↑	1	1	0	0	0	↓
	2	0	1	0	0	
	3	0	0	1	0	
	4	0	0	0	1	

Tabel 3: half-step bedrijf						
rotation to the right	stap	winding A	winding B	winding C	winding D	rotation to the left
↑	1	1	0	0	0	↓
	2	1	1	0	0	
	3	0	1	0	0	
	4	0	1	1	0	
	5	0	0	1	0	
	6	0	0	1	1	
	7	0	0	0	1	
	8	1	0	0	1	

The source code file and the firmware (hex file) for the AT89 micro may be downloaded free of charge from the Elektor website as archive # 070228-11.zip.

After constructing your circuit, power it up. Press the Full Step or Half Step button. Then press Left or Right and you will see your motor start to rotate using the mode selected. You can change between full and half step at any time.
All this is based on the assumption that you have wired up your motor correctly. The AT89 source code contains a number of directions to help you 'change wires' in software rather than by soldering and getting confused by the different wire colours.

In practice, you will notice that full-step mode yields higher spindle speed with low motor torque, whereas half-step mode is good for increased torque and accuracy, at the cost of speed. That is why stepper motors powering wheels etc. are controlled such that they start and end their operation in half-step mode, with full step mode in between to achieve maximum speed.

(070228-I)

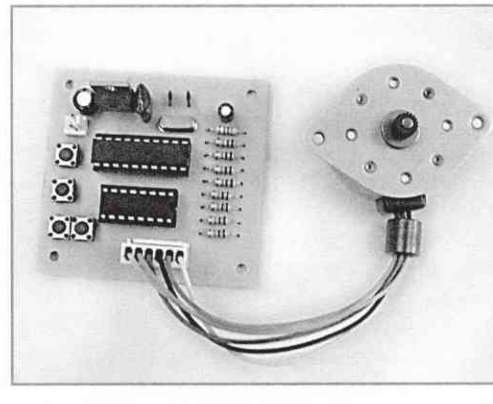

251 LPC900 Programmer

MICROCONTROLLERS

Jürgen Wickenhäuser

The LPC900 family is the Swiss Army knife of 8051-compatible microcontrollers. The 'LPC' in the part number stands for 'low pin count': the NXP (formerly Philips) LPC900 family [1] consists of a range of small and easy-to-use microcontrollers ideal for small-scale high-

speed applications. Since the LPC900 family is based on an 8051 core it is easy to learn how to use the devices.

However, the LPC900 is more than just a slightly spruced-up version of the 8051. The most important features are as follows:

- 2-cycle high-speed 8051 core (six times as fast as a standard 8051);
- from 1 kB to 16 kB of flash memory with full ISP and IAP functionality;
- internal precision 7.3728 MHz RC oscillator, ideal for baud rate generation up to 115 kbaud without an external crystal;
- CPUs available in DIL as well as tiny SMD (TSSOP) packages;
- a minimum system requires a single capacitor as the only external component;
- wide range of on-chip peripherals: brown-out detector, watchdog timer, comparators, A/D converter;
- operating voltage 2.4 V to 3.6 V.

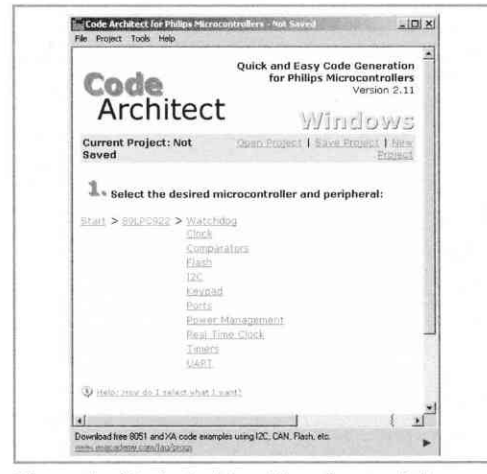

Figure 1 *'Code Architect' is a free tool that makes using the LPC900 microcontroller very straightforward.*

The only significant difference from the standard 8051 is the improved I/O structure: they can now also work in a CMOScompatible

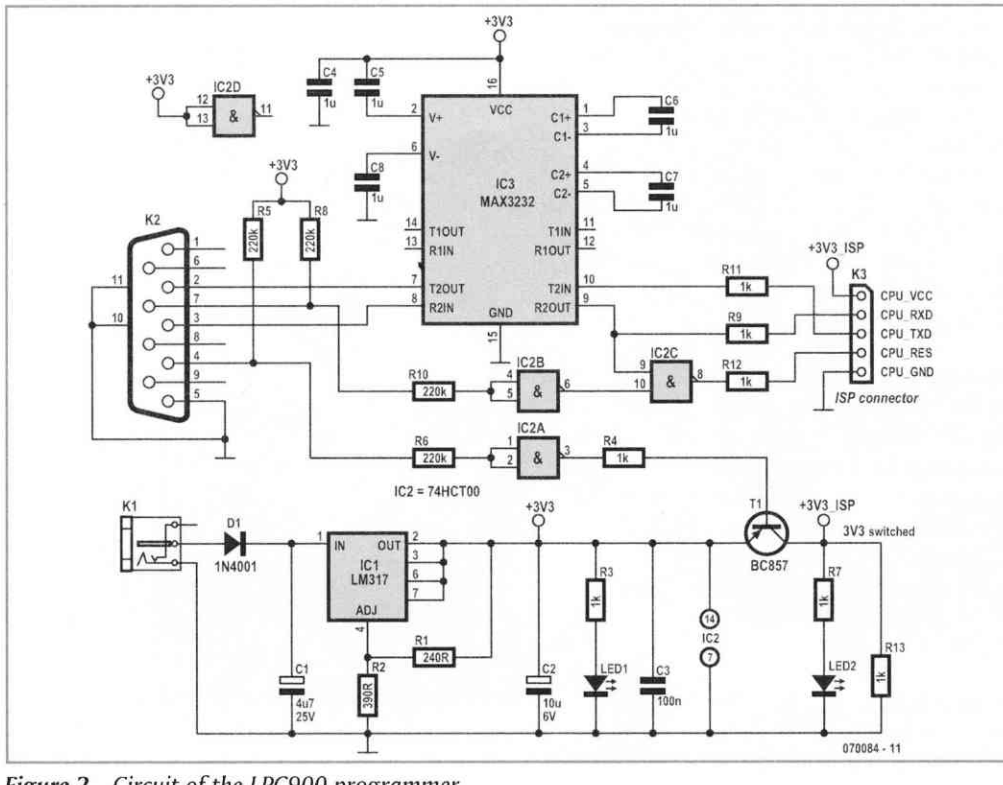

Figure 2 *Circuit of the LPC900 programmer.*

mode, which brings many advantages. One important point to note in this regard is than on reset the ports are set to CMOS input mode, and must if necessary be suitably initialised before use.
Otherwise the LPC900 is very easy to use. The datasheet is rendered almost superfluous by the free 'Code Architect' software by Embedded Systems Academy [2]. This tool is capable of creating snippets of C source code directly (see **Figure 1**).

Loading code into the LPC900 microcontroller proceeds with a minimum of fuss. When the CPU receives a series of three pulses on its reset pin within a specified time window of being powered up, the CPU jumps to a bootloader, which then proceeds to communicate using the RXD and TXD signals. After code is downloaded these three signals are of course available for their normal use. A fiveway cable is required for download.
The hardware required is minimal, as the circuit in **Figure 2** shows. This circuit is capable of supplying the LPC with power and also provides an RS-232 interface, ideal for use with a terminal program. The printed circuit board for the design is shown in **Figure 3**.

Operation is straightforward. The CPU can be powered up and down using the DTR signal. The RTS signal

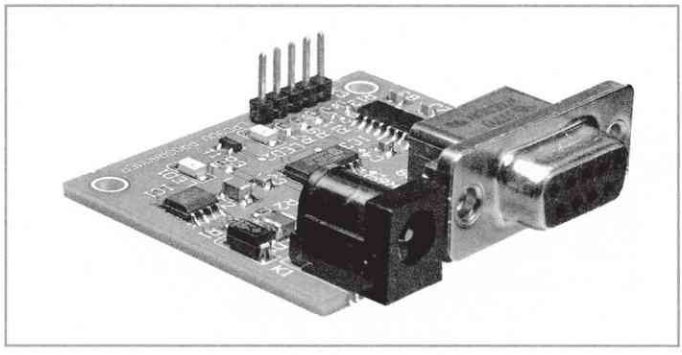

COMPONENTS LIST

Resistors
R1 = 240 Ω SMD (0805)
R2 = 390 Ω SMD (0805)
R3, R4, R7, R9, R11, R12, R13 = 1 kΩ SMD (0805)
R5, R6, R8, R10 = 220 kΩ SMD (0805)

Capacitors
C1 = 4μF7 25V SMD (1206 or 1210)
C2 = 10 μF 6V SMD (1206 or 1210)
C3 = 100 nF SMD (0805)
C4, C5, C6, C7, C8 = 1 μF SMD (0805)

Semiconductors
D1 = GF1M
T1 = BC857 SMD (SOT23)
LED1, LED2 = LED, red, SMD (0805)
IC1 = LM317 SMD (SO8)
IC2 = 74HCT00 SMD (SO14)
IC3 = MAX3232 (SO16)

Miscellaneous
K1 = mains adaptor socket for PCB mounting
K2 = 9-way sub-D socket, angled, PCB mount
K3 = 5-way SIL pinheader
PCB, ref. 070084-1, from *www.thepcbshop.com*

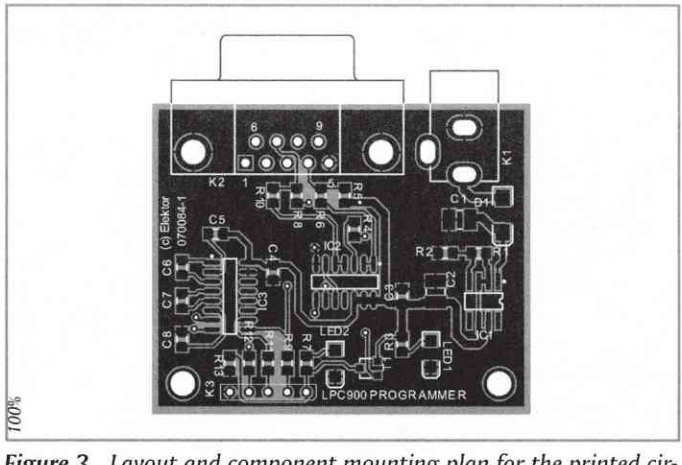

Figure 3 Layout and component mounting plan for the printed circuit board.

functions as a switch: if RTS is active then signals from RXD are also presented to the reset pin of the CPU, and can thus be used to activate the bootloader. Note that R13 ensures that the supply voltage to the target hardware drops rapidly when it is switched off. It is advisable to limit the capacitance on the 3.3 V rail in the target hardware to approximately 10 μF, since otherwise the microcontroller being programmed might not correctly execute a power-on reset.

The free program 'Flash Magic', also from Embedded Systems Academy, can be used to simplify programming the devices. This will be familiar to Elektor readers from the RFID reader project [3]. This tool also includes a suitable terminal program.



Figure 4 Initialisation specific to the LPC900 requires just five instructions.

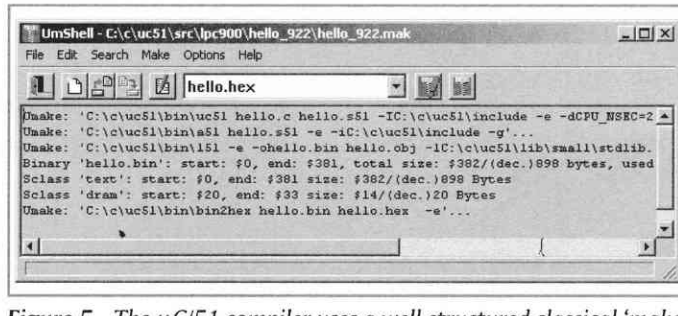

Figure 5 The µC/51 compiler uses a well-structured classical 'make' system.

An optimising C compiler is also needed to write programs for the LPC900 family. There are various commercial products available; here we will briefly discuss how to use μC/51 [4]. For practically all LPC900 family devices the free demonstration version of the compiler is entirely adequate. The only restriction of the free version is the 8 kB code size limit, but this is already enough to write very complex applications for an 8051-compatible microcontroller, because the compiler produces very compact code.

In particular, the compiler is very parsimonious with the limited internal RAM in the microcontroller, using a graph-based optimisation algorithm to enable multiple re-use of memory areas.

For example, even with this very tiny CPU we have a fully-featured 'printf()' function call. The system also includes a reliable and comprehensive floating-point library.

The μC/51 system was developed as a tool for the company Geo-Precision [5], and has been used and maintained there for years. The software tools work very well together and make development very quick: there are just three steps from source code to working program. For demonstration purposes we used an 89LPC922 with an LED connected to port pin

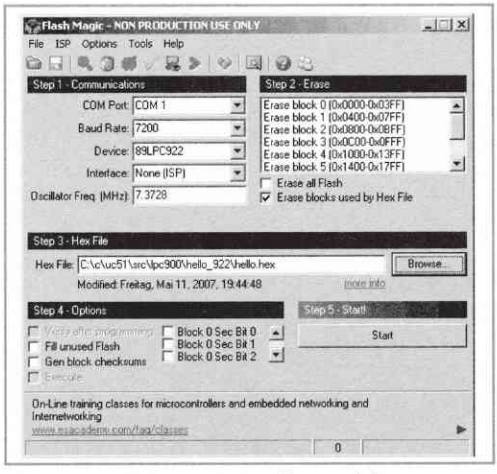

Figure 6 *Flash Magic is a free tool for programming LPC microcontrollers.*

P1.7. The listing shown (**Figure 4**) is an example project included with μC/51 since version 1.20.06. As can be seen from **Figure 5**, the compiler uses a well-structured classical 'make' system.

Downloading a program to the microcontroller is an intuitive operation (**Figure 6**). It is recommended that you configure the terminal program embedded within 'Flash Magic' so that it is launched immediately the application is started on the LPC. Note in particular

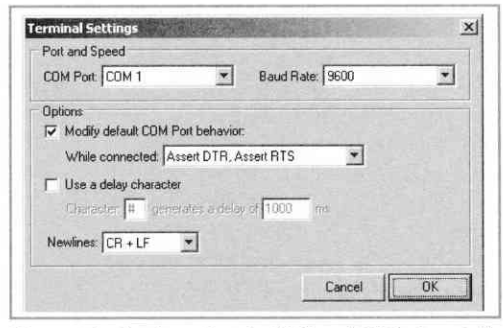

Figure 7 *Settings for the RTS and DTR signals in the Flash Magic terminal program.*

References and links

[1] *www.standardics.nxp.com/products/lpc900* (NXP, manufacturer of the LPC900)
[2] *www.esacademy.com* (Embedded Systems Academy: Flash Magic, Code Architect)
[3] Elektor-RFID Reader (using an LPC936), Elektor Electronics, Sept. 2006, page 26
[4] *www.wickenhaeuser.de* (compiler, demonstration version)
[5] *www.geo-precision.de* (geotechnical research and development)

that the RTS and DTR signals must be correctly configured (both active): see **Figure 7**.

(070084-I)

252 LDO Regulator with Soft Start or Tracking

POWER SUPPLIES, BATTERIES AND CHARGERS

Dirk Gehrke
(Texas Instruments Germany)

The devices described here are tailored to fit the needs of modern DSPs, processors and FPGAs that require low supply voltages at relatively high currents, plus the capability of supply voltage ramp-up and sequencing in a defined manner.
The latter two requirements are not easily solved using discrete components. The TPS74x01 family fits the bill.

At the time of writing the family consists of three parts, called TPS74201 (1.5 A with soft-start), TPS74301 (1.5 A with tracking) and TPS74401 (3 A with soft-start). The family is expected to grow soon.

Figure 1 shows a simplified connection diagram for the three devices. These regulators require a low power bias voltage, V_{BIAS}, and a power input voltage, V_{IN}, from which V_{out} will be derived. All three regulators are capable of providing output voltages down to 0.8 V and

the device in the QFN package also includes an integrated supervisory circuit with open/drain output that goes to high impedance when the output voltage reaches regulation ('power good' or PG).
The TPS74301 can provide up to 1.5 A output current and has a TRACK pin which allows the user to input a ramp signal for the output voltage to follow, effectively implementing either simultaneous or ratiometric sequencing. The relevant connections are shown separately. The TPS74201 and TPS74401 can provide up to 1.5 A and 3.0 A DC current, respectively, and have an SS pin which allows the user to set the linear ramp rate of the output voltage.
For the TPS74301, the value of R4 (in a voltage divider)

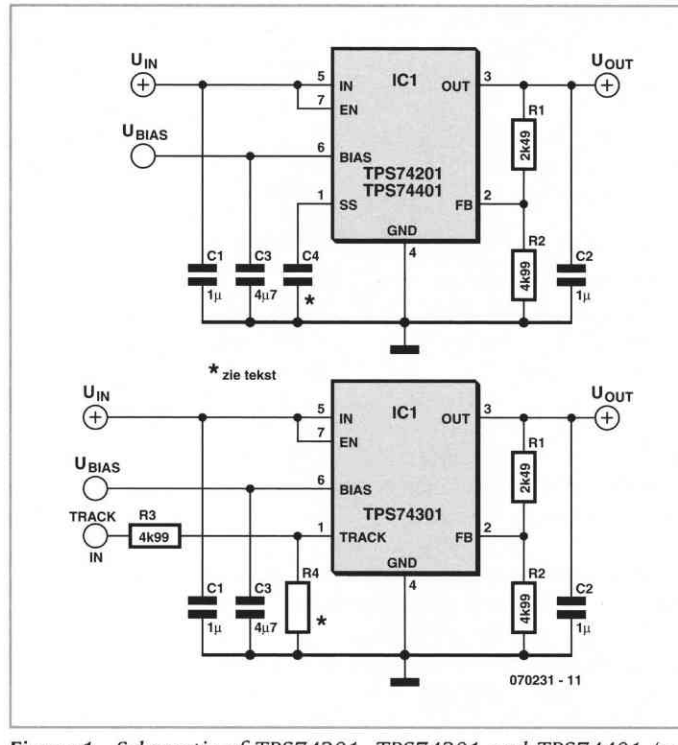

Figure 1 Schematic of TPS74201, TPS74301 and TPS74401 (see text for values of R4 and C4).

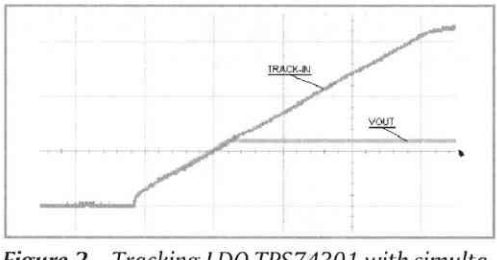

Figure 2 Tracking LDO TPS74301 with simultaneous startup (R4 = 10kΩ).
Timebase: 2 mV/div.

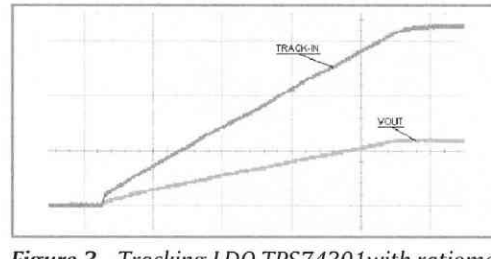

Figure 3 Tracking LDO TPS74301with ratiometric startup (R4 = 1.78kΩ).
Timebase: 2 mV/div.

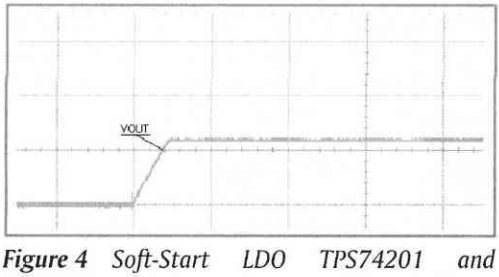

Figure 4 Soft-Start LDO TPS74201 and TPS74401 with 1ms soft startup (C4 = 1nF).
Timebase: 2 mV/div.

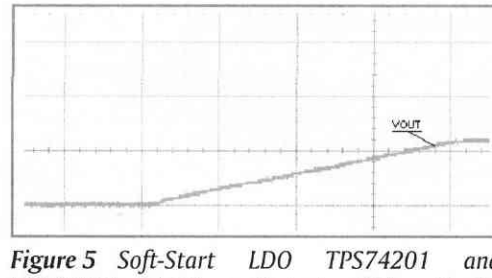

Figure 5 Soft-Start LDO TPS74201 and TPS74401 with 10ms soft startup (C4 = 10nF).
Timebase: 2 mV/div.

allows the user to select either simultaneous or ratiometric sequencing.

R4's value is calculated from the equations in the datasheet, assuming an external 3.3-V ramp signal is applied to the TRACK IN pin. When the value of R4 selected to be 10 kΩ in this particular example, the output of the TPS74301 will follow the external ramp signal within a few millivolts until the TPS74301 reaches its regulated voltage. This is called *Simultaneous Sequencing* (**Figure 2**). The TPS74301 output voltage will have the same rate of rise (dv/dt) as the external ramp signal but a different soft-start time.

Changing resistor R4 to a value of 1.78 kΩ results in the TPS74301 output voltage reaching its regulated voltage at the same time the externally applied tracking signal reaches its maximum voltage (e.g., 3.3 V). This is called *Ratiometric Sequencing* (**Figure 3**).

Although the external ramp signal and the TPS74301 will have different rates of rise, they will have the same softstart time.

Literature

TPS74401 3.0A Ultra-Low Dropout Linear Regulator,
Texas Instruments Literature # SBVS066C
TPS74301 1.5A Ultra-Low Dropout Linear Regulator with Programmable Sequencing,
Texas Instruments Literature # SBVS065C
TPS74201 1.5A LDO with Programmable Soft-Start,
Texas Instruments Literature # SBVS064C
TPS74x01EVM-118 User's Guide,
Texas Instruments Literature # SLVU143
Sequencing Power Supplies in Multiple Voltage Rail Environments, by David Daniels, Dirk Gehrke and Mike Segal,
Texas Instruments Literature # SLUP228
or *http://focus.ti.com/lit/ml/slup228/slup228.pdf*

For the TPS74201 and TPS74401 the capacitor value can be used to program the soft-start ramp.
In this example, values of 1 nF and 10 nF for C4 were used to realize ramps with 1 ms and 10 ms rise time respectively (**Figures 4** and **5** respectively).

With no capacitor attached to this pin the default soft-start time will be 500 μs. This 500-μs start up time is also valid for the TPS74301 when applying a voltage greater than 800 mV to the TRACK pin.

(070231-I)

253 Hunter

MECHANICS

Abraham Vreugdenhil

Four-footed walking robots occupy a special place in the gamut of DIY robots. Walking on four legs has always been a challenge. Building these robots thus creates a strong feeling of satisfaction.

Bedsides the choice of this form of locomotion, you have to select the sensors you want to fit to your robot so it can explore its surroundings. In this case, we selected feelers for short-distance sensing in order to avoid objects. In addition, the robot will be able to detect moving warm objects, such as people and animals, at a greater distance using a passive infrared (PIR) sensor.

The choice of microcontroller is also important in designing a robot. It must have an adequate number of I/O lines and sufficient memory capacity. In addition, you have to

weigh the cost against the desired functions (which means behaviour).

Behaviour is one of the most important parameters. It determines how the robot will respond to the information it receives from the various sensors.

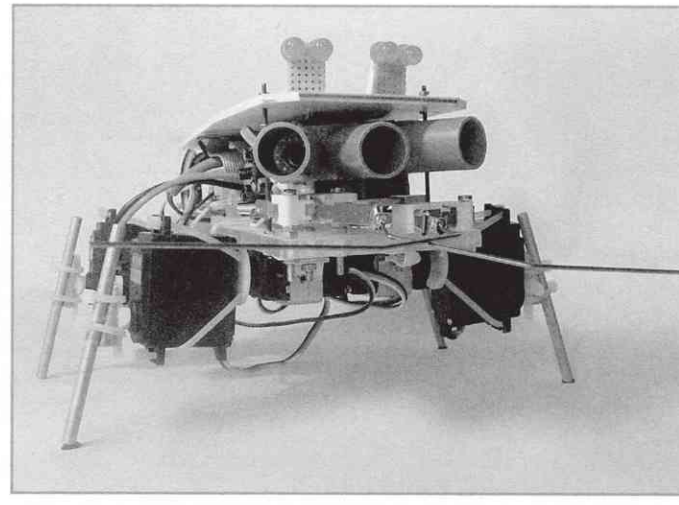

Servo legs

Developing a nice mechanical design for the legs is a difficult task. There are many conceivable possibilities using rods and levers,

1

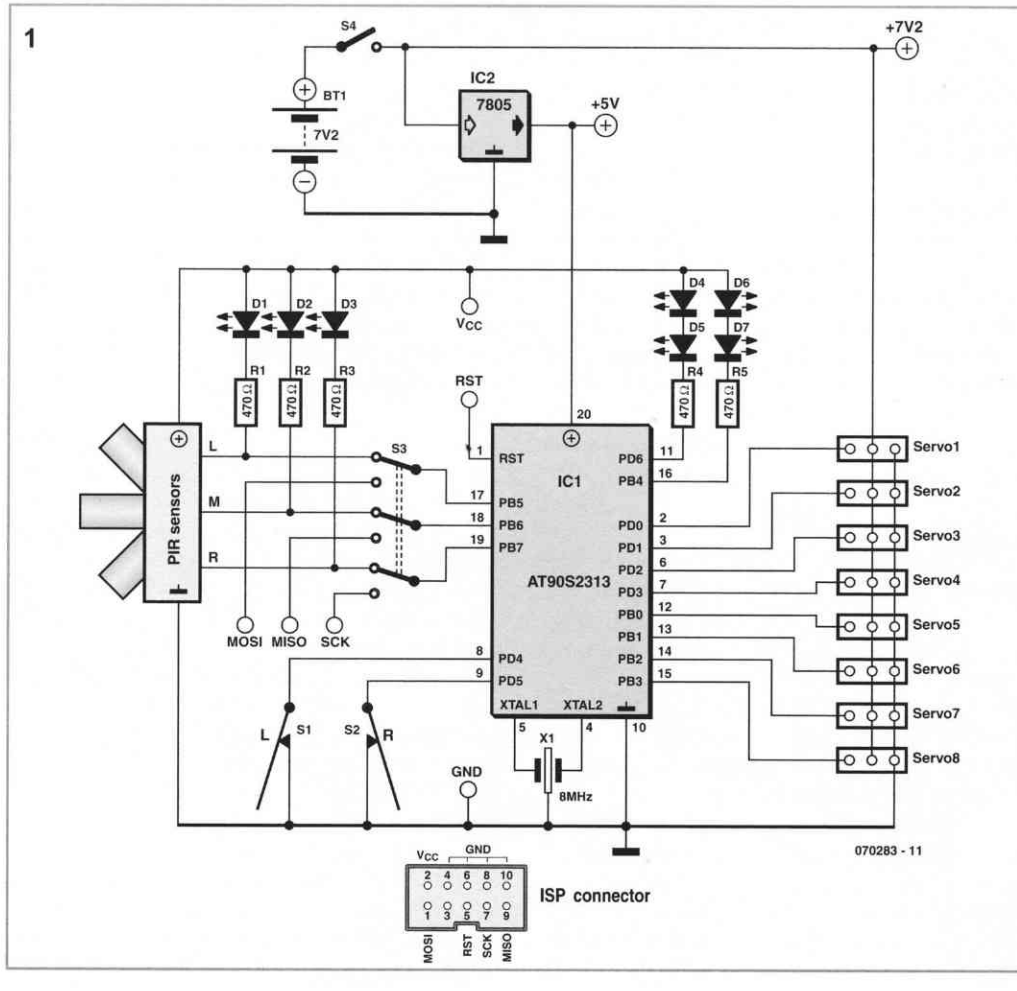

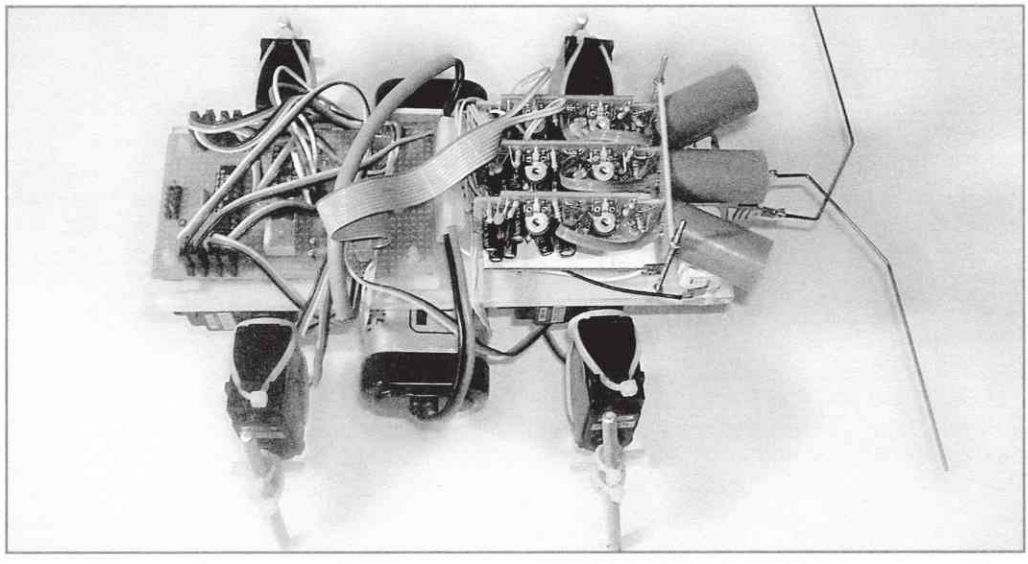

each of which has its specific advantages and disadvantages. In this case, we decided to use a very simple design.

Two servos are strapped together using cable ties. The housing of one servo is secured to a Plexiglas base plate, and an aluminium rod with a diameter of 6 mm is fitted to the shaft of the other servo. The first servo acts as a hip joint, while the other one acts as a knee joint. All four legs are build using this construction.

If you look at the walking motion of a human leg, you see than the knee joint cannot bend any further forward than the fully extended state. The knee can bend backward much further, up to nearly 180 degrees. By contrast, the hip joint can bend forward as well as backward. The servos are fitted such that the legs of the robot have the same freedom of motion.

The walking motion of each leg is divided into 28 steps. The leg moves backward slowly in 22 steps, and then forward quickly in 6 steps. The positions of the knee and hip servos corresponding to these 28 steps are stored in a table. By operating the servos at a fixed interval using the values from this series of numbers, we obtain a nice walking motion of the leg. The servos on the other side of the robot's body must be inverted, since otherwise these legs would walk backward.
There are four legs, and the number of steps per leg is 28. In order to obtain a stable walking motion, the standard offset between the four legs is set to seven positions in the series of numbers (e.g. left front 1, right rear 8, right front 15, and left rear 22).
To enable the robot to turn, we retard the motion of the two left legs and advance the motion of the two right legs.

When the robot is walking, all 28 steps of the walking motion are always executed before the sensor information is examined again, which means a complete stepping motion of the legs is executed each time.
This simplifies the structure of the software and ensures that the legs are always in the same state when a new decision regarding the walking direction must be taken. The feelers have sufficient range of motion that the robot can still manage to move after a full step has been completed.

Feelers

Two simple microswitches are used for the feelers (i.e., antennae or whiskers). A steel wire (bicycle spoke) is attached to each of the microswitches. A sliding clip is fitted to the spoke and then slid over the microswitch.

Two nuts are fitted underneath one of the switches so it is not at the same height as the other one. Otherwise the two feelers would interfere with each other too much. The feelers are connected between two microcontroller input pins and ground. No pull-up resistor is necessary, since the microcontroller has built-in resistors. The feeler switches are closed when they are not activated.

Eyes

The eyes of this robot do not function as sensors. They are purely decorative. The eyes consist of two 8-mm red LEDs connected in series. They are powered from the 5-V supply via a 150-Ω current-limiting resistor, and they are connected to an output line of the microcontroller. The eyes switch from on to off after each step, but they remain in a fixed state while the robot is moving backwards or turning, depending on the motion that is being performed.

PIR sensor

Various models of PIR are available commercially, such as the Eltec 422 from Acroname. The main disadvantage of this model is its price. There's also the HI-859 from Conrad. Its disadvantage is its inconvenient electrical interface. The signal from this sensor must first be amplified before it can be used.

As an alternative, we selected a wellknown sensor that is relatively inexpensive: a motion detector available in DIY home improvement shops for less than £ 10.

The first thing to do is to remove the PCB with the sensor from the motion detector, after which you can fit the sensor to a separate PCB. Three sensors are placed next to each other so the total field of view can be divided into different regions. This yields more information that can be used to influence the robot's behaviour. The circuit boards for the sensor elements are still useful. They hold all the electronics necessary to generate a digital signal at the output. All of this for less than 10 quid per sensor element!

In principle, each of the sensor elements has a detection field of view of 140 degrees. In practice, the angle is larger than this due to reflections and the like. Collimation and screening by means of pieces of electrical conduit with a length of 2 to 3 cm is thus not a bad idea.

If the sensors are arranged so their fields of view overlap, we can distinguish five sensor regions.

To make the activity of the PIR sensors visible, a LED is connected to the output of each PIR sensor. These LEDs are connected to the 5-V supply via resistors. The LED is on if the PIR sensor does not detect anything, and it switches off if the associated PIR sensor detects a moving warm object.

Microcontroller and compiler

The selected microcontroller is an Atmel AT90S2313 (see the schematic diagram in **Figure 1**).

It has 2 kB of program memory, which provides plenty of room to program intelligent behaviour. The AT90S2313 has 15 I/O pins, of which three can be used for ISP. An ISP port is quite handy during testing and in case of future software extensions. This port is fitted to the robot using a 10-way CANDA connector. You can program the device using the Sample

AT90S2313 pin assignments

Pin	Function	Connection
2	PD0	Left front leg hip
3	PD1	Left front leg knee
6	PD2	Left rear leg hip
7	PD3	Left rear leg knee
8	PD4	Left feeler
9	PD5	Right feeler
11	PD6	Right eye
12	PB0	Right front leg hip
13	PB1	Right front leg knee
14	PB2	Right rear leg hip
15	PB3	Right rear leg knee
16	PB4	Left eye
17	PB5 – MOSI	Left PIR sensor / ISP via jumper
18	PB6 – MISO	Middle PIR sensor / ISP via jumper
19	PB7 – SCK	Right PIR sensor / ISP via jumper

Electronics Programmer [1], among other options. Only three resistors are necessary to connect a printer port to this port.

Quite a few I/O lines are necessary for controlling the hardware, which comprises eight servos, two feelers, two LEDs, and three PIR sensors. This makes a total of 15 devices. For this reason, the three PIR sensors are connected to the robot in parallel with the ISP port via jumpers. In normal operation, the PIR sensors are connected to the robot. If a new program must be downloaded to the robot, the jumpers must be switched over to make the ISP port available.

The robot software was programmed in Basic and compiled using BASCOM-AVR [2]. This an excellent compiler for Atmel AVR microcontrollers. The freeware version of BASCOM-AVR can easily handle the 2-kB program capacity of the AT90S2313.
The software for the Hunter can be downloaded free of charge from the Elektor website as item no. 070283-11.zip.

Power supply

The robot is powered by a 7.2-V rechargeable battery of the type used in models. An on/off switch is fitted to the battery. A regulated 5-V supply voltage for the electronics is generated by a an old friend in this area: a 7805 in a TO220 package. The servos are powered directly from the battery via the switch.

Behaviour

The name of the robot says a lot about its behaviour. It hunts for something. Its job is to detect and follow warm moving targets, such as people and animals. As long as the robot can see something, it will pursue it. If it can't see anything, it advances by five steps in the hope of seeing something. After these five steps it remains standing and waits for new prey. The behavioural rules can be summarised as follows:

1 If nothing is detected, do nothing (sight = 1)
2 If sight > 1, take one step (sight = sight – 1)
3 Check for obstacles after each step. If an obstacle is detected, walk backward and then turn away from the obstacle (sight = 6)
4 If sight < 5, check the PIR sensors. If something is detected, turn in the direction of the detected object. The options for the turning direction are: left, forward left, straight ahead (no turn, with sight = 6), forward right, and right (sight = 6)

Conclusion

The objective was to build a four-legged robot with interesting behaviour. This objective was ultimately achieved, and with a reasonably limited budget. The microcontroller memory is pretty well filled by the current software, but it would still be possible to devise a more efficient behaviour algorithm. This means that there are plenty of options for experimenting with this robot. Thanks to the onboard ISP port, programming the robot is easy. This robot is a means, not an end. Let's hunt!

(070283-I)

Web Links
[1] *http://avrhelp.mcselec.com/Sample_Electronics_cable_programmer.html*
[2] *www.mcselec.com*

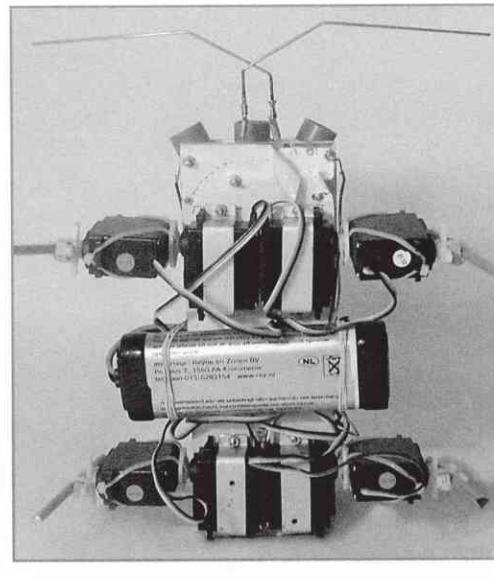

254 2.4 GHz Antenna for Robotics Vehicles

COMMUNICATIONS

Ragnar Jensen

Radio equipment using the license-free 2.4-GHz ISM (industrial/scientific/medical) band is also rife among robotics fans, just think of what you can do with Bluetooth, wireless cameras, remote control, or even a WLAN client or access point fitted on a robot vehicle!

Point is, such homebrew applications typically require an antenna that's (1) omnidirectional, (2) 'sort of' flexible in view of the damage and bashing it may have to take and (3) low2 cost.

The antenna shown here fulfills all three requirements brilliantly. See for yourself, the pictures say more than 1 kwords.

You will need:

- a short piece of 50-Ω coax cable like RG58(C)U with a crimpedon BNC plug ('borrow' a cable from the IT dept.);
- a sharp (hobby) knife;
- a pointed tool like a strong needle or a watchmaker's screwdriver;
- a ruler;
- a soldering iron (optional);
- a hot glue gun;
- common sense and about 30 minutes of your time.

Here goes.

reproduced with modifications and extensions from CQ-TV issue 217 (070142-I)

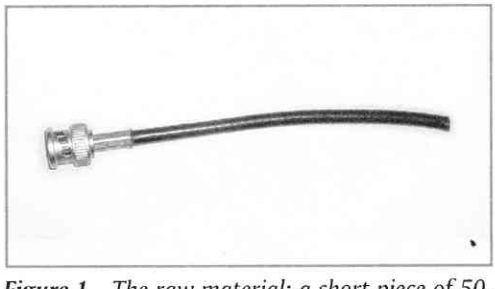

Figure 1 *The raw material: a short piece of 50-Ω coax cable.*

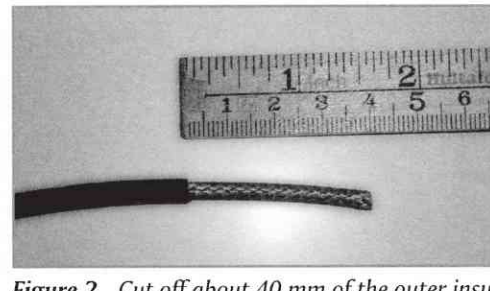

Figure 2 *Cut off about 40 mm of the outer insulation. This will expose the braid that forms the cable shield.*

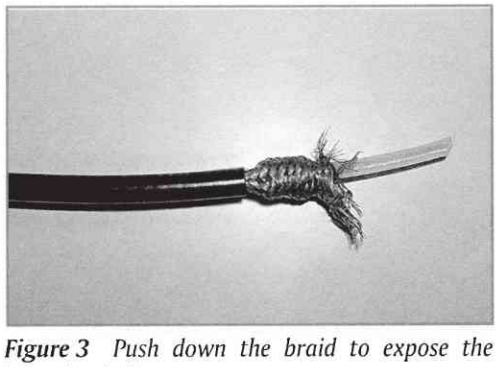

Figure 3 *Push down the braid to expose the inner insulation.*

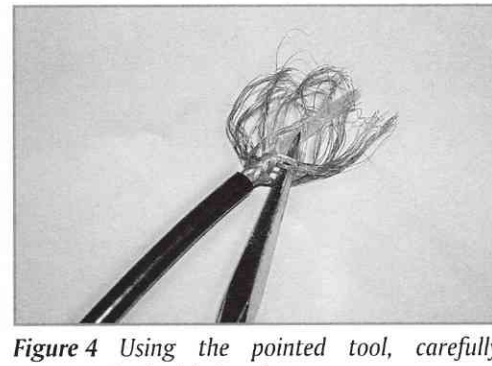

Figure 4 *Using the pointed tool, carefully unweave the braid strands.*

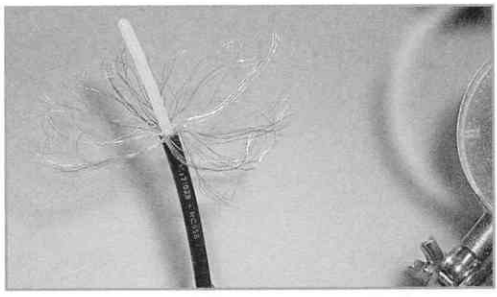

Figure 5 *Until your hairdressing looks something like this...*

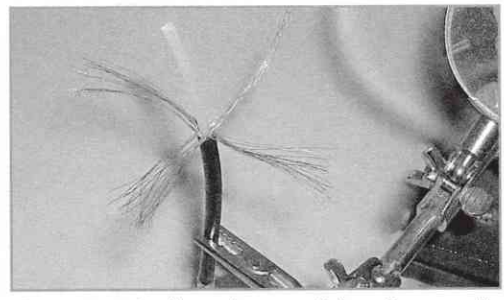

Figure 6 *Distribute the strands into four equally sized and likewise spaced bundles (wow, tresses!).*

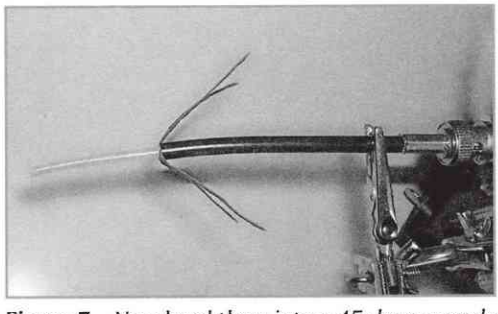

Figure 7 *Now bend them into a 45-degree angle with respect to the cable. This angle will result in an antenna impedance of about 50 Ω.*

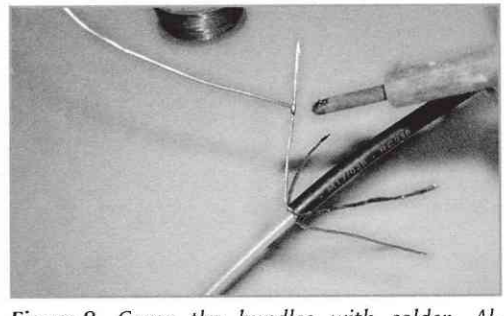

Figure 8 *Cover the bundles with solder. Although this step is optional, it does enable the ground plane elements to hold their shape better, and prevents untwisting of the strands.*

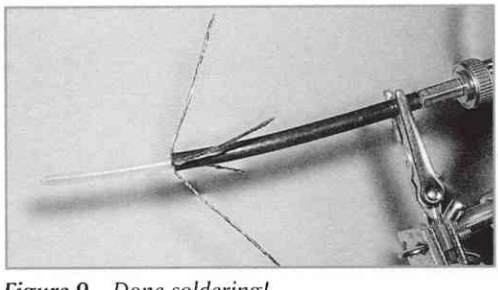

Figure 9 *Done soldering!*

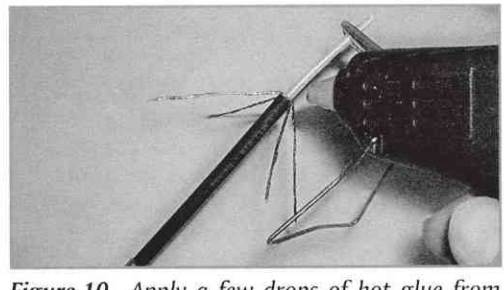

Figure 10 *Apply a few drops of hot glue from the glue gun...*

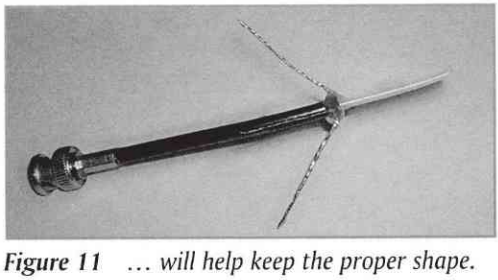

Figure 11 *... will help keep the proper shape.*

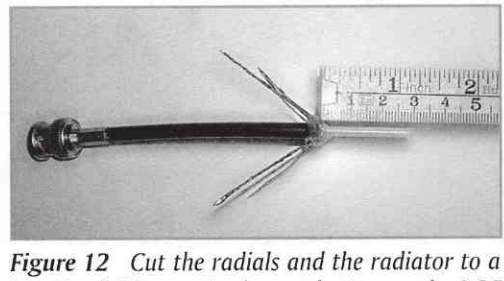

Figure 12 *Cut the radials and the radiator to a length of 30 mm (and yes, that's exactly 0.25 lambda).*

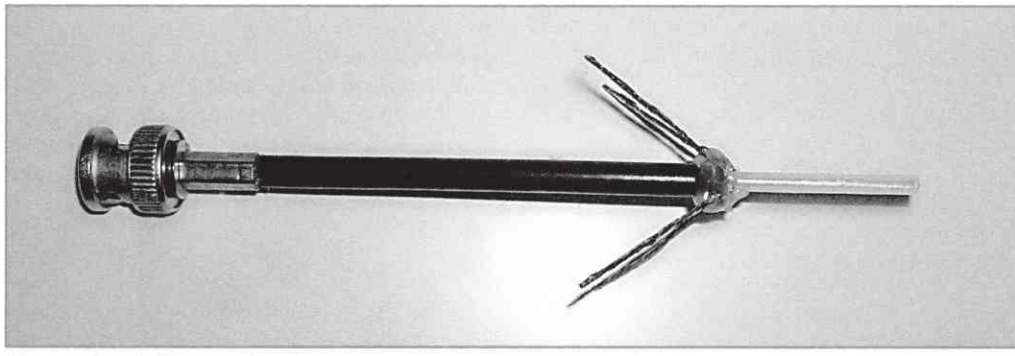

Figure 13 *And we are done!*

255 Colour Tamer

MISCELLANEOUS ELECTRONICS AND DESIGN IDEAS

RGB LED adjustment

Nivard van de Boogaard

With this simple circuit you can easily control the three LEDs in an RGB LED. Each time switch S1 is pushed we increase the (digital) value at the output of the counter-IC, IC1, an HCT7493. So, with each button push, a different LED or combination of LEDs lights up; or, in the case of an RGB-LED, the LED produces a different colour each time. After the highest value the counter will start from the beginning again. In this way all colour combinations will have their turn and there is also no need to build a separate resetfacility. Nice to embellish a robot with, but it also gives a nice effect for a modded PC.

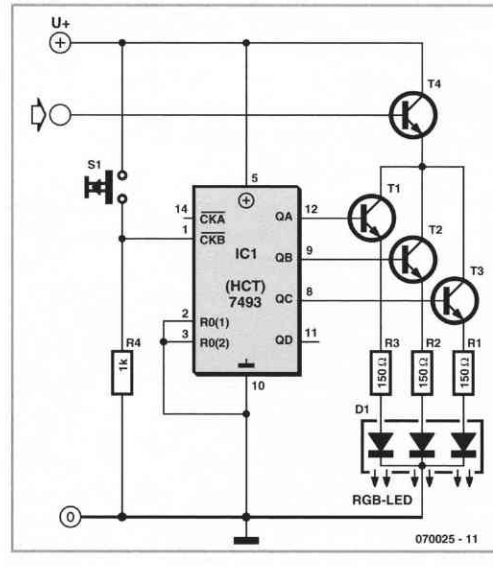

To prevent the outputs of IC1 from being overloaded, we have added T1 through to T3. As soon as an output from the counter-IC becomes active (high), it turns the corresponding transistor on and current will flow though the LED. To limit the current through the LEDs we deployed R1 to R3.
The type of transistor that is used for T1 to T3 is not very critical. Standard LEDs require relatively little current, about 20 mA. A BC337 will therefore work fine, as will a BC547.

The power supply to the LEDs can be switched off with T4. This is handy when, for example, the circuit is built into a PC. As long is IC1 remains powered it will remember its counter value and therefore also the corresponding colour setting of the LEDs or RGB-LED. In this way it is not necessary to adjust the colour every time the PC is switched on. T4 needs to be able to handle more current then T1, T2 and T3, but even a BC847 with its

100 mA maximum collector current rating is still below the limit with three LEDs.

We use R4 to define the logic level (low) on the clock input when the switch is open.

The HCT7493 is a 4-bit binary ripple counter, which internally consists of four master-slave flipflops that form a divide-by-two and a divide-by-eight. RO(0) and RO(1) can be used to reset these two sections. We don't need the reset function for this application so we connected RO(0) and RO(1) to ground to prevent unwanted behaviour. If need be, the clock input \CKA could be connected to the power supply rail to make this input insensitive to noise.

(070025-I))

256 A Robot that won't Lose its Bearings

SENSORS

C. Tavernier

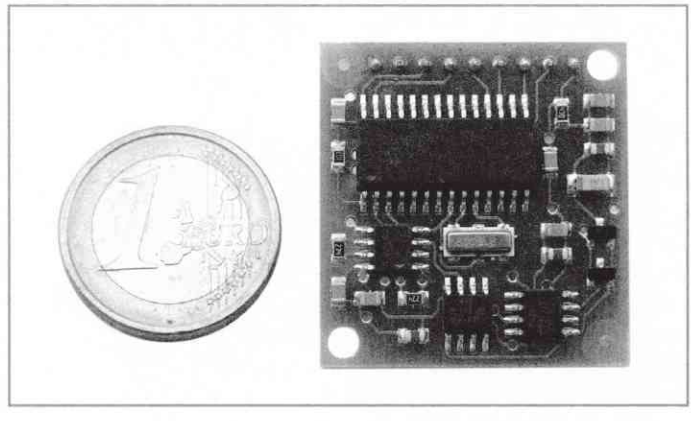

Creating a robot capable of following an exact course without needing any external physical help – like a line marked on the ground, for example – has for a long time been a very tricky operation to achieve.
Thanks to the boom in amateur robotics on the one hand, and to the development of new sensors on the other, it is today possible to make robots with functions that only a few years ago would have seemed more like science fiction. And this is just what we're proposing now, with the construction of a robot capable of detecting terrestrial magnetic North, and hence to follow any angular direction with respect to that, exactly as you would find your bearings using a compass. To do this, it uses a successor to the good old needle compass, in the form of a module made by Devantech called a CMP03 (or CMPS03, depending on versions and documents).
This module, supplied in the form of a small, ready-to-use PCB as shown in the photo, contains two Philips KMZ51 magnetic field sensors mounted at right angles, with their output signals processed by a suitably-programmed PIC16F872 microcontroller. It is capable of delivering angular position information with respect to terrestrial magnetic North with an accuracy of up to a 1/10°.
This information is available in the form of a PWM signal where the width of the pulses represents this angle, though in this case the resolution is only 1°. It is also available via an I^2C bus that, depending on which register is read in the module, can make this angle available in the form of a 16-bit word, offering a precision of 0.1°.

If a robot is fitted with such a module, it's then possible at any moment to find out the angle its trajectory is making with magnetic North, and hence to steer it exactly as you would yourself using a compass.
The only 'problem' that may arise is the interfacing of the CMP03 module with the micro-

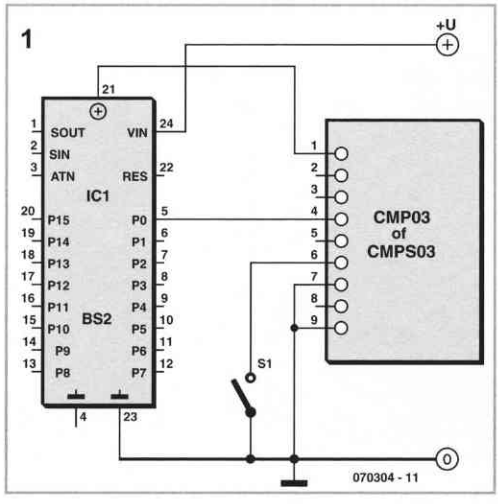

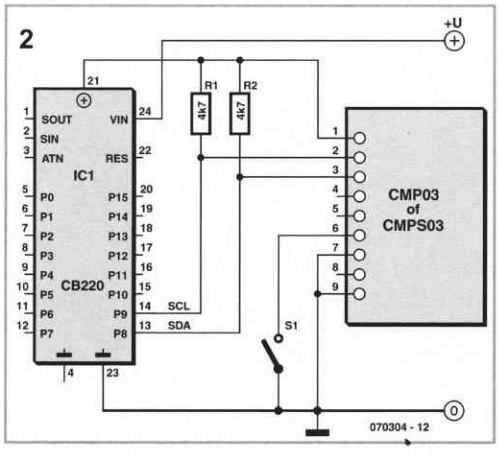

controller fitted in the robot. So in order to cater for the greatest number of robotic configurations possible, we're going to show you how to employ both means of dialogue offered by the module: the PWM signals and the I²C bus.

Figure 1 shows a circuit for using the PWM signals. It has been designed for use with a Basic Stamp II, but can be transposed for any PIC microcontroller programmed in Basic that does not have I²C functions.

Interrupt S1, present on pin 6 of the CMP03 module, is not involved in the dialogue process, but makes it possible to calibrate the module as per a procedure given in the documentation, which we won't reproduce here, as it is perfectly straightforward.

The information supplied by the CMP03 module is a succession of high pulses separated by low states of 65 ms duration. The width of the high pulses indicates the angle of the principal axis of the module with respect to North, according to the following relationship:

$$\text{Position} = (\text{Width} - 1) \times 10$$

where:

- *Position* is the angle in degrees with respect to magnetic North.
- *Width* is the width of the high pulses in milliseconds.

Reading such information with a Basic Stamp II or a PIC programmed in Basic amounts to just two lines of program:

```
PULSIN 0, 1, PULSE
POSITION = (PULSE – 500) / 50
```

The first line enables the instruction `PULSIN` to read the high duration of the pulse generated by the CMP03 module.

The second line merely applies the above relationship, given that the resolution of the measurement performed by `PULSIN` is 2 μs in the case of the Basic Stamp II. So we then have the angle in degrees with respect to magnetic North in the variable `POSITION`.

If you want greater precision, or if your microcontroller does have an I²C interface available, it's possible to use this interface to dialogue with the CMP03 module, as is shown by way of example in **Figure 2**. It has been designed for a Cubloc CB220 or a PIC programmed in Basic with a compiler that has an I2C library, which is the case for most of them these days.

The only precautions to be taken with this circuit concern the I²C bus pull-up resistors, which do need to be fitted as they are not built in to either the CMP03 module or the microcontroller (whichever type it is). If you are using a PIC programmed in Basic, you also need to ensure you correctly choose the ports intended to handle the SDA and SCL signals of the I²C bus, as certain Basic compilers impose restrictions here.

To be in a position to write the corresponding program, all you then need to know is that the I²C address of the CMP03 module is C0 and that four main registers are accessible to us through this address:

- register 0 contains the module's software version number;
- register 1 contains the angle coded in one byte. Hence this value changes from 0–255 corresponding to a circle from 0–360°;
- registers 2 and 3 contain the angle, coded this time in two bytes, in the form of a number between 0 and 3599 (expressed in decimal), which is in fact the angle in degrees multiplied by 10.

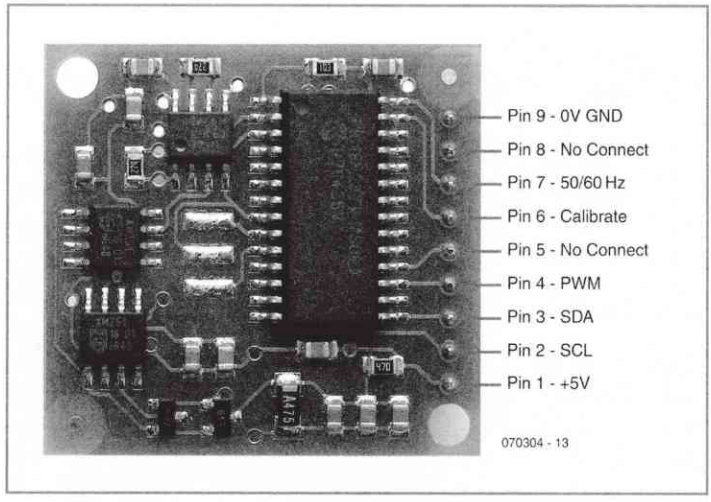

From that point on, reading this information via an I²C bus is quite straightforward, as shown in the very short listing below, written for the Basic language of the Cubloc:

```
I2CSTART
Temp = I2CWRITE (&HC0)
Temp = I2CWRITE(0)
I2CSTART
Temp = I2CWRITE(&HC1)
Version = I2CREAD(0)
Temp = I2CWRITE(&HC1)
Position8 = I2CREAD(0)
Temp = I2CWRITE(&HC1)
Position16.byte1 = I2CREAD(0)
Temp = I2CWRITE(&HC1)
Position16.byte0 = I2CREAD(0)
```

The first three instructions address the module and select the first register to be read. The next instructions read the four previously-described registers in succession, thus making the software version number available in the variable `Version`, the 8-bit coded angle in the variable `Position8`, and the 16-bit angle in the 16-bit variable `Position16`.

The variable `Temp` is not used for anything, but is required by the particular syntax of the I²C instructions of the Cubloc's Basic. By the same token, the constant 0 that must be present in the `I2CREAD` instructions has no particular meaning.

Hence if you use this listing with a PIC programmed in Basic, a slight adaptation might prove necessary, depending on the compiler you are using.

So, whether you choose the PWM or I²C version for interfacing with the CMP03 module, it gives you position information about your robot's trajectory with respect to magnetic North.
All that remains for you to do is to make good use of it so your robot won't 'lose its bearings'.

(070304-I)

Web Links

Devantech
www.robot-electronics.co.uk/shop/Compass_CMPS032004.htm

A little background reading
http://zedomax.com/blog/zedomax-diy-hack-lets-make-a-digitalcompass/
http://zedomax.com/blog/2006/08/16/digital-compassusing-cmps03/

257 MotoBox

ACTUATORS

Drives stepper, DC and servo motors

Joseph Zamnit (MCAST, Malta)

Before a robot moves, no matter if that's walking, swimming, cruising a maze or tearing up asphalt, you need to address the interfacing and driving of different types of motors. Developing the relevant algorithms will increase project development time as tweaks and adaptations seem to be necessary for each new application. This project solves these issues by presenting a generic motor driver board that can drive three different types of motors, stepper, DC and servo, without having to program the algorithm for each motor. MotoBox is ideal for newcomers to robotics as well as for old hands who can use the board for prototyping and development. The board can also be used with two different types of motors simultaneously!

MotoBox Specifications

- Drives 3 types of motors:
  - bipolar stepper motors
  - DC motors
  - servo motors
- Motor actuated using serial port @ 9600,N,1
- Up to 13.8V supply for motors
- Easy to use command set
- Current monitoring, up to 2 A (DC and servo motor) or 4 A (stepper motor)
- LED indicator: green 'ok', red 'error'
- Individual control of each motor driver bridge

The board is programmed by way of an RS232 interface. This is a common protocol found in many microcontrollers. It can be driven from the serial port of a computer or via another microcontroller. The script used to control the motors is a very easy 6-character command set. It has been kept this way in order to have a very user-friendly interface.

The script also allows the state of the board to be read back to the user. Additionally the board monitors the current taken by each motor driver and switches off the driver if a short-circuit is detected.

The author is a professional engineer with many years experience is designing and constructing electronic circuits. His specialisation is planar antenna design and currently he is a Telecommunications lecturer at MCAST, Malta.

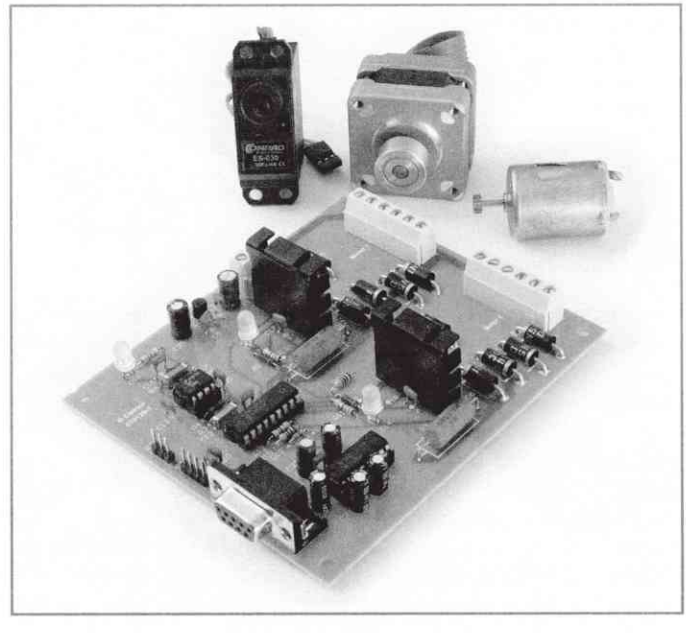

Circuit description

Referring to the schematic in **Figure 1**, the heart of the circuit is a PIC16F628A which controls and monitors the motor drivers. The

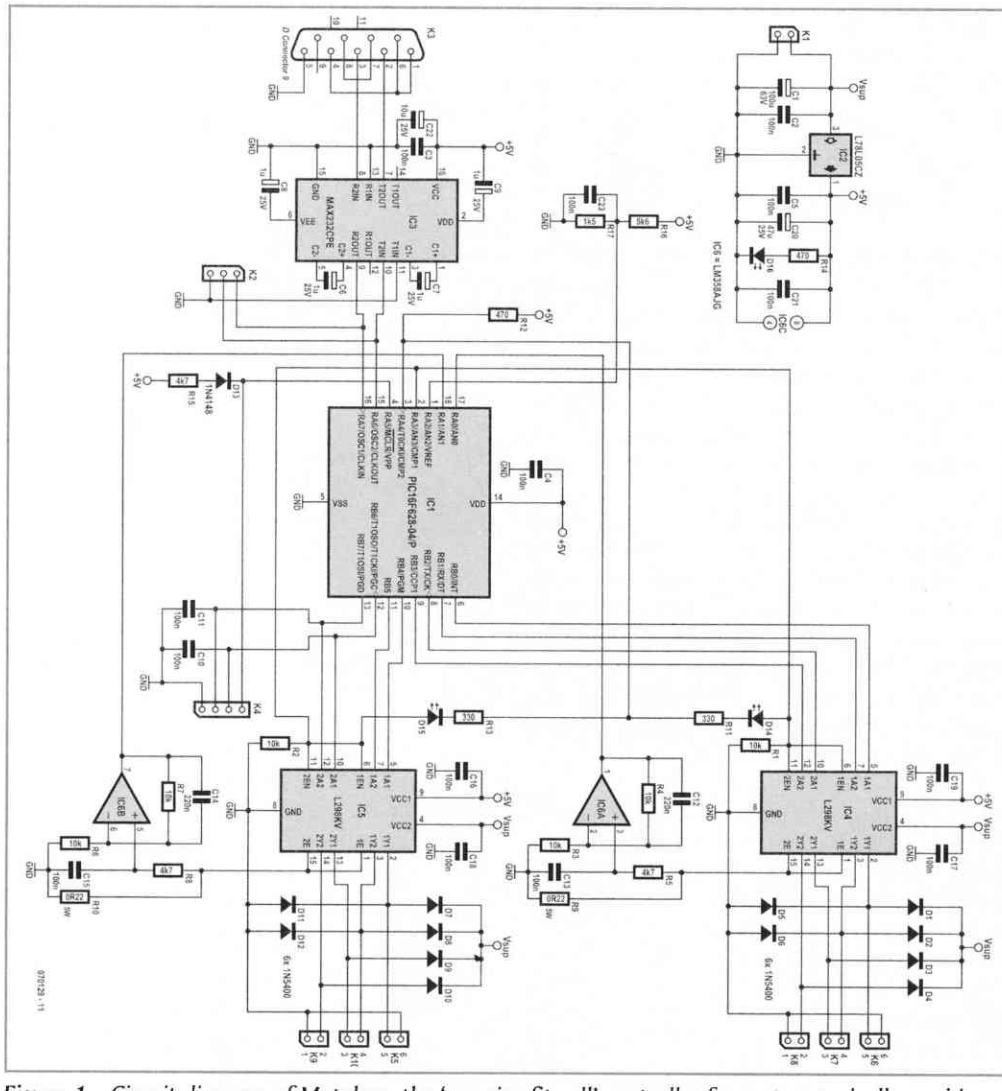

Figure 1 *Circuit diagram of Motobox, the 'one size fits all' controller for motors typically used in robots.*

microcontroller is configured to use its internal 4 MHz oscillator, thus freeing the pins associated with the crystal to be used as the serial interface.

PORTB is used as an output to drive the motor controllers, while PORTA is used for various functions, to read the value of the current, control the drivers and control the driver LED's. The MCLR pin is held High by means of R15 and D13. An ICSP programming connector is also included in order to program the device in place. The PGC and PGD lines are decoupled by a 100nF capacitor.

The module is powered by a 12-V supply which is regulated down to 5 V by means of an 78L05. Power-On status is shown by the green LED D16. The module has been designed to operate from a maximum of 13.8 V from a freshly charged lead-acid battery and down to 7 V. It is important for

the module not to share the power source used to drive the motor because of the current surges, spikes and noise induced by the motor.
A MAX232 is used to interface the module to the serial port of a desktop computer or laptop. It is imperative that the MAX232 be included in the circuit or else make sure that RA7 (receive pin) is held Low when not used. A floating input will cause the microcontroller to interpret noise as data and may result in erroneous operation. The module can also be controlled by another microcontroller by using connector K2.

The motors are driven by the power stages provided by the L298, each driving a single motor. The L298 is a dual half-bridge driver capable of 2 A per channel, with separate enabling and current sensing for each bridge. It is suited to driving different types of motors. In this project the L298 is enabled by the microcontroller and the Enable line is pulled Low on power-up to ensure that the IC is disabled. Decoupling capacitors, 100 nF each are placed near the IC.

A DC amplifier is built around the LM358 which senses the voltage across the sense resistor. It is followed by a lowpass filter and a buffer amplifier whose gain decreases with frequency filters any noise. DC motors generate spikes when the armature makes contact with the commutator, which is reflected as a current spike and appears across the sense resistor. Current spikes may cause the microcontroller to detect a short-circuit and thus stop the motor. The filter will smooth out any voltage spikes. In addition, an algorithm is implemented in the microcontroller firmware that detects an overcurrent condition for a specified time before switching off the affected channel.

Construction

Good news: the project does not have exotic components to source, with the possible exception of the clip-on heatsink – but then that's available from Mouser.
Through-hole components are used in the project to simplify construction and all components are easy to obtain as well as mount on the PCB, of which the component overlay is shown in **Figure 2**.

There's little to say on the components used except that the 0.22-Ω resistor is preferably not of the wirewound type and the bi-colour LEDs have two pins, not three! If you do not envisage interfacing the board to a PC, the sub-D connector may be left out. However, the MAX232 should always be present. Likewise, IC4 and IC5 should always be soldered to the PCB.

Dry testing

Once the circuit has been constructed it should be tested for correct operation. Power up the circuit with none of the ICs inserted. D16 should light up. Check if there is 5 V on the relevant socket pins for IC1, IC3, IC4, IC5 and IC6. The supply voltage should also be

Table 1: Driver options chart

	Motor header function							
	Output							
	Motor 1				Motor 2			
µC Pin	RB3	RB2	RB1	RB0	RB7	RB6	RB5	RB4
Header pin	2	3	4	5	2	3	4	5
	Mode							
Stepper driver	Each output drives a motor phase				Each output drives a motor phase			
DC motor driver (1)	✓	✓			✓	✓		
Servo driver (2)	✓(3)	P(4)	P(4)	✓(3)	✓(3)	P(4)	P(4)	✓(3)

(1) Differentil drive
(2) Use the ground pin on the connectors for the servo
(3) Allows 2 servos to be driven simultaneously with the same signal
(4) Used to power servo motor

present on IC4 and IC5, socket pin 4. If this is correct, switch off and insert the programmed microcontroller and the rest of the ICs. The microcontroller can be programmed in-circuit using connector K4.
If the board is to be controlled from another microcontroller, connector K2 may be used. This is a straight through connector and the Transmit/Receive signals must be crossed before being connected to the board. If the female sub-D connector is going to be used, the signals are crossed over on the board itself.

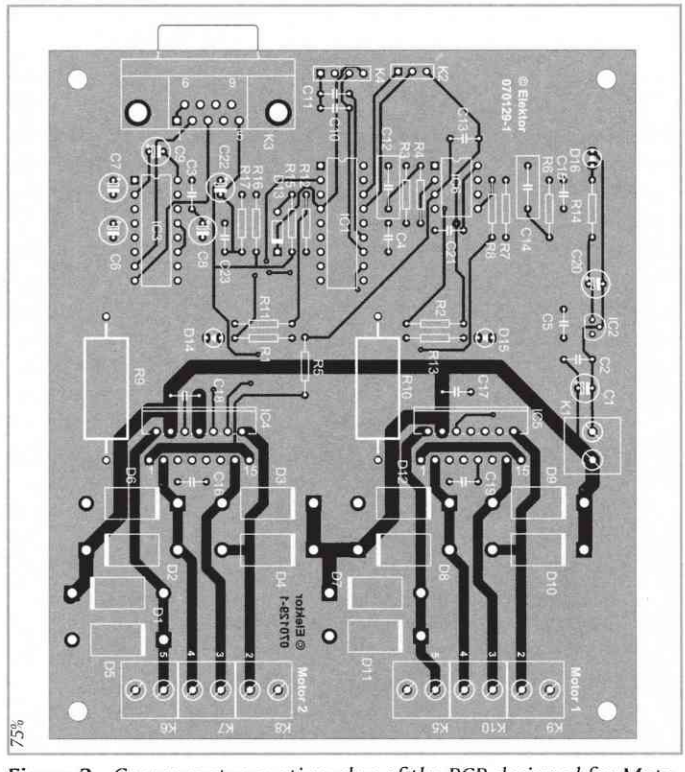

Figure 2 Component mounting plan of the PCB designed for Motobox. The copper track layout is a free download from the Elektor website.

Motors get connected...

The best way to fully test the board is to connect it to the PC and use HyperTerminal to send commands. Attach a motor according to one of the configurations shown in **Figure 3** in order to test the board. Use the motor driver options chart, **Table 1**, to connect the motor to the correct pins.

... and controlled

As soon as the board is powered up correctly, it will return the character 'I' to the Host to signal that it's been initialised and is waiting for a command. All commands are six characters long, you can find them listed in **Table 2**.

Let's assume a DC motor has been connected to the board. For the motor to turn in the for-

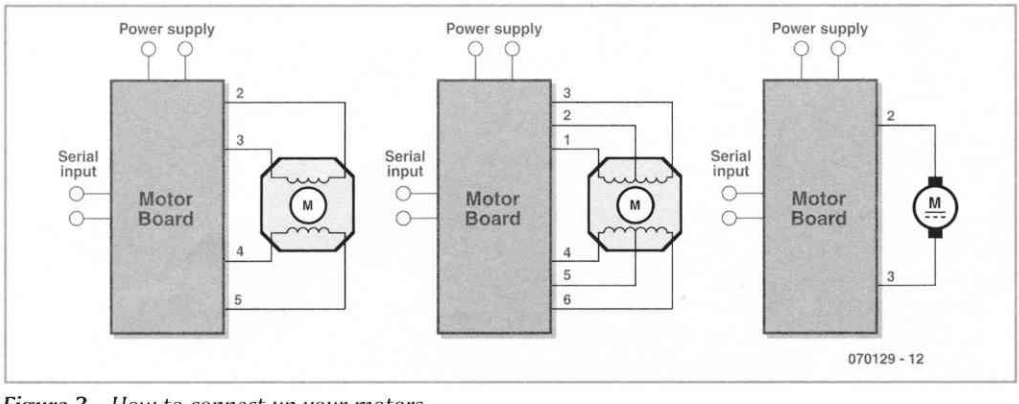

Figure 3 How to connect up your motors.

ward direction the command 'DC1FOR' has to be typed in lowercase or uppercase. The software will convert all letters to uppercase. When the command has been sent it will be executed, the character 'A' indicating that reception is acknowledged and the actual command is echoed. This is very useful when the board is used with a (dumb) terminal. If the command has been sent incorrectly, the letter 'E' will be sent back indicating an erroneous command. The command buffer is cleared and the board waits for a new command. The LEDs will turn light up when the system is working correctly and red when the motor driver has been turned off.

Stepper motor commands allow the spindle to be turned cw (clockwise) and ccw (counter clockwise) by a number of steps (maximum 999 steps). When this command is selected, a 3-digit number must provided, for example 050 to move 50 steps. Even if steps less than 100 will be done the leading zero must be provided.

Table 2: Command syntax

	Command	Command description
1	ST1FOR	Stepper 1 cw
2	ST1BAK	Stepper 1 ccw
3	ST2FOR	Stepper 2 cw
4	ST2BAK	Stepper 2 ccw
5	STBFOR	Both steppers cw — simultaneously
6	STBBAK	Both steppers ccw — simultaneously
7	STSYNC	Get both steppers in same position in case of slip
8	AMSTOP	Emergency stop. Stop all motors – e.g. overcurrent
9	ST1FXX	Turn stepper 1 xx (999 max) positions cw
10	ST1BXX	Turn stepper 1 xx (999 max) positions ccw
11	ST2FXX	Turn stepper 2 xx (999 max) positions cw
12	ST2BXX	Turn stepper 2 xx (999 max) positions ccw
13	DC2FOR	DC motor 2 ON/cw
14	DC2BAK	DC motor 2 ON/ccw
15	DC2OFF	DC motor 2 OFF
16	DC1FOR	DC motor 1 ON/cw
17	DC1BAK	DC motor 1 ON/ccw
18	DC1OFF	DC motor 1 OFF
19	DCBFOR	DC both motors ON/cw
20	DCBBAK	DC both motors ON/ccw
21	DCBOFF	DC both motors OFF
22	SV2FOR	Servo 2 cw
23	SV2BAK	Servo 2 ccw
24	SV2MID	Servo 2 centre position
25	SV2HLD	Servo 2 hold
26	SV1FOR	Servo 1 cw
27	SV1BAK	Servo 1 ccw
28	SV1MID	Servo 1 centre position
29	SV1HLD	Servo 1 hold
30	MTYPEX	Return motor type
31	STDELX	Configure stepper motor delay
32	ECHOST	Configure echo. Default = ON
33	AMONXX	All motors ON
34	MONOFF	Do not monitor current consumption
35	CMONON	Monitor current consumption
36	RESUME	Enable motor after overcurrent condition

COMPONENTS LIST

Resistors
R1-R4, R6, R7 = 10 kΩ
R5, R8, R15 = 4kΩ7
R9, R10 = 0.22 Ω 5W
R11, R13 = 330 Ω
R12, R14 = 470 Ω
R16 = 5kΩ6
R17 = 1kΩ5

Capacitors
C1 = 100 µF 40V radial
C2-C5, C10, C11, C13, C15-C19, C21 = 100 nF
C6-C9 = 1 µF 25V radial
C12, C14 = 220 nF
C20 = 47 µF 25V radial
C22 = 10 µF 25V radial
C23 = 10 0nF

Semiconductors
D1-D12 = 1N5400
D13 = 1N4148
D14, D15 = bicolour LED, 5mm, 2 terminals
D16 = LED, 5mm
IC1 = PIC16F628-04/P, programmed, order code 070129-41
IC2 = 78L05
IC3 = MAX232
IC4,IC5 = L298N with heatsink for Multiwatt15 case (mouser.com)
IC6 = LM358

Miscellaneous
K1, K5-K10 = 2-way PCB terminal block, lead pitch 5mm
K2 = 3-way SIL pinheader
K3 = 9-way sub-D socket (female), angled pins, PCB mount
K4 = 4- way SIL pinheader
PCB, ref. 070129-1
PIC source & hex code files, free download # 070129-11.zip from Elektor website

The DC, servo motor and status commands are executed immediately, but the stepper motor commands are subject to a delay (default 20 ms) so the command will be acknowledged after the stepper motor has been actuated.
Sending a command within this interval will cause it to get lost and will be not executed. The type of motor in use can be read back at any time using the command 'MTYPEX', which will return a character depending on the type of motor being used.

Overloading, spikes, surges...
Through the analogue comparator, the software section will continuously monitor the current consumed. The board will switch off the motors if the current consumption exceeds the specifications for the motor type in use.

Simple filtering takes place so that the controller will not switch off the motors at 'just any' current spike. Rapid on and off switching of DC motors will cause large current spikes, which may cause the controller to shut down the particular motor driver. You can disable the current monitoring but this is not recommended. Overcurrent can cause the L298 to overheat and get destroyed. A 'RESUME' command has to be sent after the motor driver has been switched off to resume motor operations. A grace period is given to enable another command to be sent and try to get the motor unstuck from its current position.

Software
The source code and hex code for the PIC16F628A is available as a free download from the Elektor Electronics website. The file number is 070129-11.zip (July/August 2007).

(070129-I)

Author's websites and email address
http://telecomms.no-ip.org
www.mcast.edu.mt
jozamm@gmail.com

Web Links
www.microchip.com
www.st.com/stonline/products/literature/ds/1773.pdf

258 Satnav for Robots

GPS guidance for autonomous vehicles

Ulli Sommer

A (frequently unfulfilled) ambition of every robot builder is to make their machine capable of autonomous navigation. This is an ideal application for a GPS receiver module: these have recently become very cheap to buy. Our GPS-based navigation system is built around an ATmega32, programmed using BASCOM BASIC. It communicates with the outside world using an I^2C bus.



Any robotics hobbyist would dream of being able to build a robot which, like the famous Mars Sojourner Rover, can autonomously negotiate unknown terrain. Ideally one would just program in the coordinates of the desired destination and the little chap would make his own way there automatically. Although fully autonomous robots must remain a pipe dream for now, a solution is available to the navigation problem, as we demonstrate here with a circuit board designed to be added to a domestic surveillance robot (see photograph).

Rather than develop a navigation system from scratch ourselves we make use of low-cost receiver modules that receive and process signals from the GPS satellite positioning system. To this we add a moderately powerful microcontroller that can be programmed using free software.

ATmega at the helm

Our GPS-based navigation system is built around an Atmel ATmega32, which appears at the heart both of the circuit diagram (**Figure 1**) and of the prototype printed circuit board (**Figure 2**). The microcontroller is programmed in a dialect of BASIC using the BASCOM development system, which is widely used and available for free (for the demonstration version at least) download from the manufacturer [1].

Also, the source and object files for the navigation program are available for free download from the Elektor Electronics website. The file reference is 070350-11.zip. An ISP cable is also required, obtainable for example from [3].

Any commercial GPS 'mouse' receiver can be used as long as it has an RS-232 interface. If the interface uses TTL signal levels it can be connected directly to our printed circuit board; if, on the other hand, it uses standard RS-232 levels (up to ±15 V) a MAX232 level shifter must be connected in between. Often a robot's main circuit board will already have a suitable level shifter IC on it.

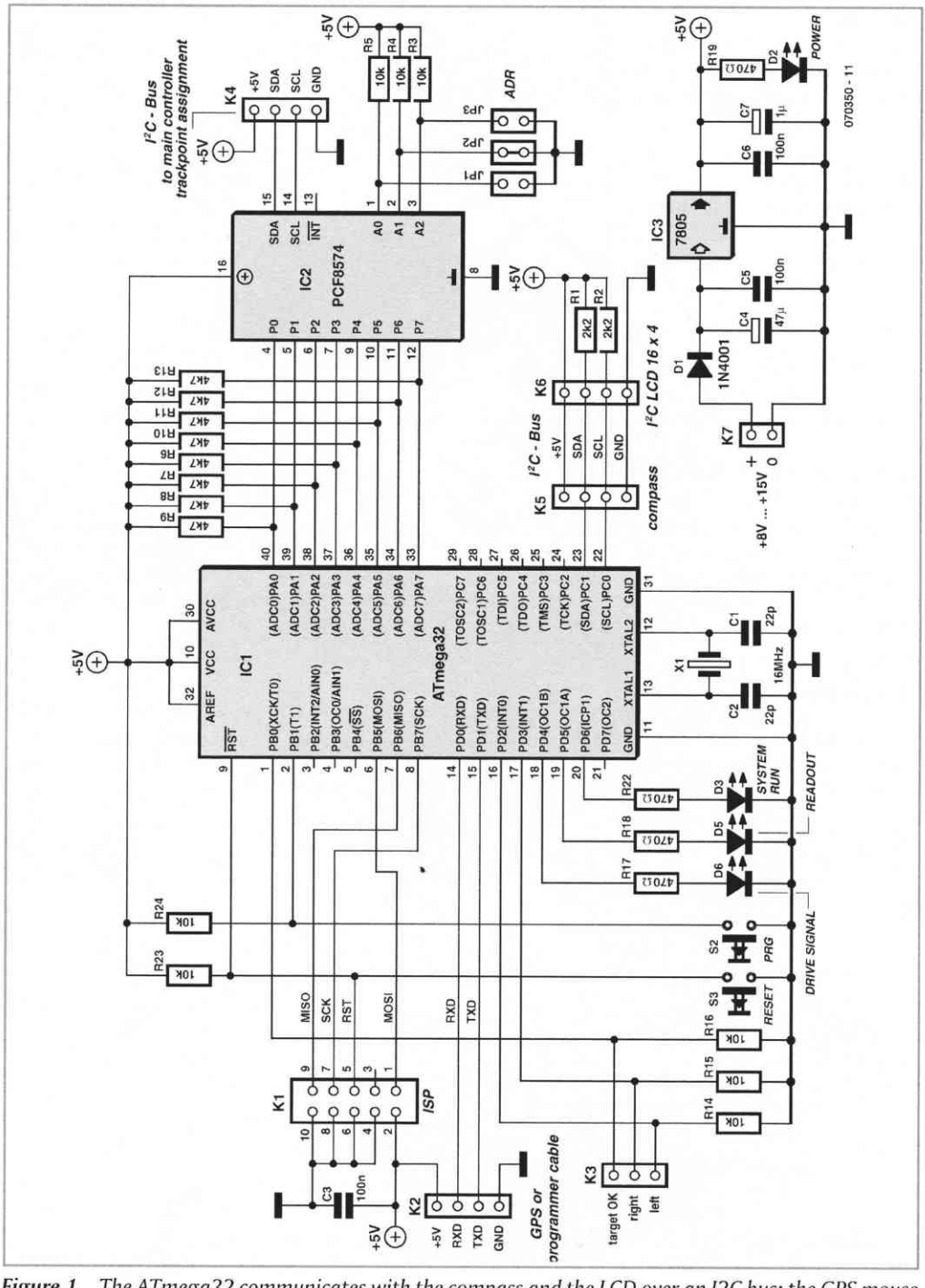

Figure 1 *The ATmega32 communicates with the compass and the LCD over an I2C bus; the GPS mouse is connected via RS-232. The PCF8574 I2C interface chip takes on the task of accepting a control byte and making it available on pins 33 to 40 of the ATmega.*

The GPS mouse gives the exact geographic coordinates (latitude and longitude) in a defined format: see text box. It can also determine the compass direction of movement if its speed is more than about 3 km/h to 5 km/h. Since we wish to determine orientation even when stationary we require an additional 'electronic compass' (see block diagram in **Figure 3**).

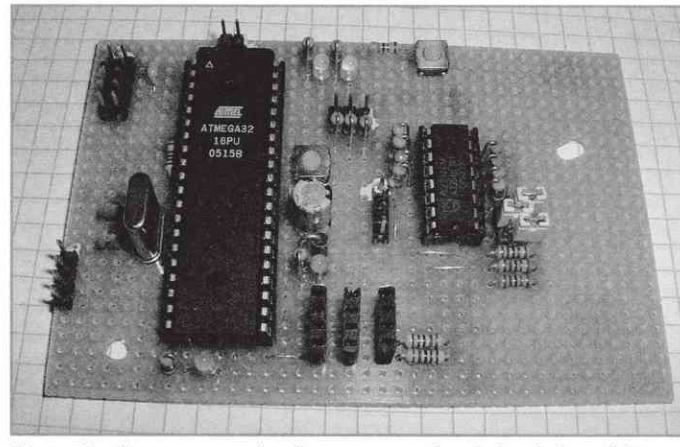

Figure 2 *Prototype navigation system printed circuit board for autonomous robots.*

A suitable compass module is, for example, the Devantech CMPS03, available from [4]. This compass is connected to the I2C port on our printed circuit board.
If we want to display the position and orientation we will also need an LCD module. The microcontroller is rather lacking in I/O port pins, and so the most practical solution is to drive the display also via the I^2C bus. There do exist LCD modules with built-in I^2C interfaces, but an alternative is to use an I^2C interface chip such as the PCF8574 [5] (see **Figure 4**). We will see another use of this device in our circuit later on.

How to program track points
Before attempting any autonomous journeys we must program a series of set coordinates ('track points') into the navigation system. The first step is to replace the GPS mouse with a (null modem) data cable, connected to a PC. On the PC, start up a terminal emulator program such as Hyperterminal. A terminal emulator is also included in the BASCOM package.

The interface parameters must be set as for the mouse (i.e., to 4800 baud). When connection has been set up, press the reset and programming buttons simultaneously. Then first release the reset button and then the programming button around a second later. You should see a welcome message (which indicates how to get help) and a prompt on the terminal.

```
**********************************
* GPS-Navigation Programmng Mode *
* use HELP for help *
* Sommer Robotics 2006 V1.0 *
**********************************
GPS-NAVI:\
```

The following commands are also available:

- 'Data' lists the stored GPS data;
- 'Input' allows the GPS data to be edited;
- 'Reset' restarts the navigation system.

The coordinates of the track points can be determined using a separate GPS system; alternatively, the robot can be moved manually to each track point in turn and the coordinates read off the LCD.

With the track point data programmed in, the robot can be left to its own devices!

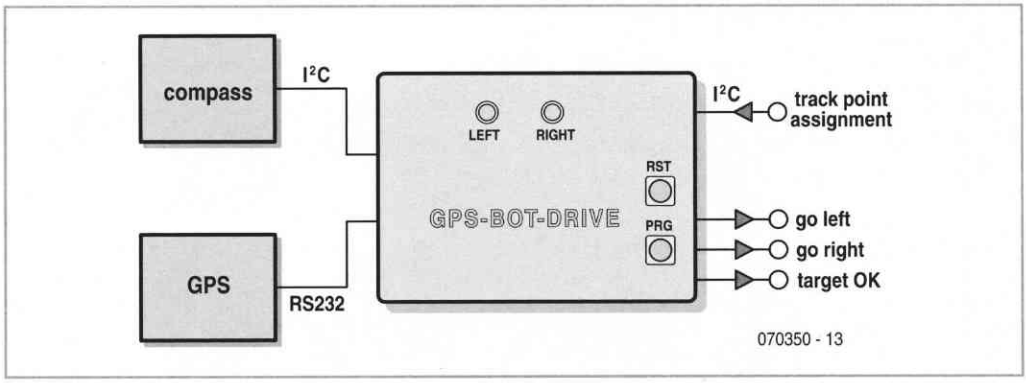

Figure 3 Simplified block diagram of the navigation system. The buttons are used when programming. Commands for the motors are output on two port pins.

Motor control

Of course we do not just want our robot to display where it is; we want it to make its way to our desired destination. In doing this the navigation system outputs direction control information on two pins.

Output pins Motor_l and Motor_r combined give the desired direction of travel as follows:

Motor-l	Motor-r	Function
0	0	STOP
1	1	straight on
1	0	turn left
0	1	turn right

Now we need a way to tell the robot navigation system where we want it to go.

To do this we first need to program a series of set coordinates ('track points') into the unit, which is done using the cable before attempting any autonomous journeys (see text box). In normal operation the navigation system then only needs to be told which track point it should try to visit next, which can, for example, be done by the robot's main processor.

This second communications challenge is also solved using the I²C bus, which is easy to use from within BASCOM BASIC. A PCF8574 I²C interface chip takes on the task of accepting a control byte and making it available on pins 33 to 40 of the ATmega (see Figure 1).

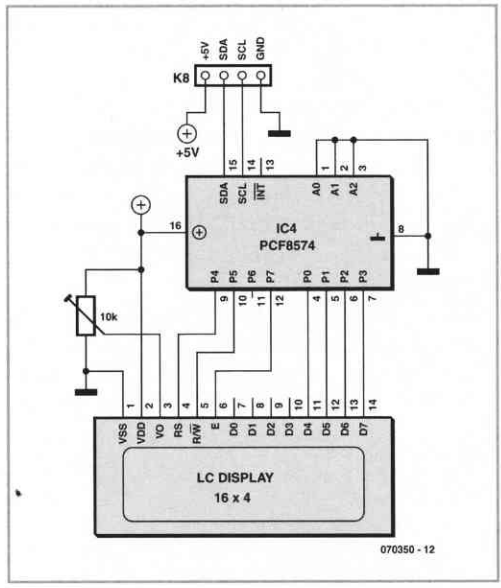

Figure 4 The LCD is driven over an I2C bus, the PCF8574 interface chip making a second appearance in the circuit (see Figure 1).

The software configures the device to run in input mode. For a simpler hardware design, it is of course possible to dispense with the interface chip and drive the port pins of the ATmega32 high and low directly and in parallel.

To select, for example, track point 1 using the I²C interface we must send the number '1' to the PCF8574. In BASCOM BASIC this might be done as follows.

GPS mouse data

A typical data packet received from a GPS mouse using the $GPGGA protocol might appear as follows:

```
$GPGGA,191410,4735.5634,N,00739.3538,E,1,04,4.4,351.5,M,48.0,M,,*45
```

Time: 191410 | Latitude: 4735.5634,N | Longitude: 00739.3538,E | No. of visible satellites: 04 | Protocol: $GPGGA | Measurement quality (0 = insufficient, 1 = ok): 1

Here '$GPGGA' is the protocol type, '191410' the time, '5212.9324,N' the latitude, '00007.5930,E' the longitude, '1' indicates that the reading is valid and '04' is the number of satellites in view. As you can see, this covers all the information we need. All we need to do is switch the GPS mouse to the $GPGGA protocol and set the communication speed to 4800 baud. Other protocols should be disabled, and the reporting interval set to approximately 1 s. The settings are made using the software provided with the GPS mouse.

```
I2cstart
I2cwbyte &H7A
(address of PCF8574: see data sheet for
addressing scheme)
I2cwbyte 1 (track point number)
I2cstop
```

When the track point selection byte has been sent, the navigation system determines the direction to the destination. This calculated direction is then compared to the current orientation of the robot (obtained from the compass). In this calculation we ignore the curvature of the earth, since we do not expect our robot to embark on long-distance journeys!

If the desired and actual directions are in agreement, the robot advances in a straight line. If, as it moves, the robot should deviate from the line to the destination, the navigation system swings into action and brings it back on course. If the quality of the GPS signal is too poor or too few satellites are visible the robot will wait until an adequate signal is available to recalculate the desired course.

When the destination is reached the robot stops and takes the pin Dest_ok high. This signal can be used by the robot's main processor, for example to load up the next track point so that the machine traces out a predetermined course.

(070350-I)





Web links

[1] *www.mcselec.com*
[2] *www.elektor.com*
[3] *www.kanda.com*
[4] *www.robot-electronics.co.uk*
[5] *www.nxp.com/cgi-bin/pldb/pip/pcf8574*

259 Paralleling LiPo Batteries

Paul Goossens



LiPo (Lithium Polymer) batteries have a number of advantages compared to NiCd and NiMH batteries. In addition to having a lower weight for the same capacity, LiPo batteries can also be made in various shapes. The first property is eagerly exploited by manufacturers of mobile phones, MP3 players and the like.

Beside these advantages, LiPo batteries also have a few disadvantages. One of these disadvantages is that they are not able to supply the same amount of current as their NiCd and NiMH brethren. The maximum current is typically 10 C, where C is the nominal capacity. Newer versions are able to supply 15 C to 30 C continuously, but you will be paying a much higher price for those!

Using a battery rated at 1000 mAh this means that a normal LiPo cell may be loaded at up to 10,000 mA or 10 A. The current is often allowed to be double that for short periods of time, but that is not so beneficial to the life expectancy of the LiPo cells! There are many cases where we would like to draw more current from the battery. This can be done by connecting multiple cells in parallel.

Current limiting

Connecting multiple cells in parallel is, in principle, a simple soldering job. We don't have to waste any words on that! However, we do have to make sure – before the cells are connected in parallel – that they all have exactly the same voltage across their terminals. If there is even only a small difference between the source voltages then during and after connecting the batteries in parallel a large equalising current can flow. This current will discharge the battery with the higher output voltage and charge the battery with the lower voltage, until both voltages are the same. This equalising current obviously has to be smaller than the maximum charging current (typically 1 C). Before we can connect the cells in parallel we have to take measures to limit any equalizing current. The difference in voltage is often so small that a simple current regulator does not work properly. However, using a resistor we can limit this current quite easily.

Manual control

To do this correctly we need to know the maximum charging current for both batteries. We then measure the voltage across both batteries. The difference between these two voltage we call the difference voltage. The negative terminals can now be soldered together. Now we temporarily solder a resistor between the two positive terminals. The value of this resistor has to be at least the difference voltage divided by the maximum charging current.

The battery with the greatest amount of charge will now charge the other battery at a limited rate. The latter will therefore charge slowly. After a while the difference voltage will reduce and therefore the charging current as well. If this process doesn't go quickly enough for your liking then you can adjust the resistor value from time to time to increase the charging current again. Both positive terminals may be directly connected together once the difference voltage has dropped so low that a resistor of 10 mΩ would have been enough. A new and more powerful LiPo battery is now a fact.

(070274-I)

260 Robot MOPS

MECHANICS

Markus Bindhammer

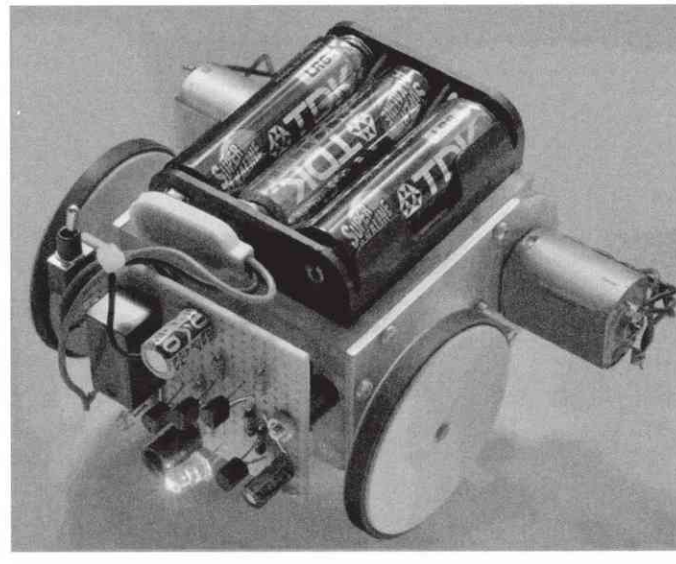

MOPS is a small robot which generally bumbles around the floor and performs avoidance manoeuvres whenever it detects an obstacle in its path.

MOPS uses a forward facing LED to illuminate its path and a phototransistor to detect light reflected from obstacles, as soon as an obstacle is detected MOPS goes into reverse and turns for a few seconds on its two wheels before setting off again in another direction. A look at the circuit diagram in **Figure 1** indicates that MOPS is built (rare for this day and age) entirely from discrete components. Resistors R1 to R4 together with C1, T1 and T2 form a multivibrator circuit which continually switches the LED on and off. On power-up current flows through R4 and the base-emitter junction of transistor T1. T1 is therefore conducting and current flows through R1 and the base of T2 which is also conducting. Current through the collec-

1

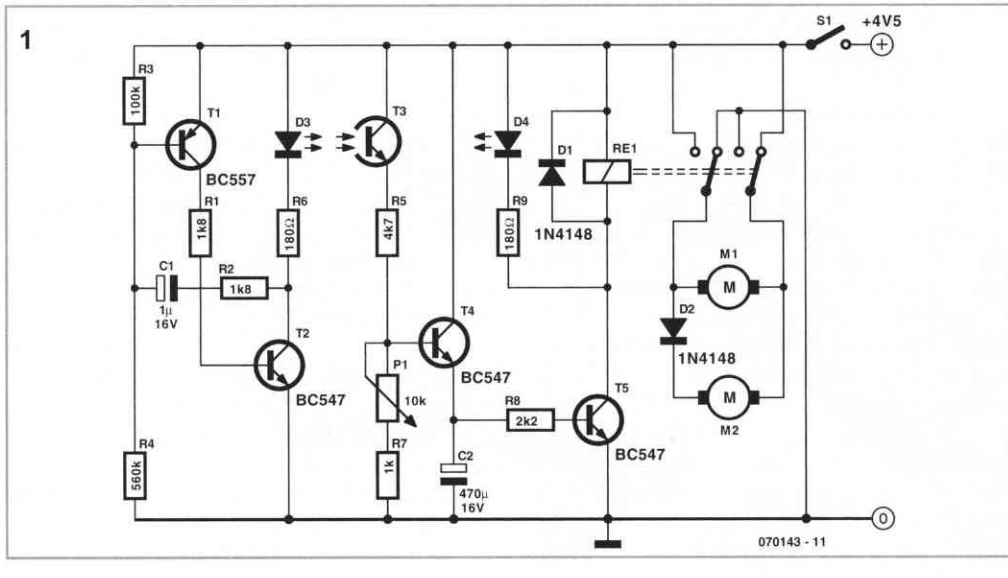

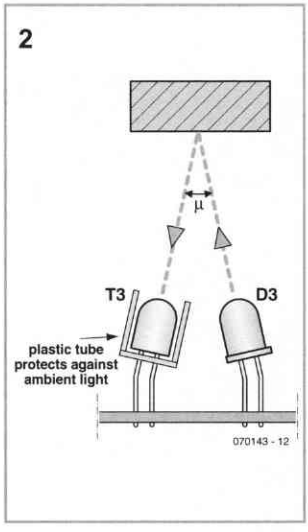

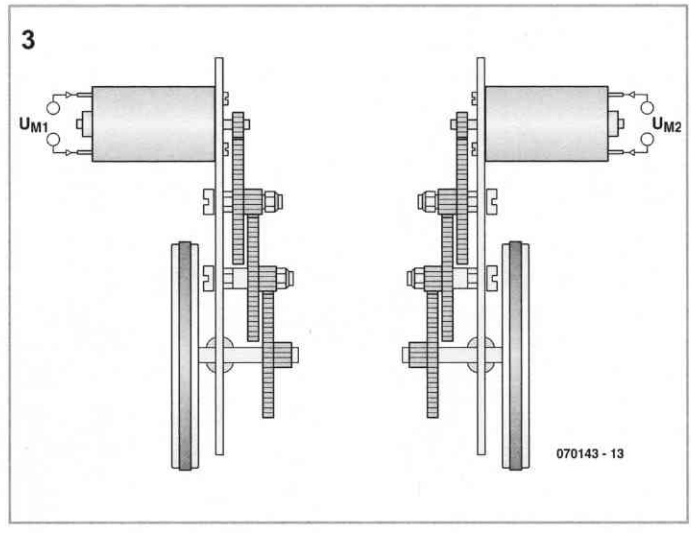

tor of T2 and R6 lights up the LED. During this time capacitor C1 is charging up and when the voltage level gets sufficiently high the base of T1 becomes reverse biased and T1 turns off.
T2 will also turn off along with the LED. C1 begins to discharge until the base of T1 is low enough to begin conducting again. T2 switches on which reinforces the low base voltage on T1 via C1 and the cycle continues.

The LED light source for obstacle illumination does not need to flash, it can be lit continuously but there are two reasons for the flashing LED: firstly it conserves battery power, giving MOPS a longer range and secondly (and more importantly) a flashing light looks much more impressive than a boring old continuous light source.

When reflected light falls on the phototransistor T3 a current flows through R5 to ground which produces a voltage at the base of T4 to make it conduct. The values of R5, P1 and R7 affect the switching threshold so adjustment of P1 will help to reduce spurious detections caused by external light sources.

Turning P1 (a preset could be used here instead) so that it increases its resistance will make T4 more sensitive and vice versa. T4 conducts in synchronism with the flashing LED so capacitor C2 acts as a reservoir capacitor to ensure that once T4 begins to conduct, sufficient energy is stored in C2 to ensure that T5 remains conducting continuously until the obstacle is out of range and T4 switches off. It takes a few seconds for C2 to discharge and during this time MOPs is performing its avoidance manoeuvre.

T5 switches a double pole relay which has the effect of performing this manoeuvre. In normal forward motion the relay switches the positive and negative supplies to both motors and diode D2 is conducting. When an obstacle is detected the relay switches and reverses the polarity of the motor connections. D2 now becomes reverse biased and no current can flow through motor M2 while M1 goes into reverse.
This gives MOPS the reverse and turn response to obstacles. A few seconds after the obstacle is no longer detected the relay switches back and MOPS carries on as before but in a different direction.

Figure 2 shows a close up of MOPS's eye mounted in a tube which helps to make obstacle detection more directional and reduces

Web Link
www.elexs.de/robo1.htm

the effects of external light sources. With this set-up it was possible to detect obstacles at a distance of 10 cm. The range depends largely on the reflective properties of the obstacle so darker objects will only be seen at shorter ranges. The circuit can be modified to read microswitches connected to contact feelers mounted on the front of MOPS this will help avoid collisions with matt black objects. **Figure 3** shows the layout of the two motor and gearbox assemblies.

(070143-I)

261 IR Communications using a UART

COMMUNICATIONS

Dominik Tewiele

If you wish to set up a medium-range (5 m to 10 m) communication link between two robots or between a robot and a base station, infrared light can be an economical alternative to using radio modules.

Tried-and-tested standard protocols and supporting components are available for the modulation necessary to suppress the effect of ambient infrared light. Practically every modern microcontroller sports one or more asynchronous serial interfaces (UARTs), which make perfect partners for IR receivers and transmitters.

An example of a suitable receiver is the TSOP17xx, where the 'xx' stands for the modulation frequency, measured in kilohertz. Its output can be connected directly to the RxD pin of a microcontroller.

Because of the open-collector output stage, it is possible to connect several receiver modules in parallel to increase the area covered. The transmitter consists simply of an IR diode and a couple of discrete components.

A timer in the microcontroller can be used to provide modulation, or alternatively an external NE555 can be used. In this example we are using an ATMega8 with Timer1 configured so that the output compare registers OCR1A and OCR1B control the frequency and pulse width of the signal on output PB2. The NPN transistor then applies the required modulation.

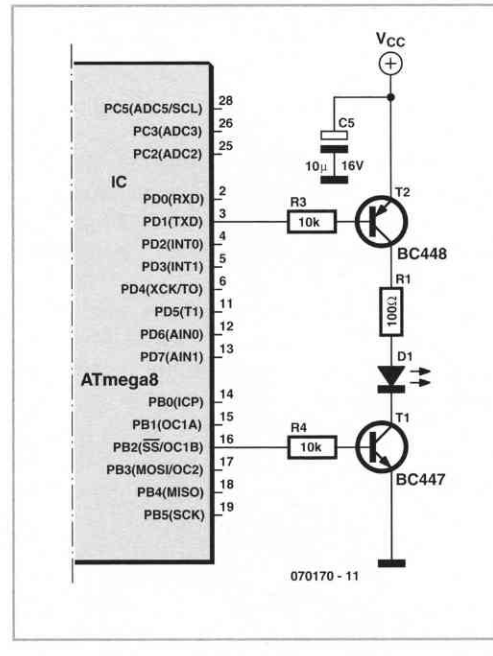

Here again, we can wire several IR LEDs in parallel to increase the transmit range and coverage angle.

The series current limiting resistor for the IR LEDs should be chosen with consideration for the desired range and the maximum pulse current that the LEDs can handle. This last figure can be found on the LED's datasheet, which will also help determine a suitable pulse width to set in the software.

The maximum baud rate that can be achieved will depend on the receiver chosen. Using a

TSOP17xx around 1200 baud is possible, which should be adequate for simple control commands.
For bidirectional communication it will be necessary to build both a receiver circuit and a transmitter circuit at each end of the link. It is worth bearing in mind that because of the effect of reflections scope for full-duplex operation is rather limited.

(070170-I)

262 Formula Flowcode Buggy

MISCELLANEOUS ELECTRONICS AND DESIGN IDEAS

A low-cost robot – not just for schools & education

Bart Huyskens,
St Joseph's institute (Schoten, Belgium)

Out of Belgian schools has arrived an £ 85 (€ 125) robot buggy that the designer hopes can reverse the decline in the study of electronics and technology across Europe and, potentially, wider.

Like many in the engineering teaching fraternity, the author is increasingly aware that electronics – and most engineering and science related activities – fail to attract young people. To people who have grown up with a fascination for technology this is a great shame and it really is very strange when you consider that young people are fascinated by all things electronic – like i-pods, digital cameras and mobile phones. But for some reason our schools fail to capitalise on this interest and attract young people to technical careers.

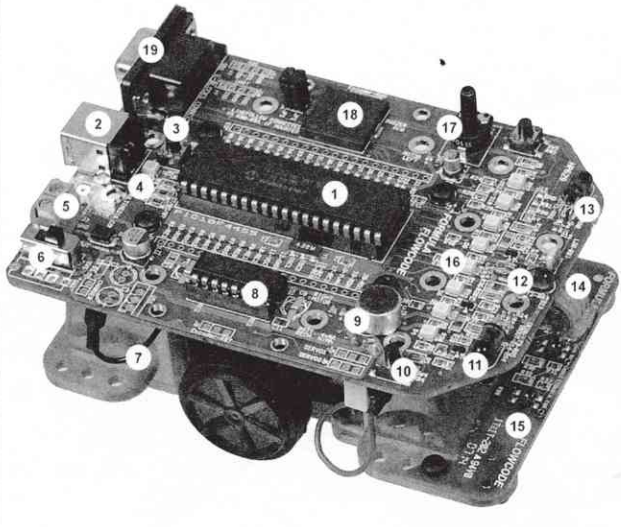

1 The brains of Formula Flowcode: a PIC18F4455 microcontroller
2 USB socket
3 Master reset switch
4 Programming LED
5 External 5V supply input
6 Power switch
7 Plastic chassis with battery compartment, motors with gearboxes, and 2 wheels.
8 Motor driver chip: an L293D
9 Microphone with sound level amplifier circuit
10 User definable press switches
11 Distance sensor – right
12 Distance sensor – centre
13 Distance sensor – left
14 Light sensor
15 Line following circuit board
16 8 user definable LEDs
17 Microphone volume control
18 Loudspeaker
19 E-blocks expansion socket

Figure 1 *Formula Flowcode functional parts.*

Long and hard thought was given about how to solve this and what the real problems are (including the facts that electronics can be mathematical, parts of the subjects are difficult to understand, and it has a very dull image). All sorts of ideas have been tried, and some have partially worked, but not to our satisfaction.

There is one exception that stands out – Lego. Lego's NXT robot looks cool, is cool, and is fun to use. But it is expensive, does not really teach anything about electronics, and you can't really 'get under the hood' and use it as a platform for learning more than just simple programming.

About six months ago, during a conversation with engineers at Matrix Multimedia in England, we had an idea that might go some way to solve this problem – a programmable robot buggy of our own, with more functionality than the Lego NXT, that does have 'open architecture' which can be used for a wide range of teaching and learning activities in electronics and technology.
In the six months since, we have been working hard to make these ideas come to life and we have called the project 'Formula Flowcode'.

Formula Flowcode is a complete hardware and software robotics solution for learning about electronics and programming. This article describes what Formula Flowcode does, how it works, how we hope it can be used to learn all about robotics...

And here it is
Figure 1 shows a picture of Formula Flowcode and a list of the components and features on the buggy. But how does it all work?

Let's start at the beginning. The whole Buggy is designed around the new and very powerful PIC18F4455 microcontroller from Microchip.
This 40-pin device operates at 24 MHz and will execute programs at an amazing speed of 6 MIPS. A meet & greet diagram of this CPU is shown in **Figure 2**. The device connects directly to your USB port and contains a bootloader program so that it can be programmed using a version of Flowcode 3 supplied free of charge with the buggy. The PIC18F4455 has two separate hardware PWM outputs, a UART, I2C, Analogue Inputs, Pin-, Port- and Timer Interrupts and a lot of Digital I/O.

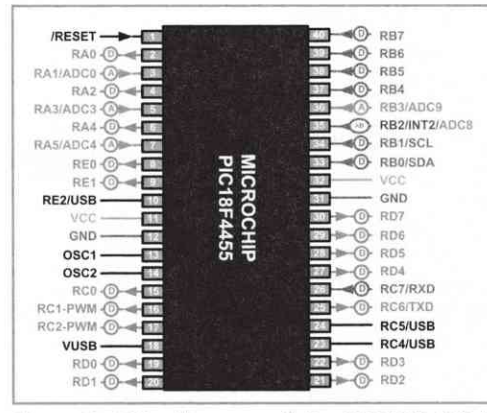

Figure 2 This diagram of the PIC18F4455 is purposely simplified, showing only the actually used functions of the pins of the PIC. D stands for 'Digital I/O' and A for 'Analogue input'.

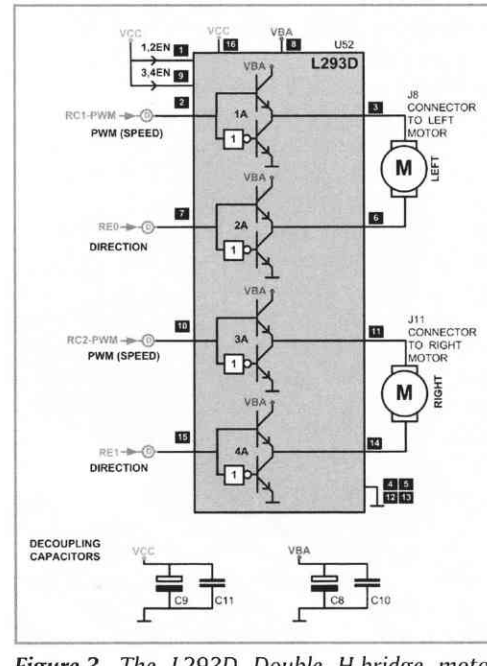

Figure 3 The L293D Double H-bridge motor driver circuit.

Driving DC Motors

The two DC motors with separate gearboxes are powered by a classic L293D IC with two full H-bridges, see **Figure 3**.
The direction and speed of each motor can be programmed separately in Flowcode and this makes the buggy capable of performing the craziest moves you can imagine.

As you can see on the schematic, the L293D uses four PIC outputs for its control. Two outputs (RE0 and RE1) set the direction while two (hardware generated) PWM signals at RC1 and RC2 govern the speed of each wheel.

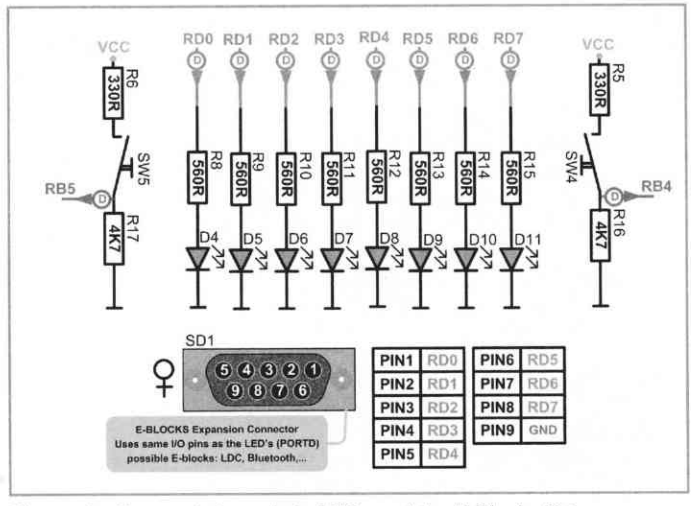

Figure 4 *Two switches, eight LEDs and the E-Blocks D-type connector.*

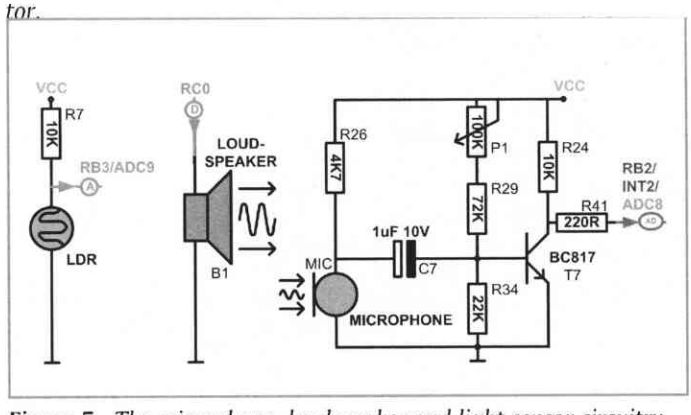

Figure 5 *The microphone, loudspeaker and light sensor circuitry.*

LEDs, Switches and E-blocks Expandability

The schematic of the I/O hardware is shown in **Figure 4**. The eight LEDs and two switches at the front of the Buggy will come in handy for your first steps with Flowcode and will prove to be very useful when debugging your more complex programs on this 8-bit PIC microcontroller.

In parallel with the eight LEDs, Formula Flowcode has an E-blocks connector. This will give the users the capability of very easily expanding the Buggy with standard E-blocks like LCD, Bluetooth and many more.

Sound I/O and light sensor

The buggy can react to sound (hand claps) using the amplified microphone circuit connected to RB2. As shown in **Figure 5**, this sound sensor may be used as a digital input, an external interrupt or even as an analogue input. The buggy also includes a simple high impedance speaker that can be used to generate frequencies between 100 Hz and 17 kHz. At the front of the buggy is a small forward facing light sensor that allows the vehicle to measure light intensity in the forward direction.

Infrared distance measuring circuit

The buggy also includes three distance sensors on the front, left and right of the main circuit board. **Figure 6** shows the circuit diagram.

A single sensor is a combination of an IR LED that emits IR light, and an IR sensitive photo transistor producing an analogue voltage that's inversely proportional to the amount of IR light reflected.

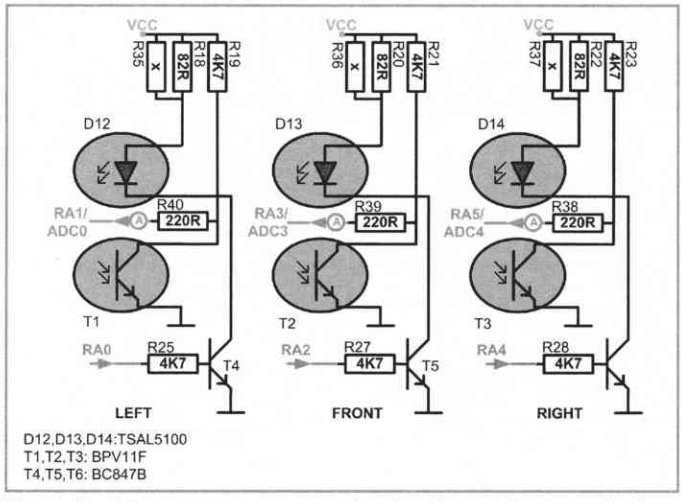

Figure 6 *Distance measurement circuit on board the Formula Flowcode Buggy.*

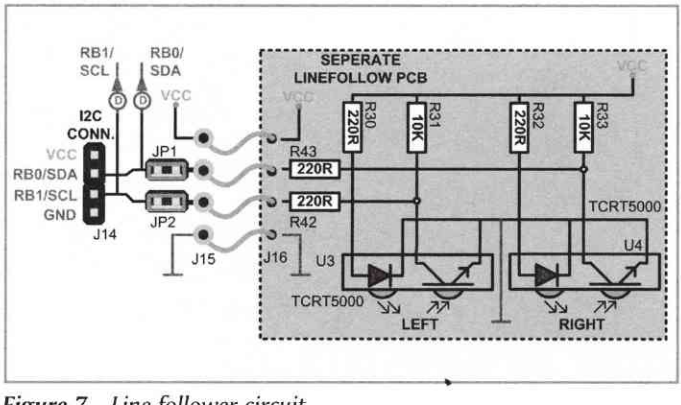

Figure 7 *Line follower circuit.*

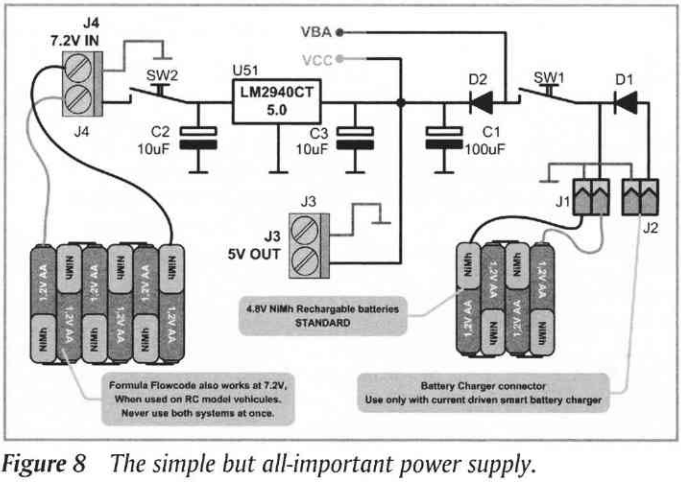

Figure 8 *The simple but all-important power supply.*

Line following circuit

Also on the front of the buggy is a small daughterboard that contains two I²C intelligent infrared transceivers capable of detecting black and white surfaces at distances from 1 mm up to 6 mm without any error. The circuit is shown in **Figure 7**. These sensors allow the buggy to follow lines on a table or mat.

Power supply

This section of the circuitry is shown in **Figure 8**, using a combination of pictorial elements and of course the schematic. The small chassis is powered from four NiMH AA rechargeable batteries which give between 4 and 6.2 V. The circuit board also has space for additional components that allow you to connect larger batteries to the chassis, using a 5 V regulator.

Additional circuitry

In addition to the standard circuitry discussed above, the chassis is also fitted with a fair number of expansion connectors. These include I²C expansion, wheel encoder inputs, servo inputs, and much more.

Using Formula Flowcode

By now you should have a good idea of how the hardware works and what makes it tick. But how is it programmed, how is it used, and how do students know what to do?

The Formula Flowcode buggy is supplied with a

free (reduced functionality) copy of Flowcode – a graphical software language for microcontrollers. Flowcode allows users to directly download a program to the buggy using the USB lead. On removing the USB lead and pressing the reset switch, the buggy starts to run the program.



Figure 9 *Typical line following exercise.*

Courseware for pole position

The new version of Flowcode released with the buggy includes a pulse-width modulation (PWM) component for controlling the motors. As Flowcode is now available in around 10 languages (including Chinese) it will be usable by children as young as 12 virtually anywhere in the world.

This robot buggy is officially named 'Formula Flowcode', after the Formula Ford where the cars are all identical and winning only comes down to the driver's skills. In this case, winning comes down to the programming skills of the user.

As you might expect there are a number of separate 'courses' that users have to complete to increase their skills level. These courses start with getting a single LED to light up, and finish with full maze solving using a custom made chassis, using wheel encoders and what have you.

This is the really clever idea behind Formula Flowcode – it is great for complete beginners to robotics and electronics, and it will also provide a considerable challenge to those with relevant degrees in electronics and computer science.

The courses include such subjects as:

- Light a single LED;
- Make a 'NightRider' effect on the LEDs on the front of Formula Flowcode;

Pit stop! How can you get involved?

The Formula Flowcode robot buggy was purposely developed to motivate people to want to learn more about robotics and electronics – from 12 year old pupils who have a curiosity about the subject, right up to those enjoying retirement and still wanting to learn and keep mentally active. In the USA the First Robotics programme (*www.usfirst.org*) has been quite successful at stimulating engineers in industry to collaborate with young people to compete in robotic events. We hope to achieve something similar here; by providing a low cost hardware software robot, providing online support and quality curriculum. By running workshops and competitions we hope people will be captured by electronics. If you feel that our aims are worthwhile and achievable, if you want to take part in this programme, or if you are interested in the competitions and workshops then please let us know. If the level of interest is high then we can write more articles and issue special 'courses' for Elektor readers.

The author and his colleagues can be contacted by email on *barthuyskens@scarlet.be*, or through Elektor.

You can purchase a Formula Flowcode buggy from the Elektor Shop at a cost of £ 85 or € 125 including VAT.

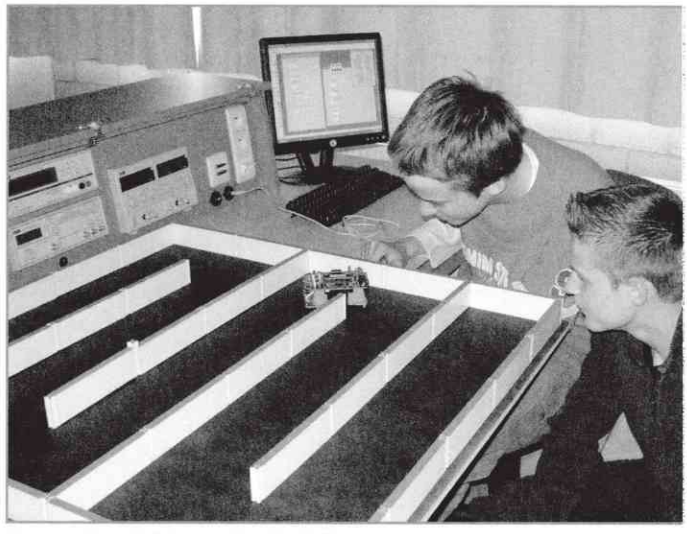

Figure 10 Solving a simple 'left' maze.

These courses are all explained to students in the form of task-based worksheets.
Some are competitive, in terms of time or function, and will form the basis for regional competitions that we hope will be run by Elektor and educational institutions across Europe.

Other courses are just for fun or in-depth exploration of programming and hardware features.

Support for all of this will be available on Matrix Multimedia's website forum accessible via where users ask each other questions and swap programs. We also plan to run workshops on Formula Flowcode to get young people up and running and interested in technology.

- Develop a program that uses the on-board light sensor to allow Formula Flowcode to steer towards the light from a hand held torch;
- Develop a program that allows Formula Flowcode to 'dance to the music'. Every time you clap it must turn through 90 degrees;
- Develop a program that allows Formula Flowcode to follow a 2-metre long line made up from a black insulating tape. Beat a time of 30 seconds;
- Develop a program that allows Formula Flowcode to solve a 64-cell maze using the left-hand wall following technique.

In addition to this Elektor will be publishing a book which will take users through the process of developing programs and additional circuitry for the buggy.

This will form a complete suite of tutorials which will teach technology to budding electronics enthusiasts up to 16 years of age.

(070323-I)

263 Whiskers on Robots

SENSORS

Alexander Wiedekind-Klein

Sometimes sophisticated sensors based on video cameras, infrared or ultrasound are not quite up to the job, and we have to resort to somewhat more primitive switch-type sensors. These work like an animal's whiskers (or 'antennae' on insects), detecting nearby objects in the environment. When disturbed, a sensor sends a pulse to the robot to indicate that an object is present.

Sensors that are both sensitive and robust can be made using steel guitar strings. The material is very flexible as well as being conductive. The idea could not be more simple:

we pass the wire through a metal tube, and when the wire is in contact with an object in the environment it bends and the two make electrical contact. Responsiveness and sensitivity depend chiefly on the length and stiffness of the piece of guitar string used. Do-it-yourself construction should not present great difficulties even to the most mechanophobic reader: see **Figure 1**. We proceed as follows.

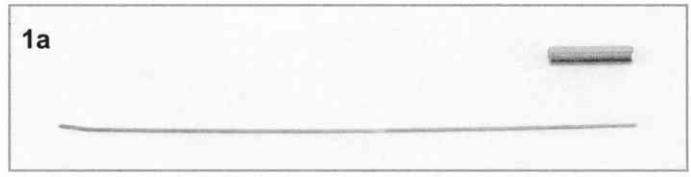

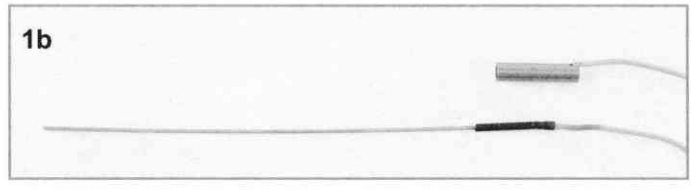

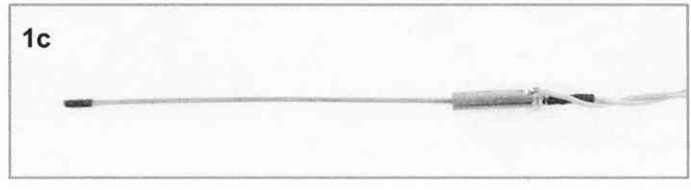



1 Cut a length of steel guitar string (8 cm to 10 cm is enough), and saw off a length of about 2 cm of 4 mm diameter brass tube. Deburr the edges inside and out.

2 Solder a wire to one end of the brass tube and another wire to the end of the guitar string. Insulate the joint on the guitar string using heatshrink tubing.

3 Slide the string into the tube so that only about the first 10 mm from the end of the tube is insulated. Fix the string centrally within the tube using hot-melt glue. Be careful not to allow too much glue to run down inside the tube.

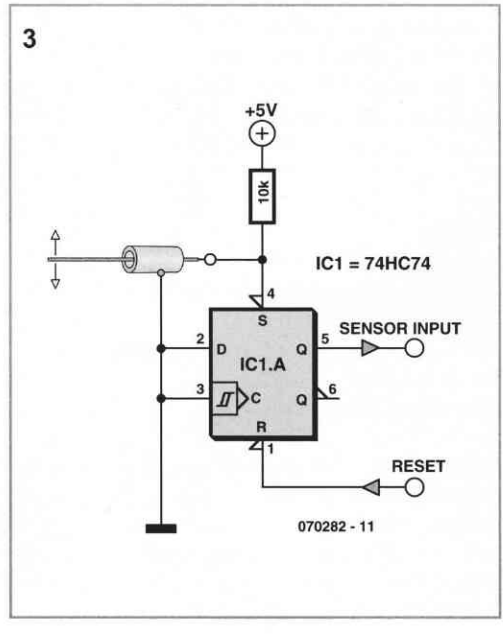

The result should look like **Figure 2**. Of course, you are free to experiment with variations on this construction!
As we have described it this robot whisker is essentially just a simple switch contact. To ensure that even the gentlest collision does not pass unnoticed we recommend that you use the whisker to trigger a flip-flop as shown in **Figure 3**. The microcontroller in the robot can then read the state of the flip-flop at its leisure and then reset it.

(070282-I)

264 3 Amp PWM DC Motor Controller

Rajkumar Sharma

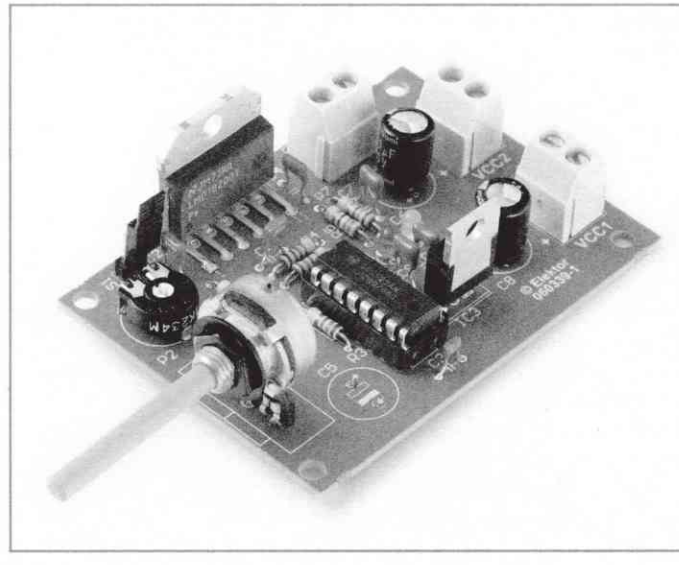

This circuit is intended for motion control applications, a common occurrence in robotics! This affordable PWM DC Motor controller can control any PMDC motor specified at 12 V to 30 V and 3 Amps max. Motor direction is controlled with a slide switch and motor speed, with an ordinary potentiometer.

The circuit diagram in **Figure 1** shows ICs type LMD18200 and SG3525 at the heart of the circuit. The SG3525 is a pulsewidth modulator control circuit and the LMD18200, an H-Bridge to enable the motor to be run in both directions.

The SG3525 affords frequency control and duty cycle control. The oscillator frequency is determined by the components attached to pins 5 and 6. Preset P2 serves to adjust the frequency between 1.16 kHz and 35 kHz. Although it is generally recommended to stay above 20 kHz as otherwise the motor will produce audible sound, in some cases that's just not possible depending on the motor you're using. Pot P1 determines the duty cycle, which can be adjusted from 10% to 100% to effectively control the motor speed.' Internal transistors are used in a such a way as to obtain 100% duty cycle. The internal driver transistors are grounded by pins 11 and 14 for alternate oscillator cycles. Pin 16 of the IC is the REF V terminal, which

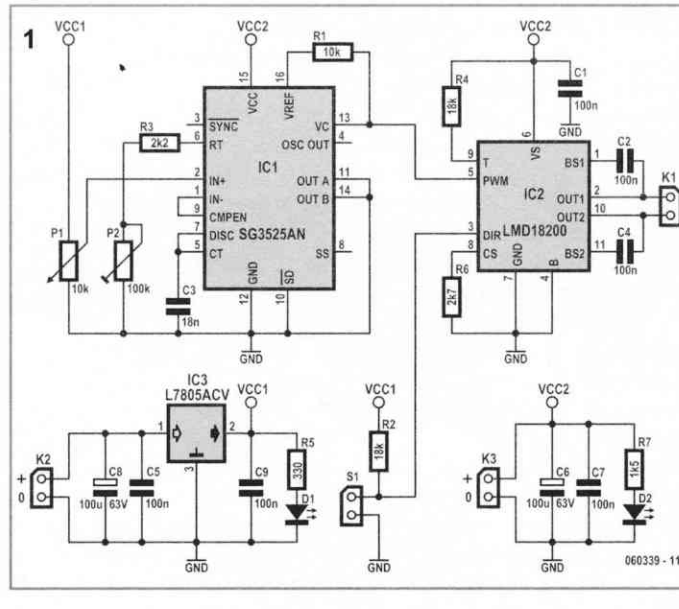

Features

- Motor supply voltage 12 V to 30 V DC
- Delivers up to 3 amps continuous output
- PWM frequency adjustable from 1.16 kHz to 35.1 KHz
- PWM continuously adjustable by pot
- Duty cycle 0 to 100%
- Direction control by switch
- Shorted load protection
- Thermal shutdown
- No SMD components
- No microcontroller

gives 5 V out. Resistor R1 feeds the supply voltage to an internal open-collector transistor for TTL-level PWM output.

Moving on to the LMD18200, slide switch S1 (on header S1) governs the Direction control input (pin 3) to change the direction of the motor from cw to ccw or vice versa. R4 is connected to thermal flag pin T (pin 9), which is not used here. The function may be used to flag a warning when the chip temperature is 145 degrees. The IC is automatically shut down when 170 degrees C is reached.

Pin 8 of the LMD18200 is the current sense input. R6 connects this pin to ground. The Brake input (pin 4) is hard wired to ground. C2 and C4 at the motor output are 'bootstrap' capacitors. Pins 2 and 10 are the H-Bridge outputs powering the DC motor.

In the power supply section, capacitors C5 through C9 serve to suppress noise on the two supply rails. The L7805ACV voltage regulator for the logic supply accepts any unstabilised DC voltage between 7.5 V to 18 V applied to K2. The other supply connector, K3, is for the motor power. The capacity of the motor supply of course depends on the motor used.
If the motor is specified at 12 V then R7 should be 1 kΩ, and if it is 24 V then 1kΩ5 should be fitted. If you want to use a heavy-duty motor consuming more than about 1 A, it may be worthwhile to strengthen the copper tracks to/from K2/K3 with lengths of 1.5 mm^2 solid copper wire.

2

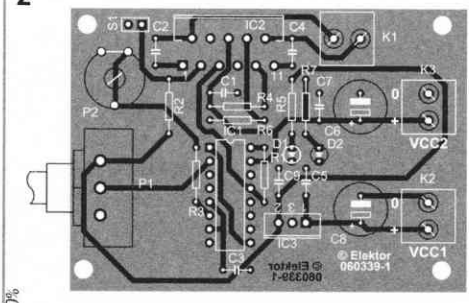

COMPONENTS LIST

Resistors
R1 = 10 kΩ
R2, R4 = 18 kΩ
R3 = 2kΩ2
R5 = 330 Ω
R6 = 2kΩ7
R7 = 1kΩ5
P1 = 10 kΩ potentiometer
P2 = 100 kΩ preset

Capacitors
C1, C2, C4, C5, C7, C9, = 100 nF
C3 = 18 nF
C6, C8 = 100 μF 63V

Semiconductors
D1, D2 = LED
IC1 = SG3525AN
IC2 = LMD18200
IC3 = L7805ACV

Miscellaneous
K1, K2, K3 = 2-way PCB terminal block, lead pitch 5mm
S1 = slide switch
PCB, ref. 060339-1 from *www.thepcbshop.com*

If you want to interface the driver with a source supplying 0-5 V, simply remove potentiometer P1 and apply the analogue voltage to pin 2 of the IC.
Figure 2 shows the PCB designed for the driver, which should fit many applications at

crucial locations in a robot. After all, most forms of motion of a robot will require a motor of some kind.
The board has been designed for compactness whilst using leaded components only, i.e., no SMDs in sight here. The copper track layout and component mounting plan are contained in free download no. 060339-1.zip from our website.

(060339-I)

265 Serial Interface for the Propeller

MICROCONTROLLERS

Simple and inexpensive

Luc Lemmens

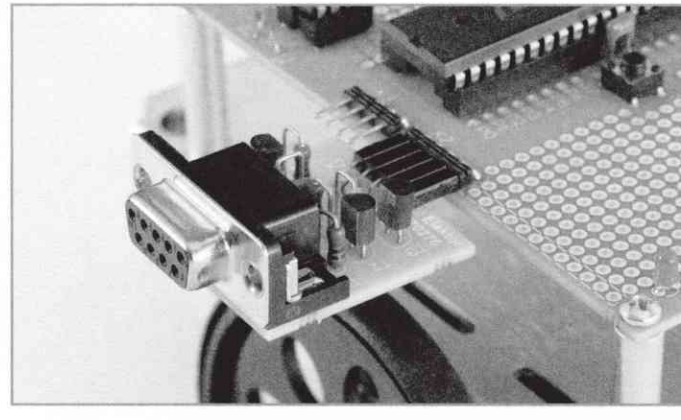

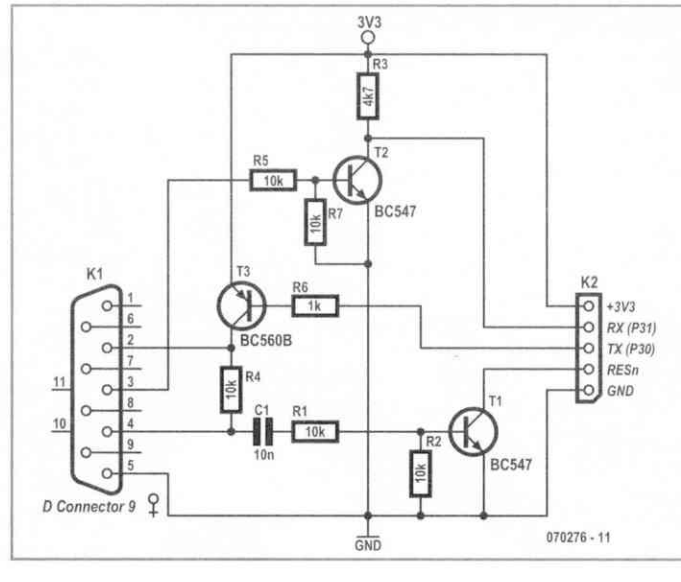

The Propeller prototyping board described elsewhere in this issue needs a programming interface, just like the board available from Parallax. The manufacturer offers the Propeller Plug and the Propeller Clip for this purpose. They can be used to link the board to a PC via a USB port. These mini-boards are fitted with an FTDI FT232 IC, which has appeared quite regularly in the magazine.

The difference between the Plug and the Clip is in how they connect to the processor board. The Plug connects to a 4-way SIL header, while the Clip connects to four solder pads at the edge of the board. The latter type of connection was used in the first version of the Propeller demo board, and it is actually no longer relevant. The Propeller Plug is the right USB interface for the prototyping board from Parallax and our prototyping board. This little board costs around twenty euros, but if you want to save a bit of money and prefer to use the old faithful RS232 interface (and your PC has a serial port), you can build the simple serial interface described here.

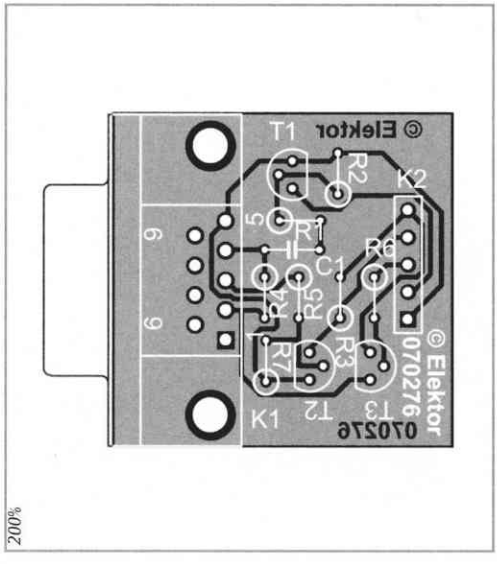

COMPONENTS LIST

Resistors
R1, R2, R4, R5, R7 = 10 kΩ
R3 = 4kΩ7
R6 = 1 kΩ

Capacitors
C1 = 10 nF

Semiconductors
T1, T2 = BC547
T3 = BC557

Miscellaneous
K1 = 9-way sub-D socket (female), angled pins, PCB mount
K2 = 5-way SIL socket
PCB, ref. 070276-1 from *www.thepcbshop.com*

Three garden-variety transistors, a handful of resistors, and a capacitor are all it takes to let the Propeller communicate with a PC via the serial port. The interface actually consists of nothing more than three inverters and level shifters, which enable the Propeller board (which is powered from a 3.3-V supply) to talk to the COM port of a PC, which operates with ±12-V signals.

Connector K2, which provides the link to the Propeller board, has intentionally been laid out with the signal lines in the same sequence as on the Propeller Plug, but here we need an additional line for the 3.3-V supply voltage. This makes it possible to use the interface board with the Parallax board as well. However, in that case a small modification is necessary for the supply voltage connection.
We have designed a small PCB for this circuit, but of course it's no problem to build it on piece of perforated prototyping board instead. With a bit of effort, you can probably even make it so compact that the entire circuit fits in a plug housing for a 9-way RS232 connector.
Fortunately, when you use this interface you don't have to worry about configuring all sorts of settings (baud rate, number of bits and so on) – the Propeller Tool development software does all this for you. Use a 1-to-1 cable for the serial link (not a crossover cable or null modem cable).

(070276-I)

266 Deep Discharge Protection for Rechargeable Cells

POWER SUPPLIES, BATTERIES AND CHARGERS

Tilman Küpper

With this circuit built into the power supply of a battery powered device, it will prevent the rechargeable cells from being completely drained when you forget to turn the equipment off. When the battery voltage drops below a pre-set limit (9.5 V in this example) the circuit will automatically disconnect the battery.
Power is re-connected when the voltage rises above an upper threshold level (10.5 V here),

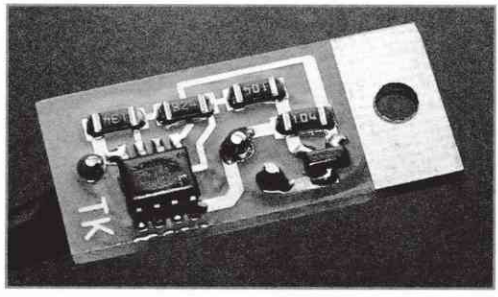

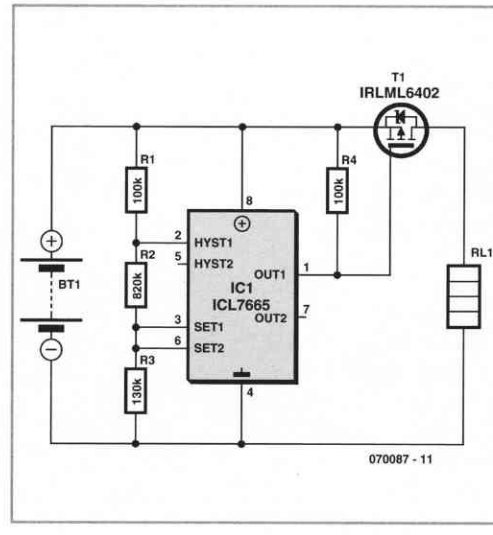

Web Links
Datas heet IRL7665:
www.intersil.com/data/fn/fn3182.pdf
Data sheet IRLML6402:
www.irf.com/product-info/datasheets/data/irlml6402.pdf

this will typically occur after the equipment has been plugged into its recharging station. The circuit is designed to use as little power as possible.

The ICL7665 from Intersil forms the heart of the circuit. This IC contains two comparators together with a voltage reference and consumes just 3 μA. The circuit only uses one of the comparators, the values of resistors R1 to R3 shown in the diagram will cause the circuit to switch at the levels mentioned above. The comparator output switches the P-channel MOSFET T1 which in turn controls power to the load R_{LOAD}.

The switching threshold levels and hysteresis can be changed by using different values of resistor for R1 to R3. Increasing the value of R3 to 300 kΩ will raise the upper threshold level to 12.5 V. The ICL7665 data sheet gives examples of suitable resistor values that can be used here.

The PCB layout uses SMD components so the finished circuit takes up very little space when installed in the equipment. A fine-tipped soldering iron should be adequate to mount the components and there shouldn't be any problems provided you do not choose to use very small resistor packages.

Once the circuit has been tested the entire PCB can be protected by encapsulating it with a short length of heat shrink sleeving.

(070087-I)

267 TriBot

MECHANICS

Abraham Vreugdenhil

This is a triangular robot with three wheels that can only rotate in one direction. Despite this it can make its way towards a light! That's TriBot. The robot has three LDR light sensors, which are used to determine which side faces the brightest light. It also has three antennae that are used to detect when it is about to bump into something.
For the processor we used the 89C2051 by Atmel, a nice processor at a reasonable price,

which has a 2 k program memory. It is also possible to use a different processor, as long as it has at least nine I/O pins: three for the LDRs, three for the antennae, three for the motors and, if they're available, three for the LEDs.

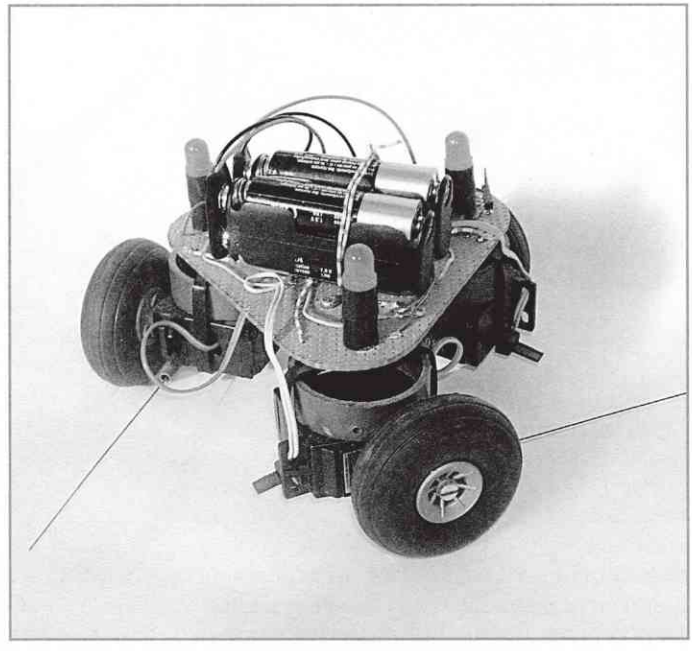

The measurement of the light intensity via LDRs is implemented using the LDRs in series with a 1 nF capacitor and calculating the RC time-constant. The value of the LDR (which is affected by the light intensity) changes the RC time-constant of this network (if you refer to the program it will make the working clearer).
The compiler used here (BASCOM-LT or BASCOM-8051) has a function that does all the hard work for us: GETRC(pin number).
The antennae are made of copper pipes with a piece of spring-steel wire through the centre. They are separated from each other with a length of isolated wire. When the spring-steel wire is moved it makes contact with the copper pipe, which is detected by the processor.

The motors are old servos, with all the internal electronics removed. The motors are driven directly via a transistor. They can only be turned on or off and can rotate in only one direction.

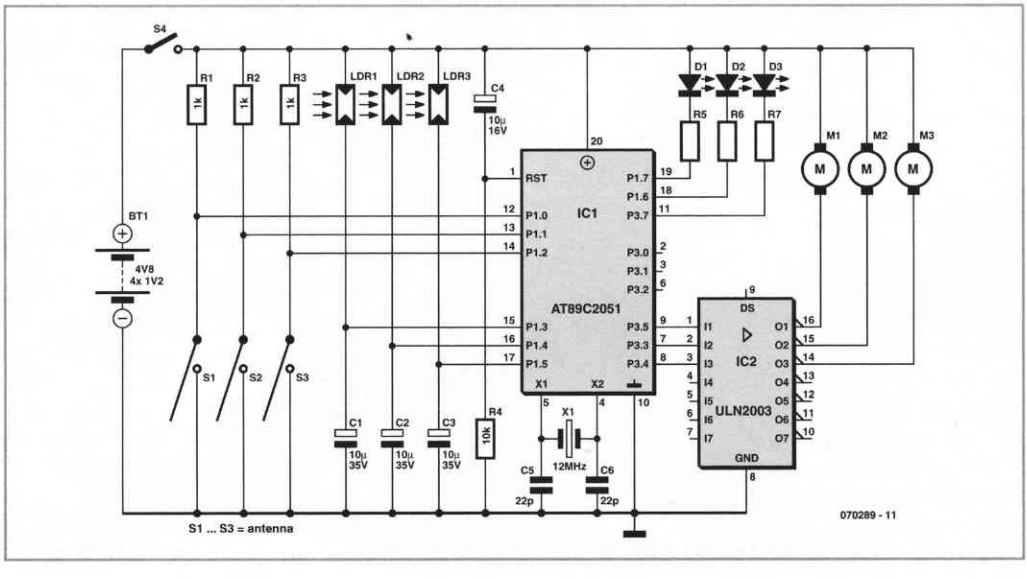

When all three motors are turned on at the same time the robot will rotate around its axis. If we then turn one of the three motors off, TriBot will rotate about the stationary wheel. Turning on the stationary motor and turning off another one will cause the robot to 'stagger' in a fairly straight line towards its destination.

To add some visual appeal we've added three 8-mm LEDs. When TriBot is powered up they show a moving pattern and the motors all turn on momentarily (as a selftest). The LEDs are connected in such a way that the LED lights up near the motor that is turned off.

Using three motors to propel the robot in circular motions isn't exactly the most efficient method of travel. (In that case we should have used omnidirectional wheels instead of normal rubber ones.) But that wasn't a requirement for the design of this robot. It just had to look nice and behave in an amusing way.

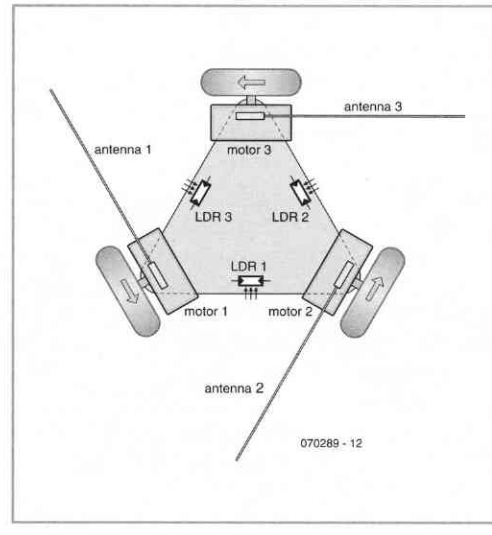

The program for TriBot can be downloaded from the Elektor website as file number 070289-11.zip.

(070289-I)

268 Removed Pulse Detector

COMMUNICATIONS

Hesam Moshiri

A detector to flag missing pulses is among the more important circuits in robotics.
When pulses are applied to the circuit shown in **Figure 1**, the output signal will be continuously High (i.e., nearly V_{CC}) as illustrated in **Figure 2**.

For the detector to operate, certain conditions in respect of pulse timing must be met. With reference to the timing diagram shown in **Figure 3**, the values of components R and C in the circuit may be calculated from

$$\tau = 1.1 \cdot R \cdot C$$

taking into account that

$$1\ k < R < 1\ M\Omega \text{ and } M < \tau < N$$

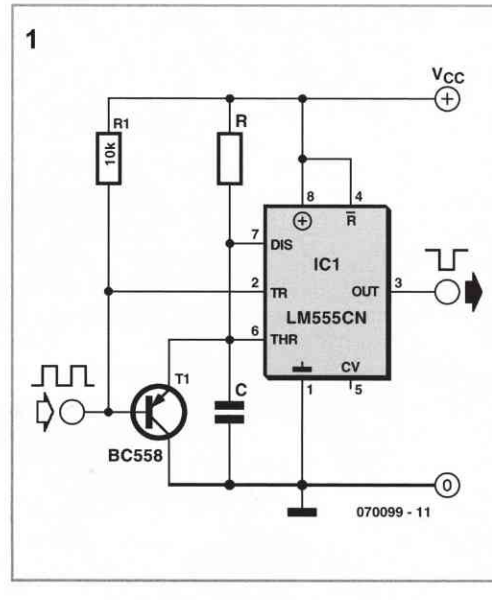

When a correct signal is being applied to the input (Figure 2) the circuit will be triggered by another pulse before the constant time (τ) expires. Therefore the output signal remains High.

If one or more pulses are missing, for example, owing to a fault, a bash on the head from refbot Mathilda, or simply bad reception on the remote control channel, the output signal drops Low briefly.
The resultant flag signal can be sensed by another circuit, for example, a microcontroller or another sensing that acts on the interruption in the pulse stream. If the worst comes to the worst, the autopilot should be switched on!

(070099-I)

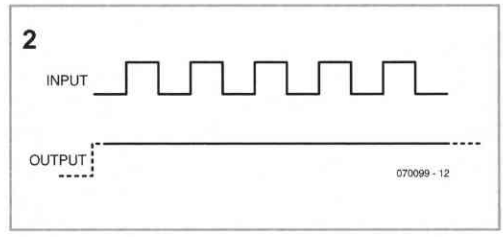

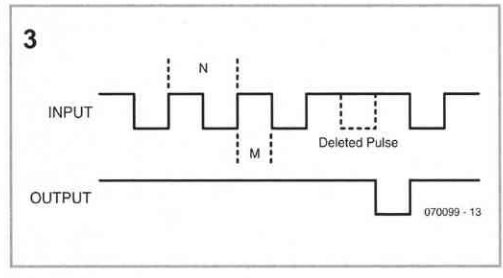

269 R8C Measures Negative Voltages

TIPS & TRICKS

Sven van Vaerenbergh,
UH Brussels, Radio Therapy Dept.

The author had to design a monitor circuit for the so-called Hercules Table (an electrically movable platform) at the University Hospital in Brussels that would watch several operating voltages and could stop the table in case of emergency.

The movement of the platform (up/down) is done with a DC voltage between +8 V and –8 V, where the magnitude of the voltage determines the speed and the polarity determines the direction. There are also a number of fixed voltages that need to be monitored.

An R8C module from Elektor Electronics was selected for the implementation of this project, because it is very easy to connect an LCD module to it and because it has a good A/D converter with 10-bit resolution on board.

The connection for the LCD (2×16 char.) is identical to that of the application board in *Elektor Electronics* (March 2006, page 38). In addition to the controller, a multiplexer of the type ADG 408 is used. This is required because we need to measure multiple voltages.

An unusual requirement for this project is that both positive and negative voltages need to be measured. Normally, the A/D converter of the R8C can only measure voltages between 0 and 5 V. The solution was found by using a symmetrical voltage for the R8C module, that is, ±2.5 V. These voltages are generated by an LM317 and an LM337.

We normally connect ground (V_{SS}) to pin 5 of the R8C module. In this case that becomes –2.5 V. In this way we can measure voltages from +2.5 V to –2.5 V. The only places in the schematic that are connected to ground are the voltage dividers for the two voltage regulators (R1 to R4) and the voltage dividers (R5 to R16, R19 and R20) for the signals to be measured (available at connector K1, where all the important signals from the Hercules Table are available).

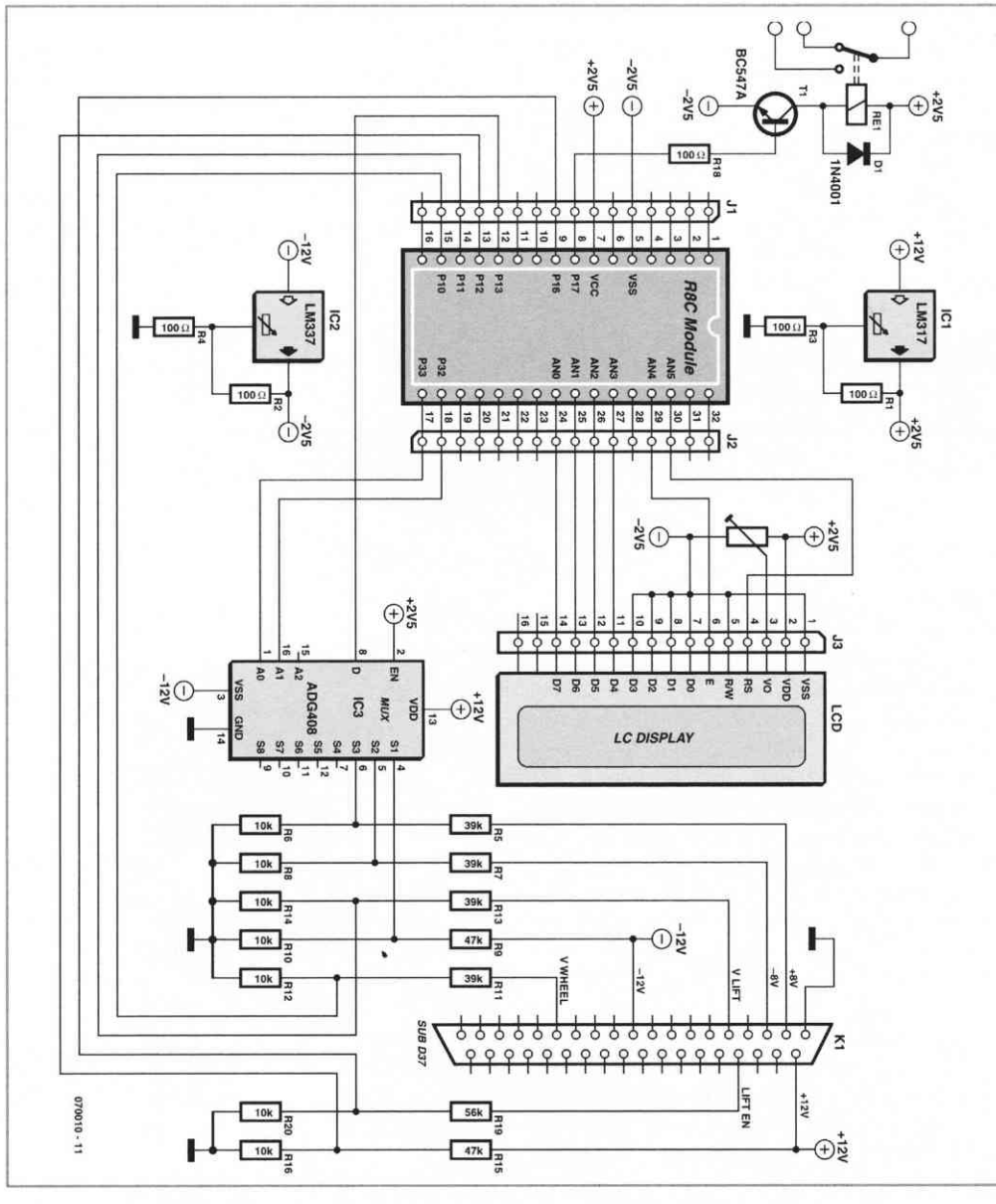

We can see that the schematic also contains a relay that can be switched by the R8C to immediately stop the table movement. This is optional.

Now we have to take special care when we have negative voltages. The resolution of the 10-bit A/D-converter in the R8C amounts to 5 V/1024 = 0.00488 V per bit. Because of the symmetrical power supply, the converter will give an output value of 512 when the input voltage is zero volts. We can display a minus sign on the LCD when the value is smaller than 512.
In C code it looks like this:

```
if ( u < 512 ) // less than 0,
                  then minus sign
```

```
{
lcddata (45);
}
```

We also have to adjust the voltage levels in software, because these have been lowered by the 6 voltage dividers. We also have to drive the multiplexer. In C code it looks like this:

```
pd3 _ 3 = 1; //port 3.3 as output
p3 _ 3 = 0; //port 3.3 => for
  channel selection via analogue MUX
pd3 _ 2 = 1;
p3 _ 2 = 0; //port 3.2 => for
  channel selection via analogue MUX
```

Three channels are directly connected to the A/D-converter. One channel is multiplexed for the voltages of +8 V, –8 V and –12V.

(070010-I)

270 Walking Works!

MISCELLANEOUS ELECTRONICS AND DESIGN IDEAS

C. Tavernier

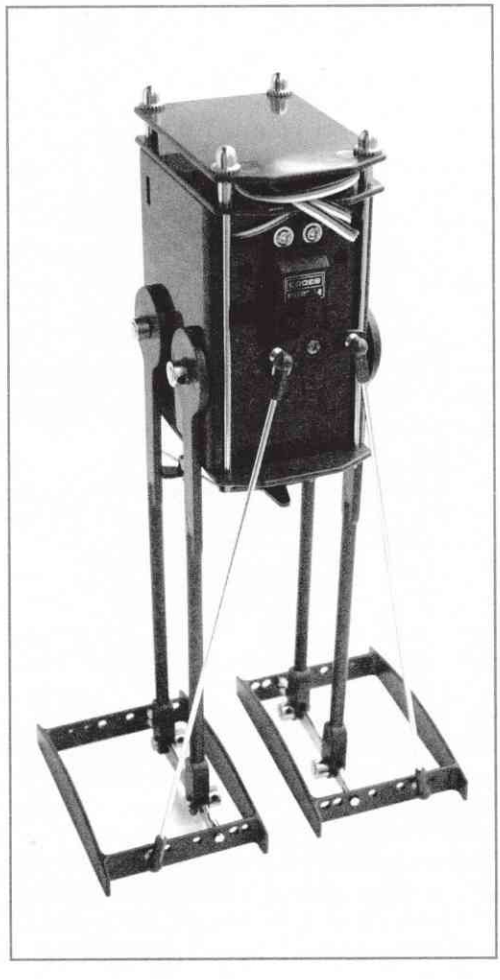

Although the majority of robots built by amateurs move around using wheels or caterpillar tracks, two categories occupy a place apart because of the spectacular way they move: the hexapod robot, also called spider robot (though spiders actually have eight legs!), and the walking robot. It may seem relatively easy to make the wheels turn using motors, which is the sole requirement in a conventional mobile robot, but reproducing walking, be it of an insect in a hexapod or of a human in a walking robot, might appear markedly more difficult.

In this article, we'll see how to do this for a walking robot, which we've opted to buy in kit form for the mechanical part. Although these days any good handyman can build a 'conventional' mobile robot base, i.e. with wheels or tracks, the mechanical construction of a walking robot is much trickier, mainly because of the particular action involved in walking, which we'll be describing in a moment.

To our knowledge, there are currently only two mechanical kits for walking robots sold at an affordable price: the famous Toddler from Parallax (*www.parallax.com*) and, closer to home, the Yeti from Arexx Engineering (*www.arexx.com*).

As these two robots operate in virtually the same fashion, in terms of the principle of their walking, we settled on the kit for the Yeti, distributed by Lextronic (*www.lextronic.fr*), as he is slightly cheaper than his brother from Parallax. But everything we say about one is going to be true, with only minor variations, for the other too.

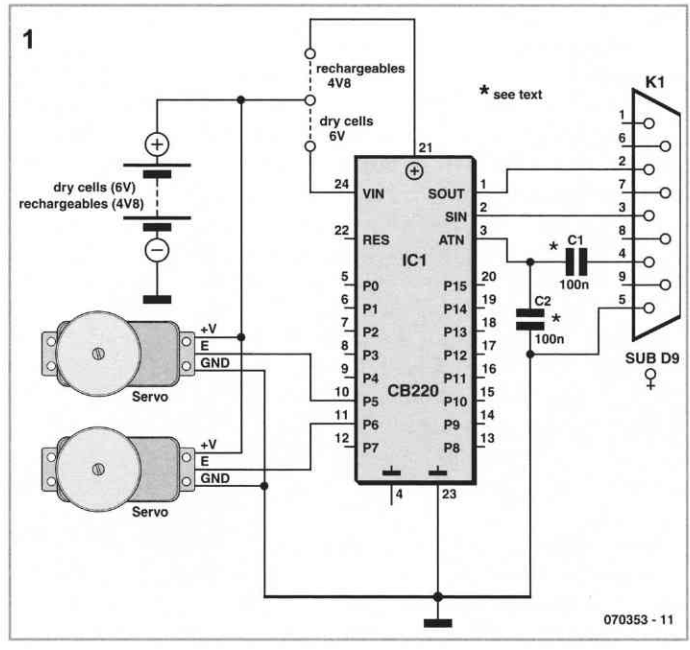

So, these walking robots both consist of two rigid legs, in the sense that they don't have a central articulation like our knee. They consist of two arms (that's a bit much for a pair of legs!) arranged to form a parallelogram, and have a foot articulated either side of the plane that forms. Although it might not seem very much, all it actually takes to make such a robot walk is two normal – i.e. unmodified – radiocontrol servos. The first, clearly visible at the front of the robot, controls the feet by means of two long connecting rods, while the other, fitted under the robot's belly, acts on the rear arm of each leg. So having thus set the scene, let's now see how such a figure is able to walk.

To make it easier to follow our explanation, we're going to refer to 'right' and 'left', but obviously this is purely relative. When the robot is at rest, both feet are flat on the ground alongside each other. Then the foot servo turns in a direction that will make the robot's body lean over onto the left foot, which obviously has the effect of lifting the right foot off the ground. Then the leg servo turns too, making the right leg, free to move as its foot is now off the floor, move forward. Then the foot servo turns in the opposite direction, making the robot's body lean over onto the right foot, lifting now the left foot off the floor. The leg servo rotates again to make the left leg, itself now free to move, advance – and thus ends the first step.

As you will note from reading this, or if you have already watched the videos available on both the Parallax website for the Toddler and on the Lextronic site for the Yeti, the robot is actually in a constant state of near imbalance throughout its walk, which can only work correctly if the robot's weight is correctly distributed... and if the servo movements are neither too abrupt, nor too large in amplitude.

Even though these walking robot kits are also available with electronics chassis included, sometimes very elaborate as in the case of the Yeti with an ATMega8 processor from Atmel and its C compiler, a simple Basic Stamp II or a Cubloc CB 220 is enough for taking your first steps (literally as well as figuratively!).

As shown in the figure, which applies to both these microcontrollers that are, don't forget, pin-compatible, apart from the microcontroller itself, no other active components are required to make our robot walk.

The servo control inputs are connected from two parallel ports which can be any ones in the case of the Basic Stamp, but must be P5

and P6 in the case of the Cubloc CB 220, as its PWM instructions only work on these two.
Capacitors C1 and C2 call for a comment: C1 and C2 only need to be fitted if using a BS II. If using a CB 220, C1 will be replaced by a wire link, and C2 will not be fitted, its two pads being simply left empty.

All the rest is just a matter of programming, based essentially around the PWM instruction in the case of the Cubloc and around PULSOUT in the case of the Basic Stamp. As you will have gathered from the explanation above, to make our robot walk, all we have to do is make the servos turn alternately in one direction or the other, in a well-defined sequence.

We are offering you two complete source listings for making our robot walk, one for Basic Stamp II and one for Cubloc, on download from the Elektor website or from the author's own site (*www.tavernier-c.com*). Here are just a few comments to prove to you how simple they are and enable you to adapt them easily to your own needs.
Let's start by recalling that in the Cubloc the instruction PWM is used as follows:

```
PWM port, ratio, period
```

This generates on the corresponding port (0 for P5 and 1 for P6) a PWM signal whose duty cycle is defined jointly by 'ratio' and 'period'. The advantage of the Cubloc is that this instruction lets us generate the relevant signal continuously, as soon as it has been called at least once.
In the case of the Basic Stamp, the instruction PULSOUT is used in the following way:

```
PULSOUT port, duration
```

This generates a pulse on the corresponding port for a period equal to 2 μs multiplied by the value of the 'duration' parameter. The drawback to PULSOUT compared with PWM is that this generation is not repetitive. So if we want to generate repetitive pulses, we need to employ loops, making the Basic Stamp version of the program a little more complicated compared with the Cubloc version.
Lastly, let's remember that a servo takes up the rest position when it receives 1.5 ms pulses, and moves towards its end positions in one direction or the other for pulses of 1.0 ms or 2.0 ms respectively.

From this point on, it's easy to follow one or other of the suggested listings. To put the robot's feet into the rest position, for the Cubloc we write:

```
PWM 0, 3150, 32768
PWM 1, 3150, 32768
```

And for the Basic Stamp II :

```
FOR Pulses = 1 TO 100 STEP 5
   PULSOUT TiltServo, 750
   PULSOUT StrideServo, 750
   PAUSE 25
NEXT
```

In both cases, this causes 1.5 ms pulses to be generated for both servos, hence placing them into the rest position. Note that, in the case of the Cubloc, it is necessary to adjust the 3150 parameters so that they take the servos correctly to the rest position, while for the Basic Stamp, it is necessary to adjust the two 750 parameters for the same purpose.
To lift one foot, we will therefore write for the Cubloc:

```
FOR Position = 3150 TO 2850 STEP -1
   PWM 0, Position, 32768
   DELAY 1
NEXT
```

And for the Basic Stamp:

```
FOR Pulses = 750 TO 620 STEP -5
   PULSOUT TiltServo, Pulses
   PULSOUT StrideServo, 750
NEXT
```

Note the increase in 'complexity' created by the fact that, unlike PWM, PULSOUT does not operate continuously. So we need to add into the Basic Stamp's 'lift foot' loop the genera-

tion of the pulses that will maintain the leg servo in the rest position. In the case of the Cubloc, this generation is taken care of automatically by the PWM instruction that originally put the servos into the rest position.
We'll leave you to analyse the rest of these two listings for yourself – as you can see, they are in fact nothing but a succession of the groups of instructions we've just been looking at, with numerical parameters each time appropriate for the pulses needed to move the servos into the required positions.
Before ending, let's just clarify that these two listings are extracts only. The Parallax one, originates from the Parallax website (*www.parallax.com*), from where we strongly recommend downloading the document entitled 'Advanced Robotics with the Toddler Robot' (available in PDF format) containing a very good survey of the various methods of programming the walk. For the Cubloc, the full



program may be found on the Lextronic website (*www.lextronic.fr*). We thank Parallax and Cubloc for their kind collaboration.

www.tavernier-c.com (070353-I)

271 CMUCam1 Vision System

SENSORS

Seattle Robotics give BoeBot (and other robots) vision!

Ken Gracey (Parallax, Inc.)

BoeBot is a little robot vehicle designed and marketed by Parallax Inc. [1]. Boe-Bot's intelligence comes from another Parallax product, the Board of Education (BoE) which in turn is based on their renowned BASIC Stamp. Both the robot proper and the BoE have been graced by many publications in the electronics press and on the Internet. Rightly so, as apart from their low cost the projects come with backup of a volume and level that make them perfectly suitable for use in schools and, in general, for learning about robotics [2].

For the CMUcam1 Vision System, Parallax teamed up with Carnegie Mellon University [3] through Seattle Robotics [4]. The product is however only available from Parallax and their distributors like Milford Instruments [5]. The CMUcam1 BoeBot package includes

1 A CMUcam1 mounted on an AppMod user interface board.

2 A printed user manual.

3 A CD-ROM that includes all demo programs.

The goal of the product is to give you as simple a plug & play experience as possible. Plug in the hardware, upload the demo code then press the buttons and watch your BoeBot use its new vision system to 'see' and respond to its environment.

Purpose

The CMUcam1 AppMod™ vision system consists of a CMUcam1 vision system mounted on a plug in AppMod board. Included on the

AppMod board is a simple user interface consisting of two buttons, eight LEDs and one piezo speaker. The user interface serves these three purposes:

1 A simple menu selection system which works with the included demo code to allow you to select and run one of eight robot vision demonstration programs.

2 Provide visual feedback from the LEDs as the demo programs run showing where the CMUcam1 is seeing the tracked target.

3 Indicate the colour of objects it sees by illuminating the corresponding LED (e.g., red LED for a red object).

With some clever circuitry on the AppMod board the two buttons, eight LEDs and one piezo speaker only require four I/O pins on your Basic Stamp2 thereby conserving I/O pins for other uses.

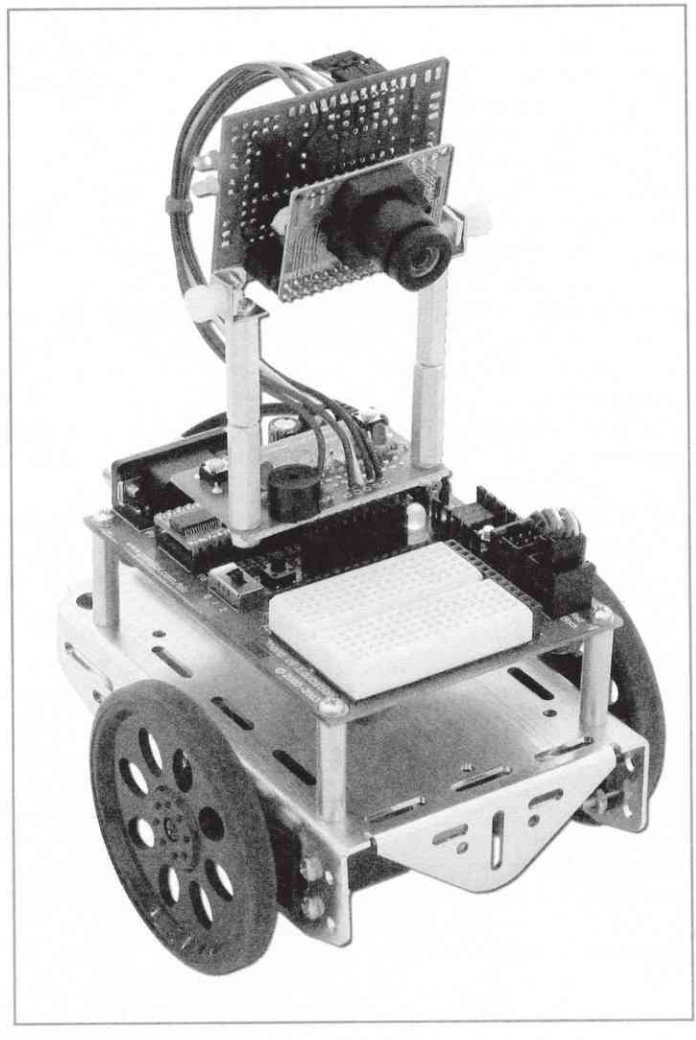

An 8-function demo

With the CMUcam1 AppMod Vision System plugged into the BoeBot AppMod connector the next step is to program the main demo code from the CD-ROM to the Basic Stamp2. The demo code has eight functions, each of which demonstrating a capability of the CMUcam1.

When you first turn on the BoeBot the eight LEDs on the AppMod interface board will flash several times, then the piezo speaker will beep indicating it is ready. Each function starts with one audible beep and stops with two beeps. The LEDs flash during each function in different patterns to let you know how that function is operating. The eight functions of t he demo comprise:

1 **Calibrate Lighting** – about 20 seconds are needed to allow CMUcam1 to calibrate to the ambient lighting conditions.

2 **Sample and Save Colour** – it takes about a second to lock onto the colour of an object held in front of the cam; the LEDs will flash and the speaker will beep twice when done. The colour values are saved in the Basic Stamp2 EEPROM.

3 **Track Colour** – the robot moves forward, backward, right and left to follow the colour of the object saved during function 2.

4 **Move & Avoid** – the robot will move forward and avoid objects using the vision sensor only. It works by sampling the colour range of the floor in front of the robot.

5 **Adaptive Tracking** – the robot locks onto the first colour it sees and tracks that colour (it only goes fwd, right and left, not bwd). If it loses the object for about five seconds it then locks onto the next colour it sees and tracks that until it loses that, etc.

6 **Line Following** – it is assumed a black line about 1.2 cm (.5 in.) wide is present on a white line tracking course.

7 **Finger Point and Move** – the robot will backup, turn right and turn left in relation to finger pointing. This is done with the CMUcam1 using the same downward facing angle as is used on all the other functions.

8 **Show Colour** – the robot will light up either all of the red, green or yellow LEDs in response to the colour of the object placed in front of it. This works well with 5-cm diameter coloured rubber ball or plastic block.

For best performance with all of the above functions, the tilt of the camera should be pointing down looking just in front of the robot.

Basic Stamp2sx and Basic Stamp2p

This CMUcam1 AppMod and demo code will also work with the more powerful 2sx and 2p versions of the Basic Stamp. Separate versions of the demo code for each Stamp can be found on the CDROM. The code changes are minor and related to the 2.5 times faster execution speed.

You can do more with the CMUcam1 and the 2sx and 2p Stamps due to their faster speed and larger memory. The Basic Stamp2 is limited to 9600 baud serial interface speed to talk to the CMUcam1 but the 2sx and 2p can both talk to the CMUcam1 at its maximum serial data rate of 115,200 baud. The CMUcam1 is switched to the 115,200 baud rate by removing two jumpers that can be found on its board. The higher baud rate means BoeBot can respond much faster to the vision system.

Table 1: Basic command set

Command	Parameter(s)	Description[1]
\r	none	The 'Enter' or 'Return' key. Set the camera board into an idle state.
GM	none (\r)	Get the Mean colour value in the current image.
L1	value \r	Control the green LED Tracking Light.
MM	mode \r	Controls the Middle Mass mode which adds the centroid coordinates to the normal tracking data.
NF	active \r	Controls the Noise Filter setting. It accepts a Boolean value 1 (default) or 0. A value of 1 engages the mode while a value of 0 deactivates it.
PM	mode \r	Puts the board into Poll Mode. Setting the mode parameter to 1 engages poll mode while 0 (default) turns it off.
RS	none (\r)	Resets the vision board. Note: on reset the first character is a /r.
SW	[x y x_2 y_2] \r	Sets the Window size of the camera. It accepts the x and y Cartesian coordinates of the upper left corner followed by the lower right of the window you wish to set.
TC	[R_{min} R_{max} G_{min} G_{max} B_{min} B_{max}]\r	Track a Colour. Accepts the minimum and maximum RGB (CrYCb) values ans outputs a type M or C data packet (set by the MM command).
TW	none (\r)	Track the colour found in the central region of the current Window.

1 Complete descriptions may be found in the user manual.

Table 2: Advanced commands		
Command	**Parameter(s)**	**Description**[1]
CR	[reg1 value1 [reg2 value2 ... reg16 value16]]\r	Sets the Camera's internal Register values directly. The register locations and possible settings can be found in the Omnivision documentation.
DF	none (\r)	Dump a Frame out the serial port to a computer.
DM	value \r	Sets the Delay before packets that are transmitted over the serial port.
GV	none (\r)	gets the current Version of the firmware from the camera.
HM	active \r	Puts the camera into Half-horizontal resolution Mode for the DF-command and the LM command when dumping a bitmap image.
I1	none (\r)	Uses the servo port as a digital input.
LM	active \r	Turns on the Line Mode which uses the tme between each frame to transmit more detailed data about the image.
RM	bit_flags \r	Engage the Raw serial transfer Mode. It reads the bit values of the first 3 (lsb) bits to configure settings.
S1	position \r	Lets you set the position of servo 1. 0 turns the servo off and holds the line low. 1–127 will set the servo to that position while it is tracking or getting mean data.
SM	value \r	Used to enable the Switching Mode of colour tracking.
1 Complete descriptions may be found in the user manual.		

About the CMUCam and the module

The CMUcam1 is an SX28 microcontroller [6] interfaced with an OV6620 Omnivision CMOS camera [7] on a chip that allows simple high level data to be extracted from the camera's streaming video. The board communicates using a TTL level serial port and has the following functionality:

- Track user defined colour blobs at 17 frames/s
- Find the centroid of the blob
- Gather mean colour and variance data.
- Arbitrary image windowing
- 80×143 resolution
- 9600 baud serial communication
- Automatically detect a colour and drive a servo to track an object
- Slave parallel image processing mode off a single camera bus (advanced function)
- Ability to control one servo or have one digital I/O pin (advanced function)
- Adjust the camera's image properties (advanced function)

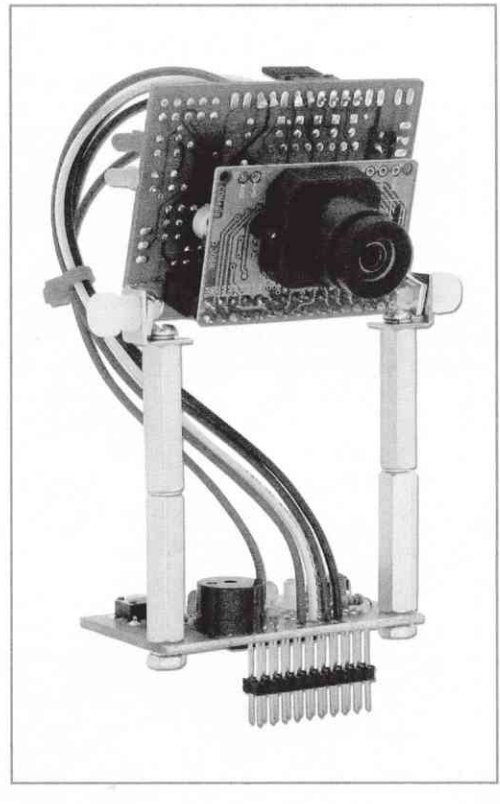

When using the camera outside, due to the sun's powerful IR (infrared) emissions, even on relatively cloudy days, it will probably be necessary to use either an IR cutoff filter or a neutral density-3 camera filter to decrease the ambient light level. A lens taken from a cheap drugstore pair of sunglasses when placed over the camera lens will allow the CMUcam1 to work in sun lit conditions.

Serial comms and command sets

The serial communication parameters are as follows: 9600 baud, 8 data bits, 1 stop bit; no parity, no flow control (no Xon/Xoff or hardware).

All commands are sent using visible ASCII characters, i.e., 123 is three bytes '123'). Upon a successful transmission of a command, the ACK string should be returned.

If there was a problem in the syntax of the transmission, or if a detectable transfer error occurred, an NCK string is returned.

After either an ACK or an NCK, an \r is returned. When a prompt ('\r' followed by a ':') is returned, it means that the camera is waiting for another command in the idle state. White spaces do matter and are used to separate argument parameters. The \r (ASCII 13, carriage return) is used to end each line and activate each command. If visible character transmission exerts too much overhead, it is possible to use varying degrees of raw data transfer ('Raw mode').

The system supports two command sets – basic (**Table 1**) and advanced (**Table 2**).

Utility programs

Also included on the Seattle Robotics CDROM are the following utility programs.

- *Test CMUcam1 to BoeBot communication*. This program sets up a 9600-baud serial connection between the Stamp and the CMUcam1. It then tells the CMUcam1 to blink its green LED.
- *Display CMUcam1 tracking data on debug screen*. The first data packet displayed by the Debug screen is the 'S' (Statistics) packet which tells you the colour of the object it is tracking. This will let you evaluate the ability of your camera to track an object. Try different colour objects and different sizes to see the effects on the tracking data. This is an important program that you will re-use many times as you as you find more and more interesting things to do with your CMUcam1 and BoeBot. This program allows you to see and understand exactly what your BoeBot can see with its CMUcam1 vision system.

A short video showing a CMUcamequipped BoeBot locating a red object may be found at [8].

(070132-I)

Weblinks

[1] *www.parallax.com*

[2] *www.stampsinclass.com*

[3] *www.seattlerobotics.com*

[4] *www.cs.cmu.edu/~cmucam*

[5] *www.milinst.com*

[6] *www.ubicom.com/processors/sx/sx_family.html*

[7] *www.ovt.com*

[8] *www.seattlerobotics.com/video.htm*

272 A/D Converter for Robots

SENSORS

Tilo Gockel

The TLC549CP analogue to digital converter (A/D) from Texas Instruments is a good choice for applications in the field of robotics (especially those using 8051-compatible microcontrollers). These particular converters are readily available, low-cost and easy to use.

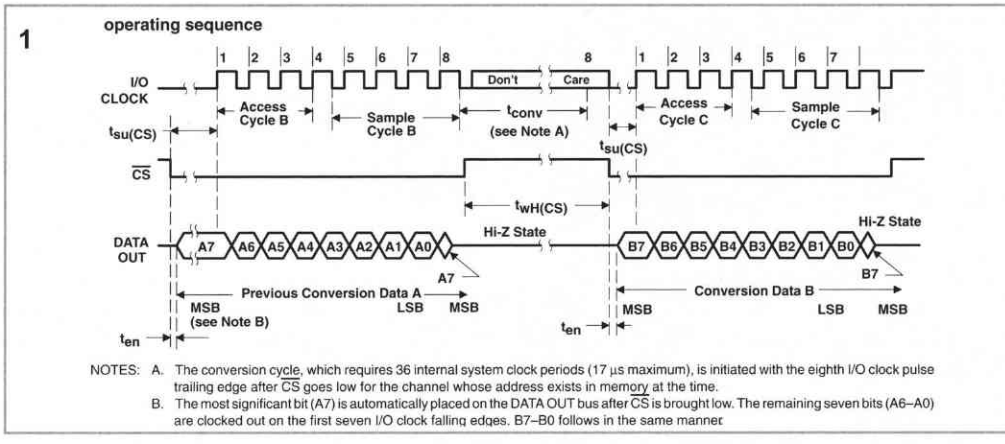

A quick look at the TLC549data sheet indicates the timing waveforms for the I/ O Clock, DATA OUT and CS signals (**Figure 1**). A circuit to test the converter was quickly constructed using a variable resistor as a potential divider. **Figure 2** shows the simple interface between a TLC549CP and a 8051-compatible microcontroller.

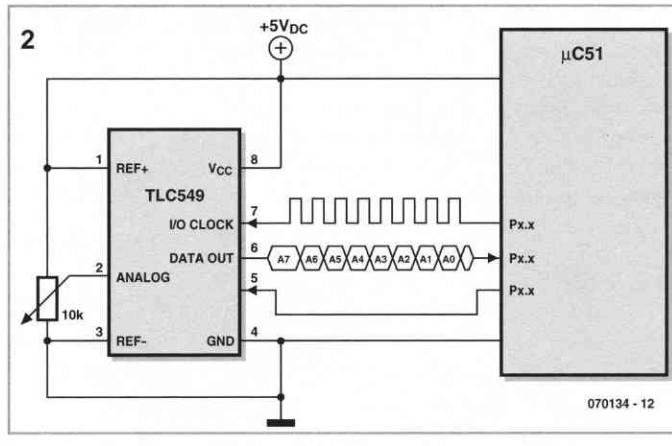

A short function which reads the serial data from the TLC549 and returns the value addat is given below. Tests with an AT89S8252 Controller-Board (the *Elektor Electronics* December 2005 Flash Micro Board) indicated that the `_wait()` can be omitted because the controller runs slowly enough not to need it (faster processors may require it but it has been 'commented out' in this listing).
The actual function written in C is:

```
unsigned char ReadADC1() {
unsigned char count;
unsigned char addat = 0;
P1_B2 = 0; // clk
P3_B0 = 0; // Chip Select
P3_B0 = 1; //
//_wait(); // > 20 usek (50kHz)
P3_B0 = 0;
for(count = 0; count < 8;
  count++){
addat = addat < 1;
if (P1_B3 == 1) ++addat;
P1_B2 = 1;
//_wait();
P1_B2 = 0;
}
return addat;
}
```

As an example two TLC549 A/D converters can be wired to a microcontroller to measure the amount of light falling onto two Light Dependant Resistors (LDR). This application will require two of the interface connections shown in Figure 2. Connect the LDR either in place of the variable resistor or in parallel to it.

(070134-I)

273 Robot Footballer

ACTUATORS

Julian Straub

You will do doubt have seen pictures from 'RoboCup' showing robots booting footballs from one end of the pitch to the other. Building an electromechanical robot like this is entirely within the capability of the hobbyist with the help of a few cheap everyday items.

In order to give the ball a good kick the robot's feet are powered by linear solenoids. Acceleration is more imp o r t ant t han force, however, and so we eschew readily-available solenoids which generally operate on 12 V or 24 V and which, although powerful, are much too slow for our purposes.

The integral of force over time (or impulse) produced by a coil with an iron armature depends, disregarding constant factors such as turns count, coil geometry and permeability, on the change in the coil current. The faster we wish to change the current, the higher the voltage we will have to use. And so we need a high voltage supply.

We can generate a high voltage using the flash from a disposable camera of the sort that can sometimes be had for free from photography shops. The camera electronics includes a high-voltage cascade circuit with a storage capacitor for the flash. These components are ideal for pressing into service as part of a robotic footballer.

Open the camera carefully. First remove the battery making sure not to burn your finger by touching the capacitor contacts. For safety's sake discharge the capacitor using a resistor of a few kilo-ohms before removing the printed circuit board. Because we will later want the capacitor to be charged continuously, bridge the power supply switch connections. The circuit in the camera tested by the author (made by Kodak) charges a 120 μF

1

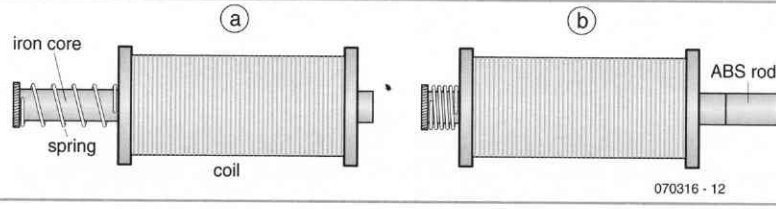

2

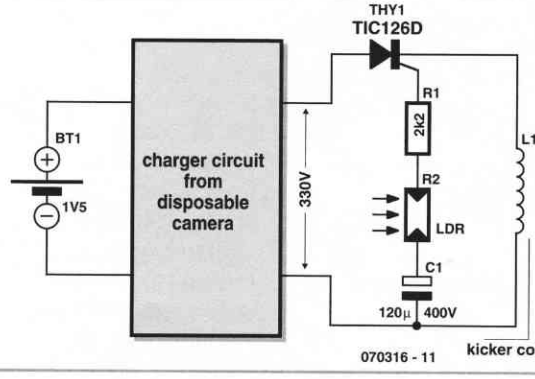

high voltage capacitor to 330 V in 16 s from a 1.5 V battery.

Next we turn to the sewing box for inspiration. We need two cotton reels from which we will fashion inductors using enamelled copper wire. On the one hand it is advantageous to use wire that is very thin so that we can have as many turns as possible and hence a high inductance, while on the other hand the high ohmic resistance of this arrangement limits the maximum current that can be achieved; we need to find a good compromise. To simplify making the windings with very fine wire, first wrap the coil former with a layer of thin double-sided adhesive tape. This will hold the wire in place as you wind the first layer. Use adhesive tape again after each successive layer of wire. Finally, wrap the finished coil in insulating tape so that just the two connection wires (with extra insulation) protrude.

The two iron cores can with a little luck be found in the clearance bin at an electronics shop. If not, you can resort to do-it-yourself: the cores can be ordered from any metal warehouse that can supply steel rounds. Ensure that you do not buy vanadium steel or a non-ferrous metal. The size should be chosen so that the lengths of metal pass through the cotton reels without too much play. In each drill a hole in one end and fit a small washer to prevent the light compression spring from sliding down. The spring ensures that after each kick (**Figure 1a**) the foot will return smartly to its initial position (**Figure 1b**). The cores are fitted into the coils and a plastic cylinder, which will be the part that actually makes contact with the ball, is attached to the free ends.

Figure 2 shows how simple the drive circuit can be. A type TIC126D thyristor wired between the high-voltage generator and the coil triggers the kick. The thyristor is in turn triggered optically via an LDR, which ensures isolation between the high voltage electronics and the control circuit.

(070316-I)

274 Lithium Charger

POWER SUPPLIES, BATTERIES AND CHARGERS

Paul Goossens

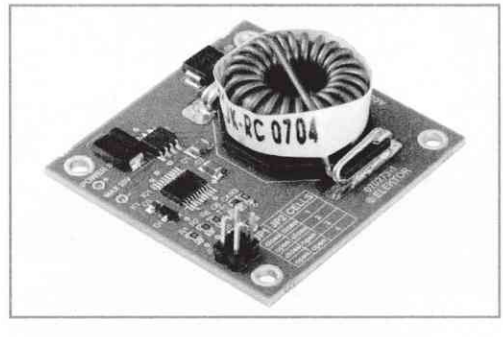

Batteries based on Lithium, such as LiPo (Lithium-polymer) and Lithium-Ion ones are ideal candidates to supply a robot with power. Compared to other types of battery they are lighter, which results in a lower mechanical strain on the chassis. The availability is good as well, and they are manufactured in many shapes and sizes.

Charging

The charging of Lithium batteries is a very exact science. If the wrong method is used there is a real chance that they'll burst into flames.

For this reason it is only sensible that you always use a proper charger. With the use of a MAX745 such a charger can easily be constructed at home.

During the charging process the charge current should not rise above 1C. This means that for a 1200 mAh battery it may not be charged with a current of more than 1.2 A!

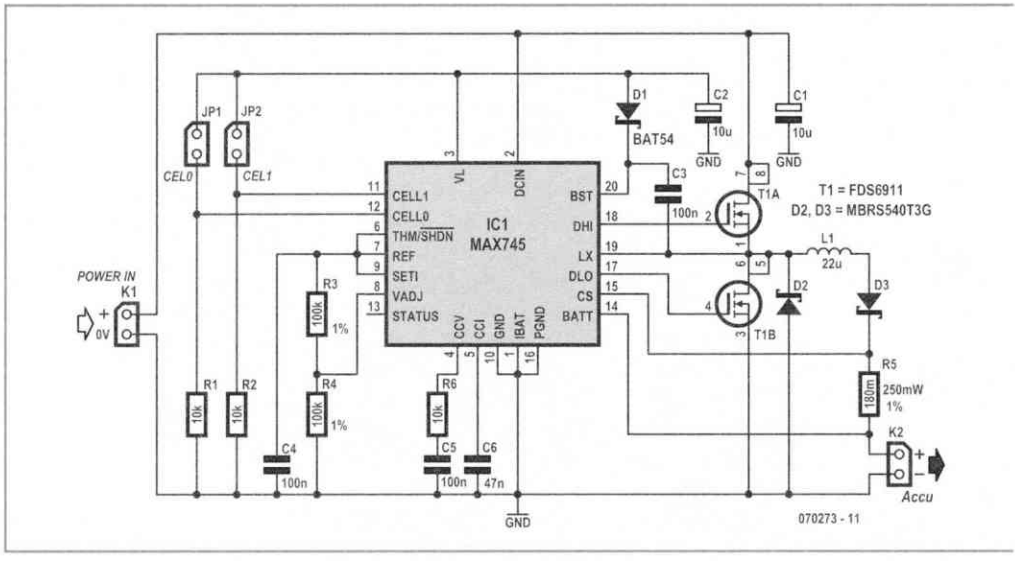

Furthermore, the terminal voltage for this type of battery may never rise above 4.25 V per cell. In principle a lithium charger is nothing more than a current source with a (precision!) maximum output voltage.

Charge controller

In our case the charger uses a step-down converter. In this way very little power is wasted in the charger and it can operate without the use of a heatsink. The complete charge controller is inside IC1. A few external components are required for the step-down converter. These are FET T1 and its surrounding components.

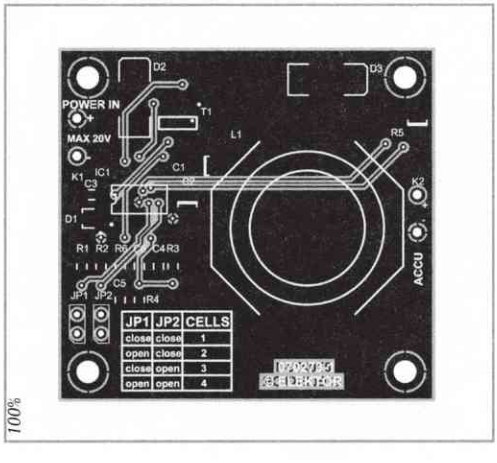

The battery voltage is measured via pin 14 (BATT). The voltage difference between BATT and CS is measured by the IC to control the charging current. The IC tries to keep this potential difference to 185 mV.

In our example we've used a resistor of 180 mΩ. The charging current is therefore: 185 mV/180 mΩ = 1.02 A.
If you want to use a different charging current you can calculate the value for R5 using the formula:

$$R5 = \frac{185\,\text{mV}}{I_{\text{CHARGE}}}$$

A pair of jumpers is used to select the number of cells in the battery. The four possible settings are shown in **Table 1**.

These jumpers tell the circuit how many cells are connected in series inside the battery. This is very important, since it determines what the maximum voltage may be across the battery.

Table 1		
JP1	**JP2**	**Number of cells**
Closed	Closed	1
Open	Closed	2
Closed	Open	3
Open	Open	4

The maximum voltage per cell is adjusted via V_{adj} and can be set between 3.95 V and 4.45 V. Resistors R3 and R4 set the terminal voltage to 4.25 V in this case. Because Vadj has a narrow operating range we have to use 1% (close tolerance) resistors to set the voltage very accurately!

COMPONENTS LIST

Resistors
R1, R2, R6 = 10 kΩ (SMD 0805)
R3, R4 = 100 kΩ 1% (SMD 0805)
R5 = 0.18 Ω 0.25W (SMD 1210), e.g. Digikey P.18SCT-ND

Capacitors
C1, C2 = 10 µF 25V (SMD 12010)
C3, C4, C5 = 100 nF (SMD 0805)
C6 = 47 nF (SMD 0805)

Semiconductors
D1 = BAT54 (SOT-23)
D2, D3 = MBRS540T3G (SMC), e.g. Digikey MBRS540T3GOSCT-ND
IC1 = MAX745
T1 = FDS6911 (SOIC12), e.g. Digikey FDS6911CT-ND

Miscellaneous
L1 = 22 µH (JW-MILLER PM2110-220K-RC), e.g. Digikey M8760-ND
JP1, JP2 = jumper with 2-way SIL pinheader
PCB, order code 070273-1 from Elektor Shop

Construction

Thanks to the use of a double-sided PCB the construction of this circuit is very simple. All components are mounted on the top side of the board. When soldering the coil it may be necessary to let the soldering iron heat up a bit more first. The connecting leads are quite chunky and they require a fair amount of heat to raise them to the correct temperature.

When all parts have been soldered and the circuit has been checked you can power the circuit via K1 with a DC voltage of no more than 24 V. You should always double-check that you have set the jumpers for the correct number of cells before connecting the LiPo or Li-Ion battery! With a charging current of 1 C an empty cell should be fully charged in about an hour and a quarter.

(070273-I)

275 Torque is Cheap

MECHANICS

Bernhard Spitzer

While on the lookout for low-cost drive solutions the author's eye fell upon a cheap battery-operated cordless screwdriver in an electronics shop (**Figure 1**).

These are available for just a few pounds (for example, Conrad order code 481576) and include a powerful '380' motor and a multiple-stage planetary drive. The classification of motors as '380', '540' and so on follows the part numbers in the range produced by Mabuchi



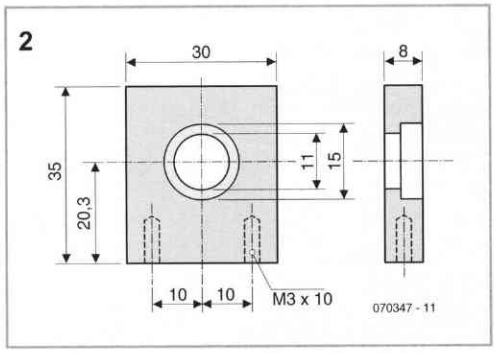

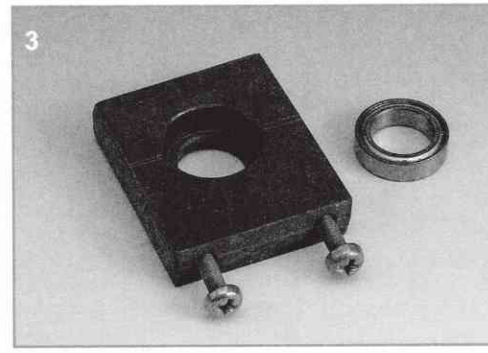

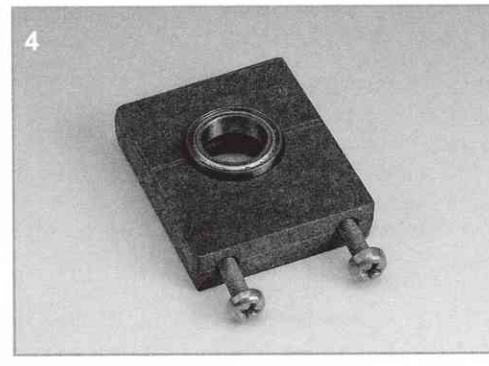

Motors. A '380' motor corresponds to the Mabuchi RS380 and has a diameter of 29 mm and a length of approximately 40 mm. The nominal voltage is 6 V with a maximum current of approximately 4 A, with a power of between 10 W and 15 W depending on the model: see, for example, Conrad Electronics order code 244511.

To drive a wheel on a robot model we require a bearing on the drive axle. We must also dispense with all the unnecessary parts that come with the motor: first remove the battery case and then the gearbox, by pushing out the two pins (seen in **Figure 1** and **Figure 5** near to where the black and orange parts of the case meet) using a 2 mm pin.

With the gearbox removed the two black halves of the case can easily be separated. Now the motor connections must be straightened out in order to remove the reversing switch.

The two halves of the case should now be cut away in such a way that the motor mounting remains intact. Drill a hole at the lowest point of the lower half for a fixing screw.

Finally we need a bearing mount to support the wheel, for which we use a small piece of plastic (see the drawing in **Figure 2** for dimensions).

For smooth running we use a 15 mm × 10 mm × 4 mm ball bearing designed for use in model cars (for example made by Tamiya). The 15 mm diameter recess (**Figure 3**) can be made using a Forstner bit. The hole in the mounting block should be made at half the motor enclosure diameter from the edge (here 20.3 mm) so

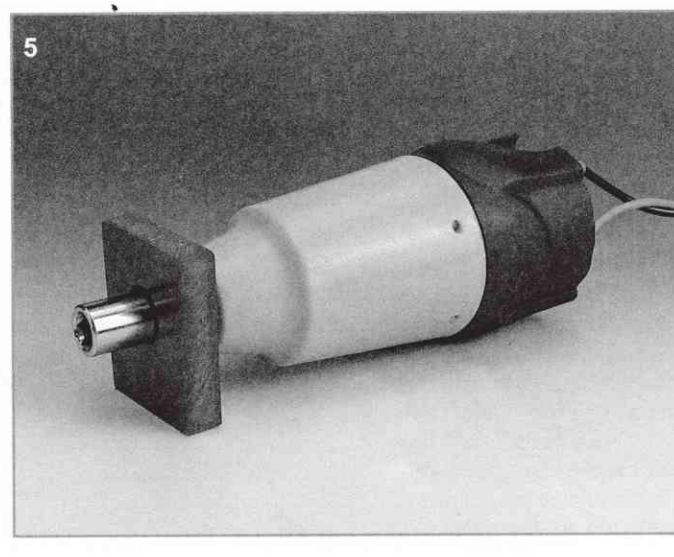

that the shaft will later be able to pass exactly through it. The finished bearing mount with bearing fitted is shown in **Figure 4**. The two M3×16 screws are used to fix the mount to the baseplate of the vehicle. **Figure 5** shows the motor and gear box ready for installation, with bearing mount fitted. Either wheels with a 10 mm axle hole can be used, glued directly to the shaft, or the wheel can be glued to a screwdriver bit which is then fitted to the motor.

(070347-I)

276 Philips ME Construction Kits

MISCELLANEOUS ELECTRONICS AND DESIGN IDEAS

Luc Lemmens

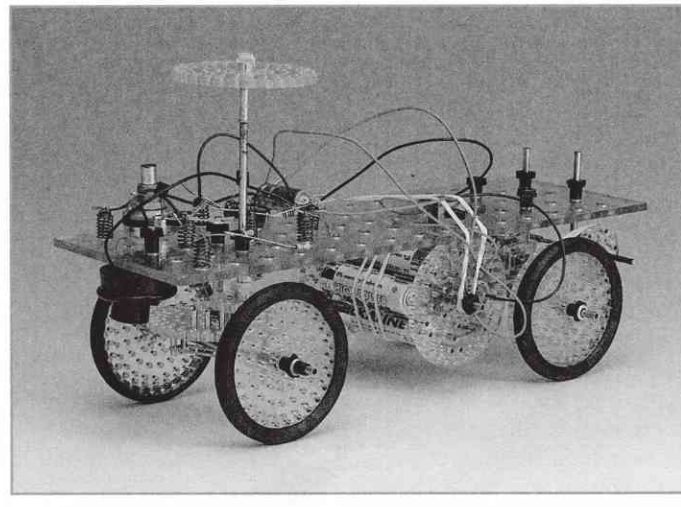

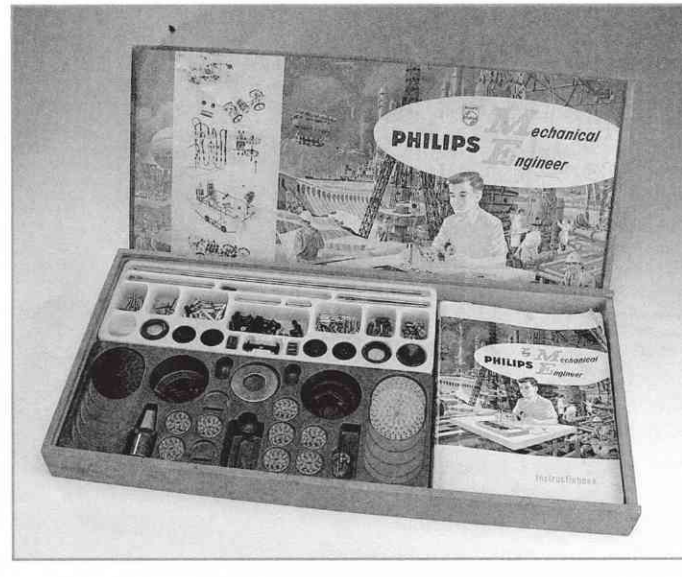

Many of our readers – especially the older generation – will remember the legendary EE (Electronic Engineering) experimenter kits. They were part of the Philips (not 'Phillips') product line for many years, from 1963 until well into the 1980s. Many electronics professionals owe their interest in the field to these kits. The first kits were primarily intended to promote Philips electronic components among hobbyists, but in the later years, the complexity of the designs increased and the range of kits was oriented more towards educational use.

In the late 1980s, Philips sold the electronic experimenting kits business to the German firm Schuco. It continued to sell them until the mid-1990s.

The ME (mechanical engineering) experimenter kits from Philips are much less well known, but they were only available for around five years in the 1960s. It

would appear that the ME series was much less successful than the EE series, which is why they were only available for a relatively short time. Anyone who ever tried to work with them – such as the author – will certainly know why they weren't a resounding success like the EE boxes.

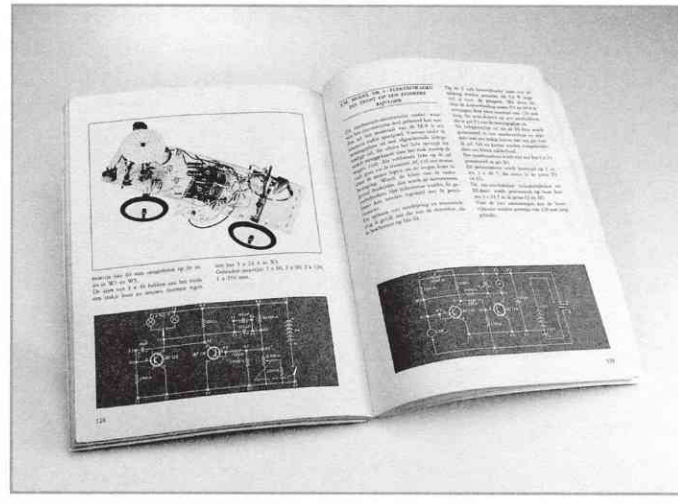

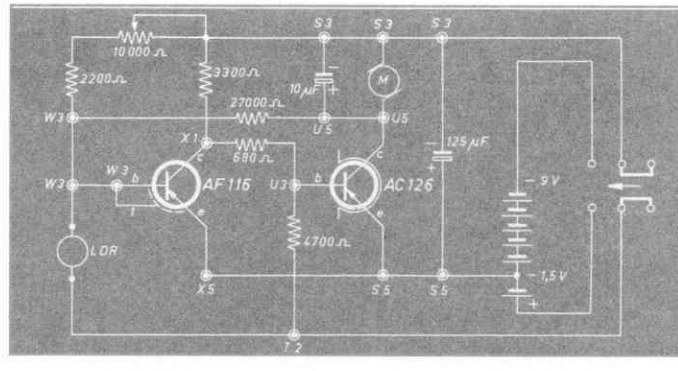

The ME kits couldn't compete with other mechanical construction systems that were very popular at the time, such as Meccano and Fisher. Many of the parts were much too fragile for clumsy children's hands, and in some cases the proposed structures did serious damage to the components. In particular, the pins that were used for gearwheels and all sorts of connections between axles were subjected to heavy loads in these designs, and they could head straight for the rubbish bin after the project. Fortunately, these pins and other parts could be obtained as spare parts at that time.

No matter how nice some of the projects looked on paper, they were often not especially solid or robust. As a result, many hours of painstaking assembly work were often rewarded with a mechanical construction that was quite capable of self-demolition. The ME kits used only clamped connections, and in many cases they were not good enough to accommodate all the mechanical forces.

But the nice thing about the ME system was the enormous variety of structures you could make with them – from mechanical clocks to real water pumping installations. There were also construction projects that used parts from the EE series in a combination of mechanical and electronic engineering. An example is the car in the photo. It stops automatically when it drives on top of a dark surface. Nowadays this is a very simple application with quite simple technology, but it had a certain magic for a small boy!

Philips also tried to get even younger children interested in mechanical engineering and thus create a pool of new customers for the ME kits. Philoform, a construction system that strongly resembled Lego Technic and

Web Links
http://ee.old.no/mechanics
http://sharon.esrac.ele.tue.nl/~pa0ib/bouwdozn/index.html
www.hansotten.com/philipsme1200.html
www.girdersandgears.com/norelco.html

could be used together with ME, was introduced in 1968. However, the end of the line for these mechanical construction materials from Eindhoven came in 1970.

Incidentally, the first ME kit, the ME1200, had a very strong feature with regard to mechanical engineering. The mechanical parts were housed in a wooden box with a sliding lid. Probably for this reason, they have survived the years relatively intact, and you can regularly find complete or practically complete kits offered on Ebay and similar auction sites. They usually change hands for around twenty to thirty pounds, naturally depending on their general condition. Just as with all old things, there are collectors who are interested in them, and there are various websites where you can find more information.

(070277-1)

277 Stereo Robot Ears

SENSORS

Get your robot to home-in on a sound source

Claude Baumann & Laurent Kneip

Service robots of the future will most likely need to act on spoken commands and be able to recognise voices. This article takes a look at one aspect of this behaviour namely locating the position of a sound source using the crosscorrelation function. A technique is developed which drastically cuts down on the number crunching so that even a basic microcontroller fitted with binaural sensors can pinpoint a continuous audio signal with an accuracy of just 10 degrees.

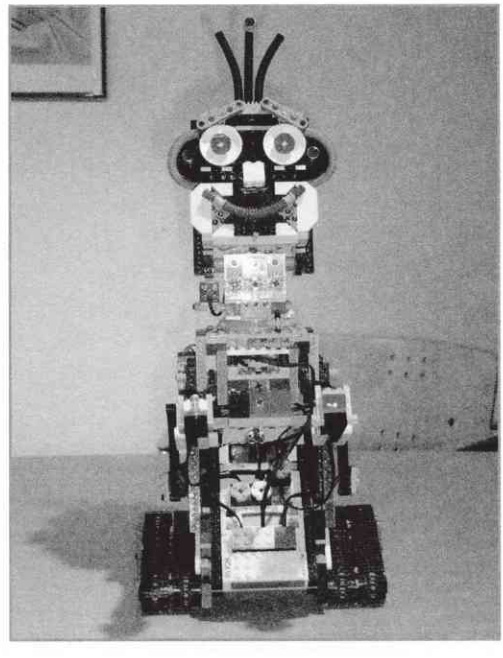

The GASTON Lego robot built in 2003 by the students at a school in Luxembourg [1] (see picture) has a number of interesting features the most obvious of which is its rudimentary 'face' which is used to express a limited range of emotions. In addition it is able to detect sounds and turn its head in the direction of the sound source. It uses an array of three microphones together with a microcontroller to make a simple 'precedence sensor' which measures the time difference produced when a sound pressure wave-front (made by a clap or finger click) strikes the microphones.

Despite its impressive functionality, GASTON cannot work with a continuous audio signal let alone follow a moving sound source. This ability requires a more complex approach which we will go on to investigate here.

How we track down sounds

The human ear is an amazingly complex and sensitive organ. Together with dedicated regions of the brain it enables us to extract meaningful information from the general cacophony which is continually assailing our ears. Amongst other things it has been de-

monstrated that we are able to identify the bearing (azimuth) of a sound source with an accuracy of just 3°.

Applying a crude analogy from engineering systems we could say that the process of hearing uses a number of subsystems. Most obviously we, along with all other creatures (excluding mantids apparently) are equipped with two ears hence 'binaural' which in conjunction with dedicated regions of the brain we use to identify the direction of a sound source using several different methods:

a Interaural Level Difference – ILD

Low frequencies have wavelengths which are greater than the diameter of the head; they extend around to the far ear with very little loss of amplitude.

At frequencies above 1 kHz however the head acts as a low-pass filter providing up to 20 dB attenuation to the signal so there is a significant reduction in the sound level reaching the far ear (**Figure 1**) which enables the brain to estimate the position of the sound source.

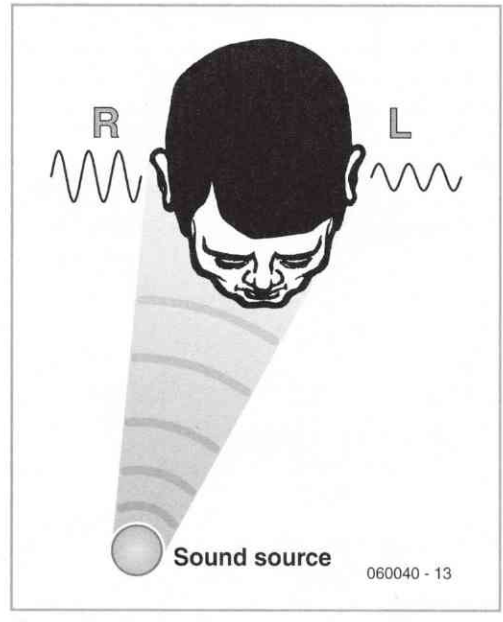

Figure 1 *The head acts as a low-pass filter attenuating frequencies above 1 kHz. The ear nearest the sound source will hear the sound louder than the far ear.*

b Interaural Time Difference – ITD

With a sound originating from one side the pressure waves arrive at the ears with a slight time difference. The brain interprets the two signals, applying a type of neural cross-correlation function. The phase shift between the two signals gives the angle of the sound source (the azimuth α).

It can be seen from **Figure 2** that sound emanating from any of the points $M(u,v)$ lying on the hyperbola given by the equations

$$\frac{u^2}{a^2} - \frac{v^2}{b^2} = 1$$

$$a = \frac{\Delta x}{2}$$

$$b = k^2 - a^2$$

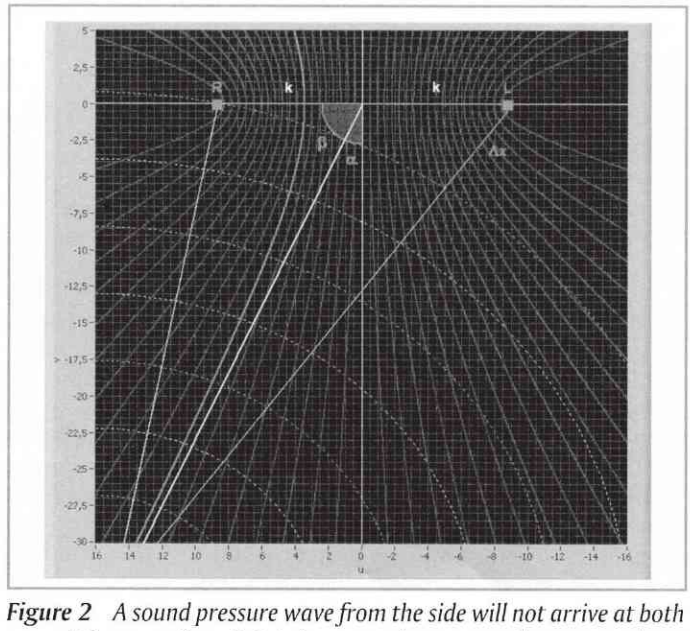

Figure 2 *A sound pressure wave from the side will not arrive at both ears at the same time. Points in space where a sound source produces identical delays at the ears are on a hyperbola (red) approaching the asymptote (white). The brain cannot identify the position but only approximate the direction of a sound source anywhere along this line.*

where k is the half distance between the ears. These points produce exactly the same time difference at the ears. The term Δx is the distance the sound travels in the time Δt, with $\Delta x = c \times \Delta t$.
The speed of sound c equals 343 m/s at 25 °C.

The hyperbola approaches the asymptote given by:

$$v = \frac{b}{a} \times u$$

where $\tan(\beta) = b/a$.

$$\beta = \arctan\left(\sqrt{\frac{4k^2}{c^2} \cdot \frac{1}{\Delta t^2} - 1}\right)$$

For R (right ear): $\alpha = 90° - \beta$; for L (left ear) the corresponding $\alpha = -(90° - \beta)$.

The ear must also be able to determine if the sound emanates from in front of or behind the ear and also either from above or below. The points in three-dimensional space where a sound source will produce identical time differences in the left and right ear actually form the surface of a hyperboloid.

It is thought that the brain can resolve these spatial ambiguities by detecting subtle changes in the signal spectrum caused by the outer ear shape, absorption/scattering by the torso and head, localising by turning of the head and possibly also by detecting Doppler effects.

Whatever processes the brain uses to resolve the left-right direction problem it is interesting to plug some values into the formula for a sound source positioned in front and to the right of the head. At a bearing $\alpha = 20°$ and assuming an ear separation of 17.5 cm, a time difference of 175 μs will be apparent at the ears. At an azimuth of just 3° the time difference will only be 27 μs. It is difficult to imagine how the brain (with a neuron switching time in the millisecond range) can resolve such short time differences and gives us some insight into the complex processes it is capable of.

The limits of ITD for localising a continuous tone are clear; a sound wave will take around 500 μs to travel the distance between the ears which equates to a half cycle or a 180° phase shift between the two signals. At frequencies of 1 kHz and above it is no longer clear if the signal in one ear leads or lags the other ear.

c The Precedence effect

Strong reflections and standing waves produce localised highs and lows in sound pressure when a continuous tone is reproduced in an acoustically reflective enclosed space, making it almost impossible to pin-point the sound source.

When the sound source is discontinuous however it has been shown that the brain is able to identify the source, using a modified ITD measurement it gives precedence to the arrival of the first sound pressure wave at the ears and appears to open a 'neural time window' of around 1 ms for this purpose, ignoring any subsequent echoes. The phase difference of the two signals gives the azimuth bearing of the sound source.

The LEGO robot GASTON uses this technique but it is not of much use for continuous sounds.

Cross-Correlation

When there are two identical signals shifted in time, it is common practice to apply the cross-correlation operation to them. Together with Fourier analysis these two operations form the backbone of techniques used in digital signal processing.

The digital cross-correlation is derived from two continuous waveforms as follows: The value at $\Delta t = 0$ is found by sampling the waveforms at intervals t, multiplying the samples from the two waveforms together and then summing them and normalising the result.
The cross-correlation at another position, say $\Delta t = 1\,\mu$s is then performed in the same way except this time the second signal is shifted in respect to the first by 1 μs. The maximum

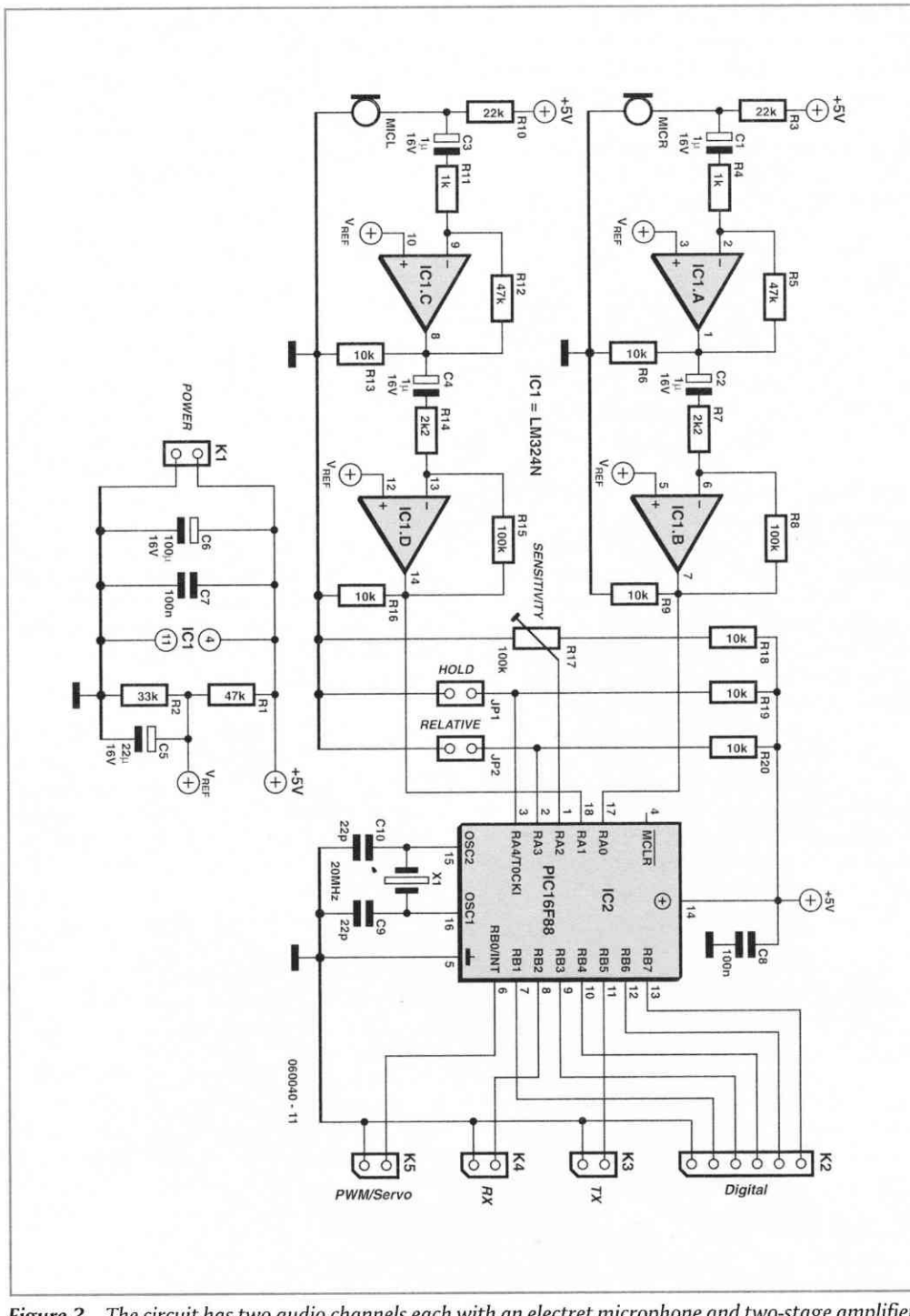

Figure 3 *The circuit has two audio channels each with an electret microphone and two-stage amplifier. The two amplifier outputs are connected to the two A/D converter inputs on the microcontroller.*

sampling rate is chosen to ensure that the processor can perform the necessary calculations along with any other work it needs to do within the sampling time constraints.

It can be determined by the resultant cross-correlation whether the two signals are 'correlated' for example if the first signal is not in phase with the second signal but otherwise very similar the cross-correlation function will show a marked peak corresponding to the phase shift between the two signals.

Cross-correlation calculations involve many multiplications and additions; it is hardly surprising that in the DSP world it has a reputation for being particularly processor hungry.

Reducing computer loading

In order to perform cross-correlation with a general purpose microcontroller it is necessary to find ways of reducing the number of computations that the processor is required to make. For this application it is valid to limit the number of phase shifted operations taking into account the distance between the two microphones.

It can be shown also that maximising the product sum (cross-correlation function) is equivalent to minimising another function which is much simpler to calculate. For each phase shift the sum of the differences of both values (squared) can be transformed so that cross-correlation function $\gamma(\tau)$ in the equation

$$\begin{aligned} f(\tau) &= \sum\left[x(t)-y(t+\tau)\right]^2 \\ &= \sum\left[x^2(t)+y^2(t+\tau)-2x(t)y(t+\tau)\right] \\ &= \sum x^2(t)+\sum y^2(t+\tau)-2\sum x(t)y(t+\tau) \\ &= c_1-2\sum x(t)y(t+\tau) \\ &= c_1-2\cdot N\cdot\gamma(\tau) \end{aligned}$$

with $\gamma(\tau) = (2N)^{-1}[c_1 - f(\tau)]$

The value of c_1 is constant for every phase shift while the square of the values are added in each case irrespective of which phase position it is. (N is the constant geometric mean of all the signal values produced by normalising $\gamma(\tau)$).

It is evident that when the cross-correlation value is at maximum it corresponds to a minimum of the deviation sum of f. The following expression is therefore valid for our application and makes fewer demands on precious processor resources.

$$g(\tau) = \sum\left|x(t)-y(t+\tau)\right|$$

This expression is a close approximation to cross-correlation. The two measured samples are subtracted (ignore the sign) to give the absolute difference. Summing them produces

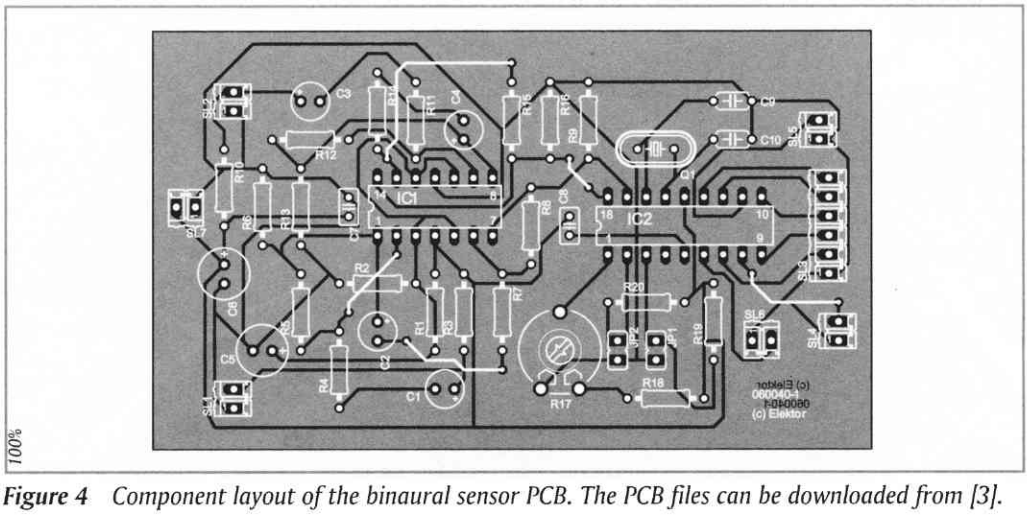

Figure 4 *Component layout of the binaural sensor PCB. The PCB files can be downloaded from [3].*

a non-normalised value which is at a minimum when the waves are correlated. The technique requires far fewer calculations than the classic crosscorrelation method and is at least 20 times faster.

Construction of the binaural sensors

The circuit in (**Figure 3**) could hardly be simpler. It consists of two audio channels each with own electret microphone and two-stage audio amplifier. Each audio signal is then fed to two pins of a microcontroller which have been configured as A/D converter inputs. A preset pot, R17, allows sensitivity adjustment.

Bearing data is output every tenth of a second using several different interfaces, which gives the sensor the flexibility to be used in many different types of robot. The 8-bit bearing information is sent from TX serially using a UART (2400 1 N 8), it is also output as a 5-bit parallel digital value.

A servo output (PWM/Servo) provides a signal with a width from 1 to 2 ms at a 50 Hz repetition rate suitable for driving a standard modelling servo.

Jumper 1 (Hold) is provided for test purposes, it introduces a two seconds pause between readings during which time the last valid output is maintained. Jumper 2 (Relative) defines how the output behaves when the received sounds are too quiet to make a measurement; with it fitted the output returns to the middle position (azimuth $\alpha = 0$), with it removed the output retains its last valid position. This gives the system a degree of flexibility, for example if the microphones are mounted on a robot which can turn and move toward the sound it is better to fit the jumper otherwise the robot continues to turn when no sound is detected. When the microphones are fixed and the output is used to pan a webcam say, it is better to remove the jumper otherwise the camera continually pans back to the centre position when no sound is detected.

The RX input can be used later for microcontroller firmware updates. A 100-kΩ pulldown resistor is used to avoid a floating input.

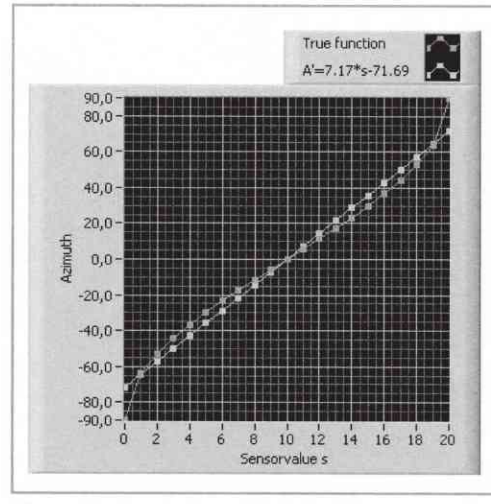

Figure 5 Resolution of the sound source bearing is a function of its azimuth. The average value is approximately 9°.

COMPONENTS LIST

Resistors
R1, R5, R12 = 47 kΩ
R2 = 33 kΩ
R3, R10 = 22 kΩ
R4, R11 = 1 kΩ
R6, R9, R13, R16,R18, R19, R20 = 10 kΩ
R7, R14 = 2kΩ2
R8, R15 = 100 kΩ
R17 = 100 kΩ preset
Rx = 100 kΩ

Capacitors
C1, C2, C3, C4 = 1 μF 16 V
C5 = 22 μF 16 V
C6 = 100 μF 16 V
C7, C8 = 100 nF
C9, C10 = 22 pF

Semiconductors
IC1 = LM324
IC2 = PIC16F88, programmed, order code 060040-41 from Elektor Shop

Miscellaneous
Q1 = 20 MHz quartz crystal
DIL14 socket
DIL18 socket
SL1, SL2, (SL4), SL5, SL6, SL7 = 2-way SIL pinheader (SL4 bridged with a 100k resistor, see text)
SL3 = 6-way SIL pinheader
JP1, JP2 = jumper
MicR, MicL = CZ034 electret microphone insert
PCB, ref. 060040-1, free artwork download from Elektor website

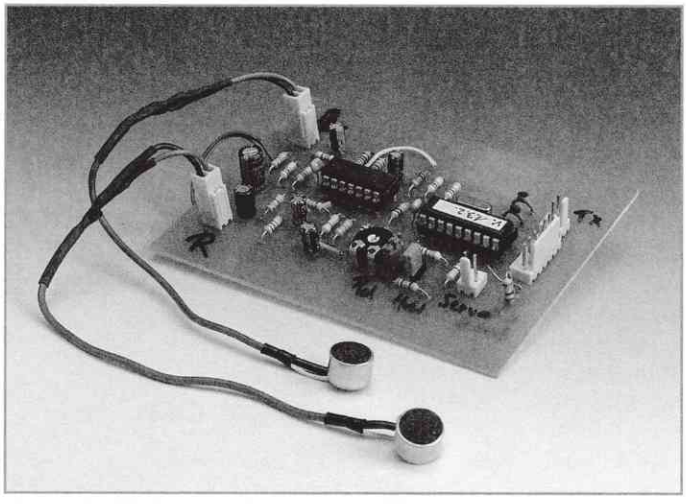

Figure 6 *The binaural sensor prototype.*

architecture is organised so that data from the two channels can be stored in two 96-byte banks (banks 2 and 3) as quickly as possible by switching a single bit and using indirect addressing.
The PIC16F88 contains a 10-bit A/D converter but for this application the two least significant bits are ignored so that we use an 8-bit value. The sampling rate is 20 kHz. The values are smoothed by an FIR-filter.
Any erroneous values detected by the program are over-written with the previous correct value.

Timing and resolution

For this application we will consider the frequency range from 200 to 1000 Hz that the processor calculates the ITDs (signal delays) it requires a sufficiently high sampling rate which could only be achieved by careful optimising of the program code. The PIC16F88 At a frequency of 1 kHz a 180° phase shift is measured after 0.5 ms i.e. the time taken for ten samples.
The smallest detectable time difference corresponds to a minimum distance of:

$$d_{\min} = 50\ [\mu s] \cdot 343\ [m/s] = 1.7\ cm$$

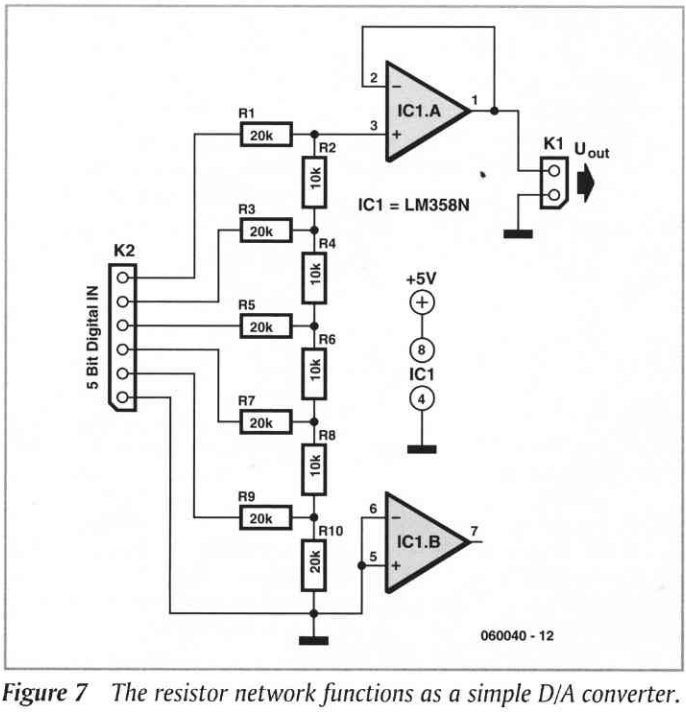

Figure 7 *The resistor network functions as a simple D/A converter.*

This gives the optimum spacing between the microphones (2k) of:

$$2k = 10\ [\text{Samples}] \times d_{\min} = 17\ cm$$

When the sound source is at the extreme right or left of the field (azimuth = ±90°), a time difference of ±10 samples will be measured. A minimum of 20 calculations are made for the correlation calculation.

When the microphones are mounted on either side of a (solid) head this has the effect of increasing the microphone spacing, the pressure wave from one side needs to travel around the curve of the head before

Sensor output values:			
Sound direction	**(s+2) 8-bit-Integer (TX)**	**PWM/Servo**	**(s+6) 5-bit-Integer (Digital)**
Extreme right	22	2 ms	26
Central	12	1,5 ms	16
Extreme left	2	1 ms	6

it reaches the second microphone. Assuming a sphere with microphones mounted along an axis, the arc length is $r \times \pi$, where r is the radius of the head and should be chosen so that the arc length is not greater than 17 cm.

The accuracy of the bearing calculation is a function of the azimuth of the sound source. It can be seen from **Figure 5** that when the source is central in front of the microphones an accuracy of approximately 5° can be expected while sound from the sides achieve around 11° and only 25° at the edge which all together gives an average figure of 9°. The highly directional nature of the electret microphones response characteristics meant that further study the longitudinal response was not worthwhile.
The PIC16F88 microcontroller used in this project was programmed using the Ultimate_PIC tools which are based on the Labview programming environment. The beta version of Ultimate_PIC is available from The Center for Engineering Education Outreach (CEEO) at Tufts University Massachusetts.

The assembler and hex files for this project Binaural_v132.asm and Binaural_v132.hex can be freely downloaded from the Elektor website [3] where a pre-programmed PIC controller can be ordered as an alternative from the SHOP section. The PCB layout and component placement is shown in **Figure 4**; the PCB artwork files are also available for download from [3].

Construction and Test

A picture of the prototype is shown in **Figure 6**. Shielded cable must be used to connect the two microphones to the controller board to help reduce pick-up of electrical noise.

The current consumption of just 10 mA can be supplied by almost any 5 V stabilised power unit. The microphones are mounted 17 cm apart, pointing forwards. A 500 Hz tone is an ideal sound source for test purposes but voice/music from a radio is also suitable. Turning the sensitivity preset to the left will increase the sensor sensitivity.
A simple DC output level can also be achieved by connecting a 2R/R resistor network to the 5-bit Digital output (**Figure 7**). The resultant DC output level is buffered by IC1A.

(060040-I)

Web Links
[1] *www.convict.lu/Jeunes/RoboticsIntro.htm*
[2] *www.ultimaterobolab.com*
[3] *www.elektor.com*

278 Compass Sensor for Lego Mindstorms NXT

SENSORS

Zeno Otten

A few years ago, a considerable amount of attention was devoted in Elektor Electronics to the construction of sensors for the intelligent control brick (RCX) from Lego Mindstorms [1].

There is now a successor. The NXT is the heart of the new Mindstorms. Using this system, computer hobbyists can develop, build and, in particular, program, numerous robots, to their heart's content. With the compass sensor that is described here the NXT can determine its direction with an

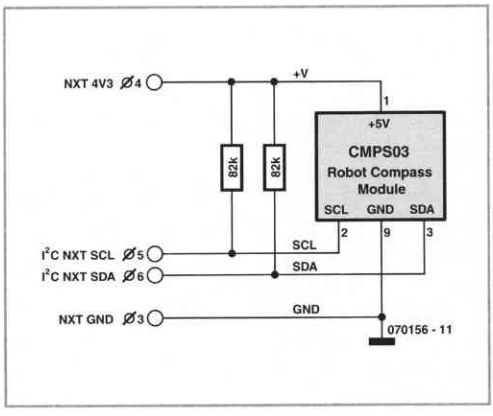

accuracy down to a few degrees. This allows a robot to be built that's capable of navigation.

The company Devantec [2] supplies a ready-to-go compass module type CMPS03. Two mutually perpendicular Philips KMZ51 hall-sensors are used to detect the Earth's geomagnetic field. With a small PIC-controller a value between 0 and 360 degrees is calculated and made available in digital form at the output of the module. The communication with the outside world takes place via the I^2C protocol or via a PWM output.

The module requires a 5 V supply voltage module is eminently suitable for use with the NXT.

The new NXT has the option of connecting sensors that use the I^2C protocol. This allows a sensor to be connected to the NXT using an RJ12 plug. The NXT does not have internal pull-up resistors on the I^2C bus. So, these have to be added externally. Lego suggest resistors with a value of 82 kΩ on both the data line (SDA) as well as the clock line (SCL).

References

[1] Compass sensor for Lego RCX, *Elektor Electronics* July/August 2002
[2] Devantec:
www.robot-electronics.co.uk/shop/Compass_CMPS032004.htm
[3] BricX:
http://bricxcc.sourceforge.net/

Software

The standard Lego Mindstorms software is based in dragging graphical function blocks. Only the parameters can be changed while the functionality of the blocks is fixed.

Not Exact C (NXC) is a programming language for the NXT that has a strong resemblance to C. This permits a much greater flexibility when programming. In particular when it concerns hardware that is not officially supported by Lego, such as this compass sensor. The compiler (BricX) [3] can be downloaded free, is simple to use and offers many options for programming the NXT.

The program compass.nxc (which can be downloaded free from the Elektor Electronics website as file number 070156-11.zip) continually reads the compass sensor. The measured values are then processed by the robot who will sequentially 'point' to North, South, East and West.
The values measured by the electronic compass can also be read from the display on the NXT brick.

(070156-I)

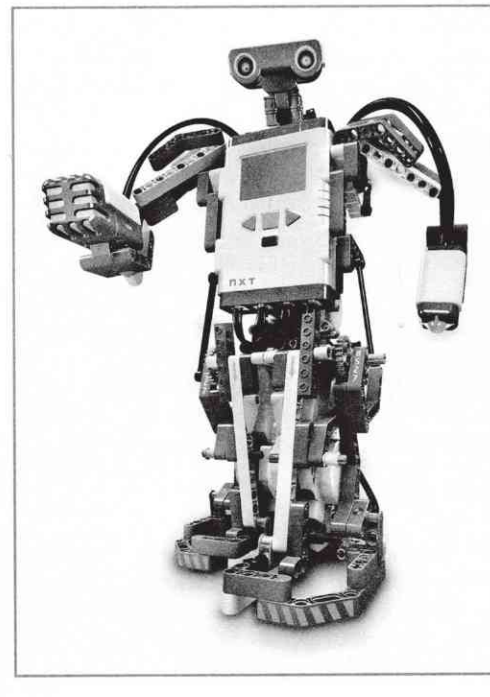

279 Servo to Motor Conversion

Paul Goossens

Servos, originating from their application in model building, are usually used to operate arms, feet and other 'tools' of a robot. In addition to these obvious uses they are also very suitable as a motor to drive the wheels of a robot, for example. To do this, the standard servo does need to be modified first however.

Servos have been used for a long time in the model construction arena. As a result they are readily available and often at attractive prices.

Standard servo

The purpose of a standard servo is to bring the shaft into a certain position and to keep it there. At the input the servo expects a train of digital pulses. The duration of these pulses determines the position that the shaft has to assume.

The internal electronics uses a potentiometer which is mechanically coupled to the shaft to measure the position of the shaft. If the length of the pulses does not correspond with the present position of the shaft then the electronics will drive the internal motor.

If the shaft is too far too the right then the motor will turn the shaft to the left and the other way around. The instant that the shaft reaches the correct position the motor will be turned off.

Small adjustment

A standard servo is therefore not suitable to turn wheels or similar things. However, with a little bit of tinkering we can make a servo suitable for this job.

The trick is very simple. The potentiometer is replaced by a voltage divider with two 10 kΩ resistors. In this way the electronics 'thinks' that the shaft is always in the centre position.

If we now give the servo a pulse of 1.5 ms duration then nothing happens. The servo will

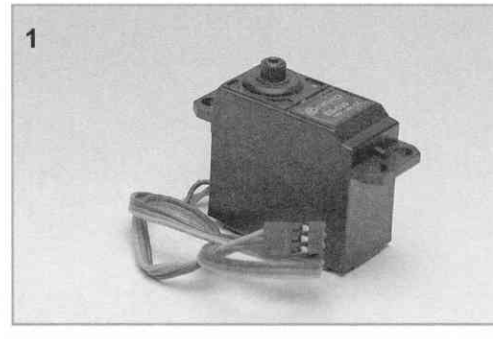

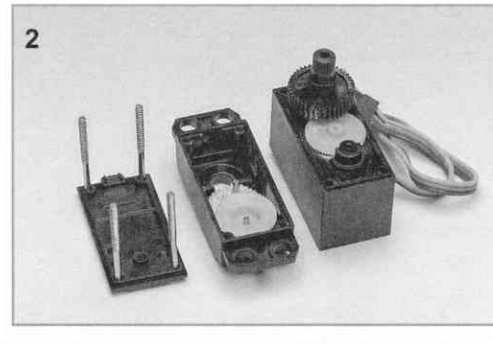

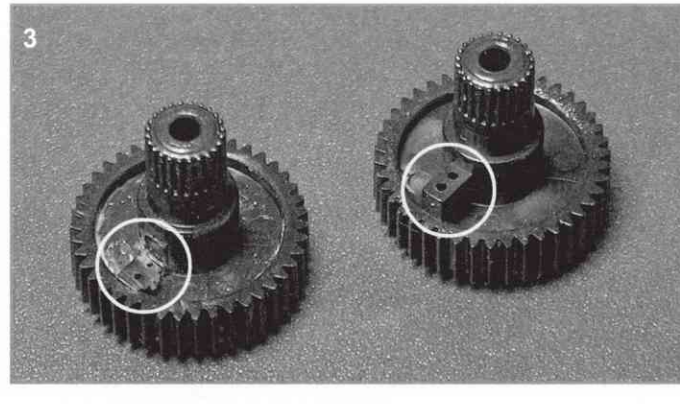

turn the motor off. If we make the pulse duration 1 ms then the servo will attempt to turn the shaft to the left-most position. To that end the servo will let the motor turn to the left. On its sensor input it continues to 'see' that it is in the centre position. The motor will therefore continue to turn to the left.

To let the motor turn the other way we supply a pulse that lasts longer than 1.5 ms (2 ms, for example). The motor stops again when we make the pulse 1.5 ms long.

Note that most servos have a mechanical end-stop, which prevents the shaft from turning any further. We have to remove these two end-stops first otherwise the motor will go up in smoke during testing!

Mechanical

This modification doesn't mean much from the electronics perspective. The skill is to do this in the small housing of a servo. As an example we use a cheap servo from Conrad (**Figure 1**). On the bottom of the servo are four screws that we remove first. After this, the bottom cover can be removed.

Carefully loosen the cover plate. This contains a number of gears that can easy drop out. We need to know exactly how these are placed in the enclosure, because we need to put them back in the exact same place later on!
Taking a picture of the inner works including the gears can be a very handy reference later one when putting the servo back together. Once that is done the servo looks like **Figure 2**.

Remove the output shaft. This sits on the shaft of the potentiometer. This shaft is fitted with a ridge, which together with 2 ridges in the housing forms the mechanical end-stop. This is undesirable, therefore remove this ridge with a sharp knife (**Figure 3**).

The next job is to remove the PCB from the housing. Should this not come out easily, then a careful push on the shaft of the potentiometer usually ensures that it comes out of the housing after all. The motor should have a small gear. This will sometimes be caught by the housing. If that is the case you need to retrieve the gear and put it back on the motor shaft.

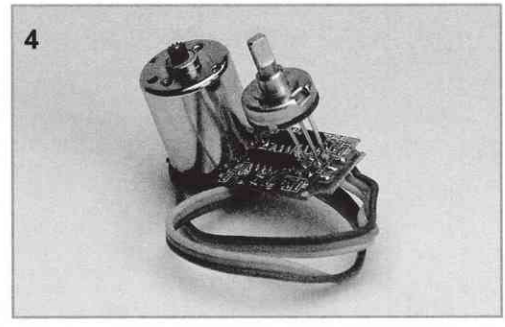



The potentiometer and motor are easily recognised. We now replace the potentiometer with two resistors. The resistors are each individually soldered to one of the outside connections, where the potentiometer used to be. The other connections for both resistors are then soldered to the middle connection.
Voilà, the servo is now converted. If all is well, your servo will look about the same as our prototype in **Figure 4**.
What's left to do is to put the servo back together. Make sure that all the gears are in the correct position and everything is free to rotate. Also check that the little gear on the motor is still in the right place.

Finally we screw the bottom cover back in place. The servo is now ready for use, but now as a motor and no longer as a servo!

(070358-I)

280 Switch-Mode 555 Supply

Martijn Geel

This switch-mode power supply is built around a 555 timer IC. It provides a maximum output voltage of 40 V with a 12-V input voltage. The voltage can easily be set using a Zener diode, and it must be higher than the input voltage (the minimum output voltage is always 12 V).

The NE555 is used in an unconventional way here. In the normal configuration, the output of the oscillator IC is low longer than it is high. With the configuration used here, the output can be high for a shorter time than it is low.
The NE555 switches FET T1 on and off. When T1 is conducting, energy is stored in L1. When T1 stops conducting, this energy is transferred to C1 and C2 via Schottky diode D1, so the voltage on these capacitors rises.
The voltage is limited by Zener diode D2. If the voltage rises above the Zener voltage, the current through the Zener diode causes T3 to conduct. This reduces the voltage on pin 5 of the NE555, which in turn decreases the relative duration of the high level on pin 3. T1 thus conducts for a shorter interval, so less energy is stored in L1 and the output voltage is stabilised.
Current limiting is provided by R6, R5 and T2. If the voltage across R6 is more than 0.6 V, T2 starts to conduct. This drives T3 into conduction, causing the voltage to decrease in order to limit the current. C5 and R7 provide a soft-start effect. The value of R1 can range from 22 kΩ for an output voltage of 15 V to 10 kΩ for an output voltage of 40 V.
For the sake of safety, limit the Zener voltage to a maximum of 40 V. T1 and T2 can be rated for a maximum of 50 V. The FET is not critical; you may already have one in your spare parts bin that can switch enough current. If the coil becomes warm, the core is too small or the wire is too thin.

The Schottky diode is the only component that is actually critical. Do not use an ordinary diode, since it will become much to hot. You're bound to find a Schottky diode in an

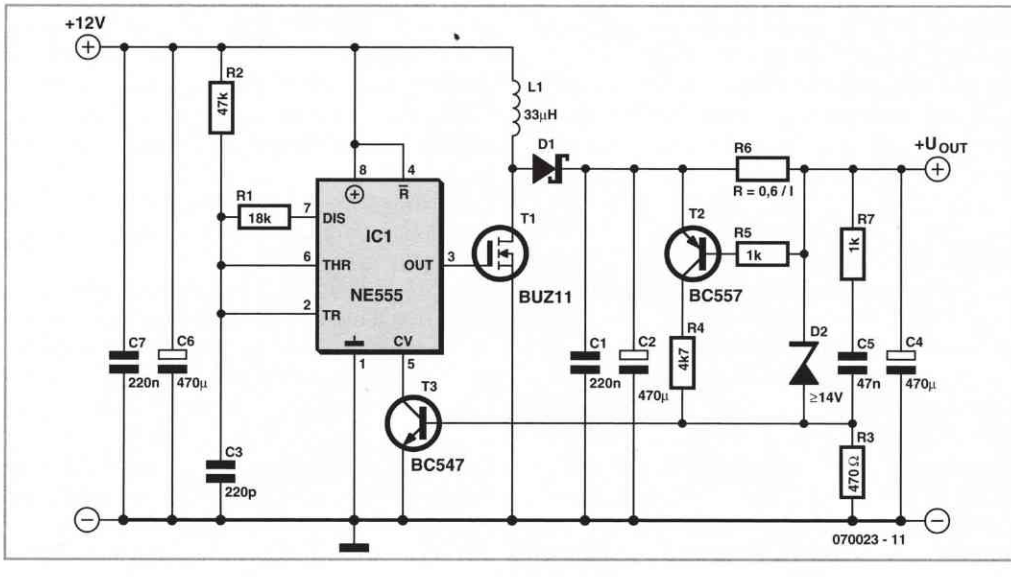

old computer power supply (just check for a forward voltage of 0.2 V on the diode range of your multimeter).
The supply shown here can deliver approximately 200 W. The input supply voltage can range from 7 V to 15 V. Don't forget that the maximum voltage the NE555 can handle is 15 V.
Finally, this power supply is not short-circuit proof. A slow-blow fuse on the 12-V side is recommended.

(070023-I)

281 Receiver for RC5 Remote Controls

COMMUNICATIONS

Thomas Möll

Software decoding of remote control signals using the RC5 protocol does not present a significant challenge to a modern microcontroller, while for a pure hardware solution specialised RC5 decoder ICs are available. Nevertheless it is interesting to look at how we might process RC5 signals using ordinary components. This way not only do we learn about how the code works, but also the resulting circuit is easier to adapt to different applications.

Although the circuit was originally designed just to display the address and command emitted by a 'universal remote control' when each button was pressed, it could be used, for example, to add a remote control facility to an audio amplifier using a standard remote control unit. Indeed, virtually any household appliance could be controlled in this way: just choose an address that is not yet allocated and define your own commands.

The TSOP1736 infrared receiver inverts the bits in the received stream. T1 inverts them again so that they are now available with the correct polarity. The LED connected to its collector indicates when data bits are received.

This signal is low (0 V) for the first half of the start bit and high (5 V) for the second half. This pattern represents a '1' bit, and FF01 (CD4013) will be set. The complementary output of this flip-flop will therefore be low, enabling the CD4040 divider. The 18 kHz square wave clock for this divider is generated by our old friend the NE555. At the same time, the differentiator formed by C11 and R23 generates a low-going pulse which is inverted by Schmitt trigger inverter ST8. The resulting highgoing pulse is used to clear the CD4015 shift register.

The Q4 output of the CD4040 (pin 5) carries a square wave at 1125 kHz, corresponding to a period of 888.8 μs and a pulse width of 444.4 μs. Output Q5 (pin 3) of the CD4040 is inverted by Schmitt trigger ST4; the output of this gate is therefore initially high. The diode matrix forms an AND gate which sets one input to ST1 high just as Q4 rises for the first time. Since the complementary output of FF02 is also high, a high-going pulse (inverted by ST2) is delivered to the CD4015 shift register, causing it to take one sample of the incoming data stream. This process is repeated 1.333 μs after the start of each bit period, or exactly three-quarters of the way into each bit. This is the key to the circuit: the value of the signal sampled at this point gives the encoded data bit.

After 14 bits the RC5 packet is complete. At this point a diode matrix forming an AND gate at the outputs of the CD4040 sets FF02. Its output goes low and the clock to the shift register is blocked.

One cycle of the transmit protocol takes 64 bit times. Q11 of the CD4040 counter goes high 32 bit times after the start of the RC5 packet, resetting FF01 and thereby stopping

the counter. The data bits at the outputs will be held until a new packet from the transmitter sets FF01 again, whereupon the output is cleared and the bits read in afresh. The stop pulse on pin 11 of the CD4040 can be used to validate the output data.

When building the circuit it is a good idea to fit a test point at the output of the NE555 so that the 18 kHz clock can be set accurately. All of the timing in the circuit depends on this signal.

(070089-I)

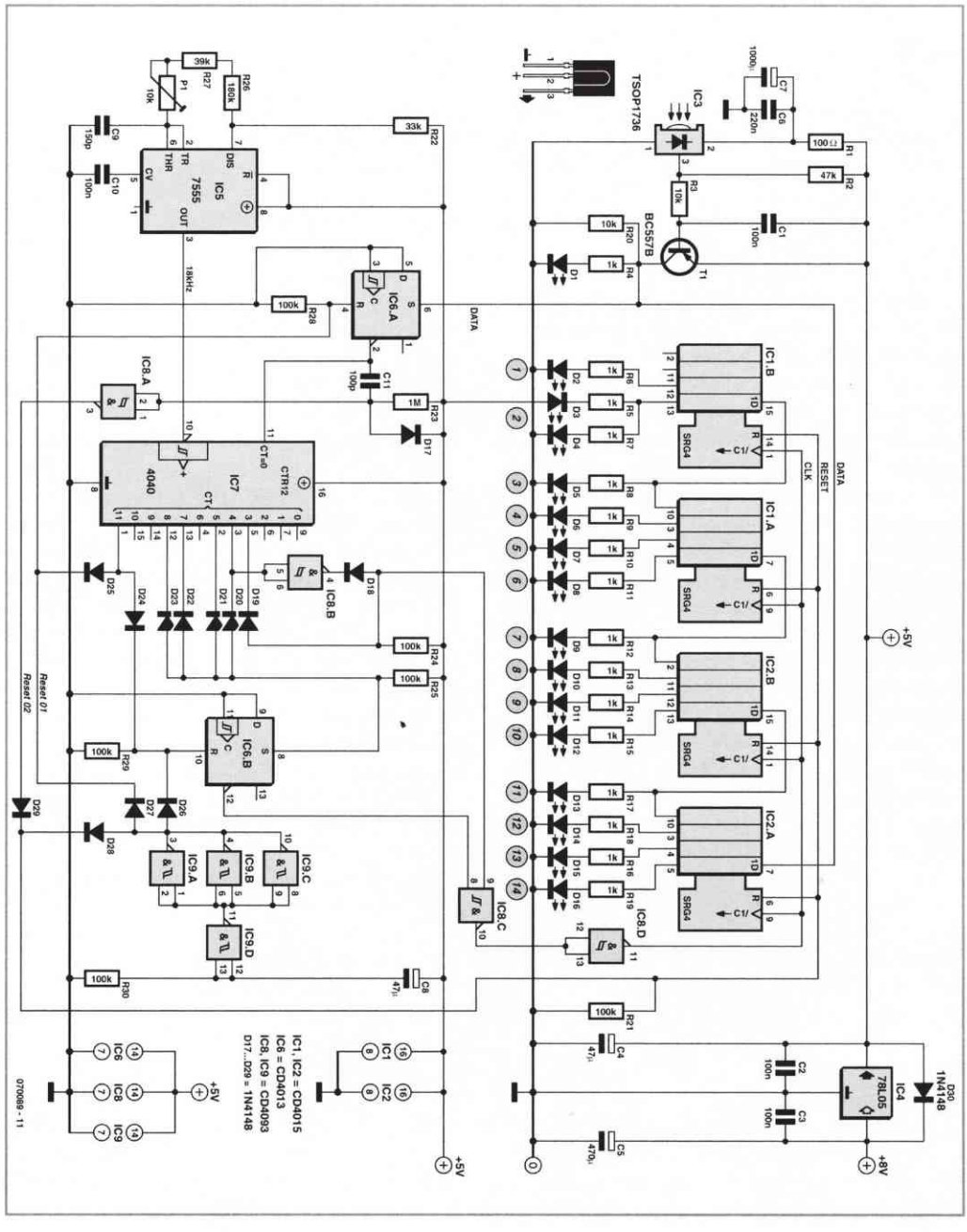

282 Ultrasonic Distant Obstacle Detector

SENSORS

B. Broussas

The first sensor a robot usually gets fitted with is an obstacle detector. It may take three different forms, depending on the type of obstacle you want to detect and also – indeed, above all – on the distance at which you want detection to take place.

For close or very close obstacles, reflective IR sensors are most often used, an example of such a project appears elsewhere in this book. These sensors are however limited to distances of a few mm to ten or so mm at most.

Another simple and frequently-encountered solution consists of using antennaelike contact detectors or 'whiskers', which are nothing more than longer or shorter pieces of piano wire or something similar operating microswitches. Detection takes place at a slightly greater distance than with IR sensors, but is still limited to a few cm, as otherwise the whiskers become too long and hinder the robot's normal movement, as they run the risk of getting caught up in things around it.

For obstacles more than a couple of cm away, there is another effective solution, which is to use ultrasound. It's often tricky to use, as designers think as if they needed to produce a telemeter, when in fact here we're just looking at detecting the presence or absence of obstacles, not measuring how far away they are.

So here we're suggesting an original approach that makes it possible to reduce the circuit required to a handful of cheap, ordinary components. Our solution is based on the howlround or feedback effect all too familiar to sound engineers. This effect, which appears as a more or less violent squealing, occurs when a microphone picks up sound from speakers that are connected to it via an amplifier. Feeding back the output signal from the speaker into the input (the microphone) in this way creates an acoustic oscillator.

Our detector works on the same principle, except that the microphone is an ultrasound receiver while the speaker is an ultrasonic emitter. They are linked just by a very easily-built ordinary amplifier. Feedback from the output to the input occurs only when the ultrasonic beam is reflected off the obstacle we are trying to detect.

As **Figure 1** shows, the receiver RXUS is connected to the input of a high-gain amplifier using transistors T1 and T2. As the gain of this

1

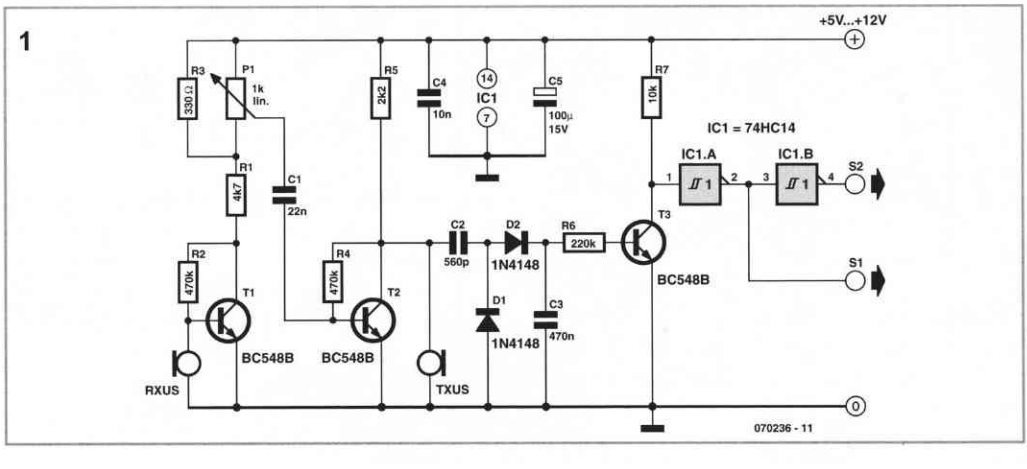

stage is very high, it can be reduced if necessary by pot P1 to avoid its going into oscillation all on its own, even in the absence of an obstacle. The output of this amplifier is connected to the ultrasonic emitter TXUS, therby forming the loop that is liable to oscillate due to the effect of feedback.

When this takes place, i.e. when an obstacle is close enough to the ultrasonic transducers, a pseudo-sinewave signal at their resonant frequency of 40 kHz appears at the amplifier output, i.e. at the terminals of the transmitting transducer. This signal is rectified by D1 and D2 and filtered by C3 and, if its amplitude is high enough, it produces a current in R6 capable of turning transistor T3 on to a greater or lesser extent.

Depending on the nature and distance of the obstacle, this process does not necessarily happen in a completely on/off manner, and so the level available at T3 collector may be quite poorly-defined. The Schmitt CMOS invertors are there to convert it into a logic signal worthy of the name. So in the presence of an obstacle, S1 goes high and S2 goes low.

Powering can be from any voltage between 5 and 12 V. The gain, and hence the circuit's detection sensitivity, does vary a bit with the supply voltage, but in all cases P1 makes it possible to achieve a satisfactory setting.

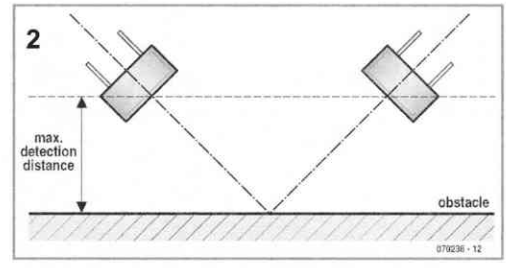

Although it is very simple, under good conditions this circuit is capable of detecting a normally-ultrasound-reflective obstacle up to around 5 or 6 cm away. If a smaller distance is needed, you simply have to reduce the gain by adjusting P1.
Building the circuit is straightforward. Both transducers are 40 kHz types that can be found in any retailers, and the other components couldn't be more ordinary. However, one precaution is needed when wiring up the transducers. Even though they aren't strictly speaking polarised as such, one of their terminals is common with the metal case, and this is the one that must be connected to the circuit earth, on both emitter and receiver.
The circuit should work at once, and all you have to do is adjust P1 to set the detection distance you want – but this is also dependent on the positioning of the transducers. For optimum operation, we recommend you angle them as shown in **Figure 2.**

(070236-I)

283 Controlling Servos

ACTUATORS

Using a PIC programmed in Basic, a Basic Stamp or a Cubloc

C. Tavernier

Through robotics, radio-control servos are currently experiencing a new lease of life, thanks to their characteristics, which although not originally designed for such applications, turn out in fact to be well suited to it.

Current radio-control servos are very compact, bearing in mind they contain not only their own mechanism, but also dedicated drive electronics, which only need simple TTL or CMOS logic signals as an input. The power they are able to supply can be quite considerable, for the most powerful of them were originally intended for 'large' model planes or boats; and lastly, they are usually supplied with a host of accessories such as crank arms,

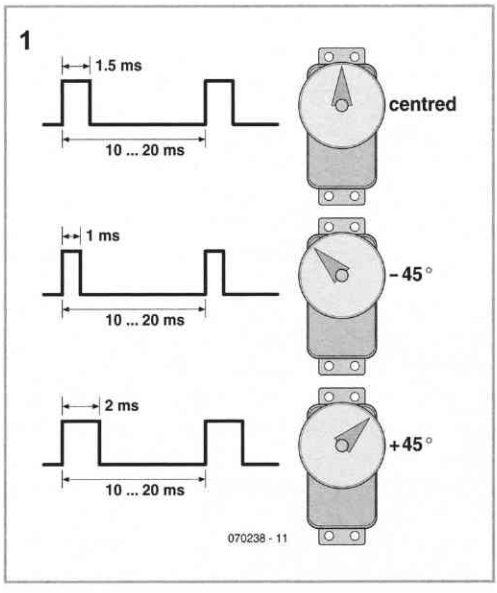

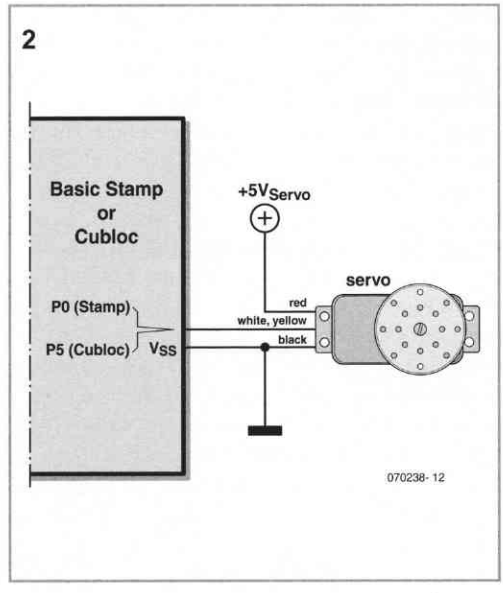

perforated wheels, etc., making it easier to interface them with the elements to be operated.

There are currently two fundamental ways of using a servo in a robot. The first, described elsewhere in this book, consists of converting the servo into a propulsion motor, which admittedly is rather taking it away from its original function. The second, which we're going to be looking at here, involves its use for positioning. Whether in an arm, or to turn a platform carrying a camera, a telemeter, or any other unit, our servo is ideal for this.

We won't insult you by telling you what a servo is like, since even if you aren't a radio-control enthusiast, you're bound to have come across them before. However, here are just a few pieces of information that it's important to be aware of so as to be able to make use of them.

In electrical terms, a servo has just three colour-coded wires. The red and black wires are for powering it, at between 4.8 and 6 V. The third wire, yellow or white (or in practice any colour other than red or black), is used to convey commands to the servo in the form of pulse-widthmodulated (PWM) signals.

Figure 1 illustrates both the coding principle of these pulses and the effect they have on the position of the servo. Note first of all that they must be repeated at such a rate that there is not more than 10–20 ms separation between two successive pulses.
In theory, this repetition is not absolutely vital; but with it, the servo will be able to maintain the position set by the width of the pulses received. If the pulses do not repeat, the servo will indeed go to the position dictated by the last pulse received, but, as soon as that stops, the slightest force on its shaft will cause it to lose the position attained.

Notice from the figure:

- a 1.5-ms pulse places the servo in its position referred to as centred or rest;
- a 1-ms pulse makes the servo turn to its maximum anti-clockwise position, which usually represents an angle of 45° with respect to its rest position;
- a 2-ms pulse makes the servo turn to its maximum clockwise position, which too usually represents an angle of 45° with respect to its rest position.

Intermediate positions can be obtained by varying the pulse width between 1 ms and 2 ms.

For use in robotics, it is even possible to go further and apply pulses a little shorter than 1 ms or a little longer than 2 ms to the servo, thereby achieving a total angle of rotation of 180°. But watch out! At this point, we have gone outside the specifications for the servo, which is in danger of jamming in these extreme positions, destroying its motor, its electronics – or if you're lucky, both at once!

Connecting a servo to a microcontroller (Basic Stamp, PIC, Cubloc) is very simple, as shown in **Figure 2**. The only point to watch out for is the servo power supply. Given the relatively high current drawn by the servo when it turns, it's best to supply it off a separate voltage rail from the microcontroller. Where this is not possible, you need to ensure excellent decoupling between them – for example, by supplying the servo and the microcontroller via two separate regulators.

As far as the software is concerned, controlling a servo using a Basic Stamp or a PIC programmed in Basic requires only a very few lines of program. In fact, all that's needed is to call up the two instructions PULSOUT and PAUSE.

Here, by way of an example, is a program that makes a servo turn slowly from its extreme position on one side to its extreme position on the other side, and so on. In this way it can, for example, move a sensor in one plane over a total amplitude of 90°, see **Listing 1**. The instruction PULSOUT generates pulses with a variable duration from 100 × 10 μs to 200 × 10 μs depending on the changing value of the loop variable b2, while the spacing between these pulses is set at 15 ms by means of the instruction PAUSE.

This program is written here in Basic Stamp I language, but transposing it for Basic Stamp II or for use with a PIC programmed in Basic only requires modification of the end values and the loop variable b2 increment. The resolution of the instruction PULSOUT is now 2 μs instead of 10 μs, so the various values need to be multiplied by 5. Using a servo with a Cubloc from Comfile Technology is just as simple, but uses an instruction called PWM, as per **Listing 2**.

In this type of application, the advantage of the Cubloc over the Basic Stamp is that the PWM command generates the pulses indefinitely, even if the program continues on to something else. In the case of the Basic Stamp, the instruction PULSOUT generates only one pulse, and so has to be called from a loop in order to produce them continuously,

Listing 1

```
' Basic Stamp I and II or in Basic
  programmed PIC version

loop:
  for b2 = 100 to 200
    for b3 = 1 to 5
      pulsout 0,b2 ' servo connected
                   to port P0
      pause 15
    next
  next
goto loop
```

Listing 2

```
' Cubloc Version

Const Device = CB220
Dim Position As Integer
Low 5 ' Servo is connected to port P5
Do
  For Position = 2300 to
      Position = 4300 Step 20
        Pwm 0, Position, 32768
      Delay 100
  Next
Loop
```

preventing the Basic Stamp from doing anything else. If you don't want to use a Cubloc, another solution consists in using a specialized IC, like the MIC 800 from Mictronics (which can control up to 8 servos simultaneously in a stand-alone manner (if necessary, refer to circuit 096 on page 161)).

(070238-I)

284 PWM Voltage Dropper

POWER SUPPLIES, BATTERIES AND CHARGERS

Stefan Brandstetter

This circuit was developed to allow a car trailer, designed for 12 V operation, to be used as a trailer for a van with a 24 V supply. A number of copies of the circuit we made, for the left and right indicators, brake lights, number plate light and reversing lights, and these have been in trouble-free operation for several years.

The advantage of this compact circuit is that it dissipates very little power because it uses pulse width modulation. In addition, its quiescent current consumption is practically zero.

A simple pulse generator is constructed using IC1.A, C2, R1 and R2. Normally (when T1 is not conducting) RC combination R4/C3 ensures that IC1.B passes the square wave signal to FET switch T2. Shunt resistor R3 measures the output current. If the maximum safe output current is exceeded, T1 turns on and short-circuits C3; IC1.B no longer passes the square wave signal to the switching transistor. The output current falls to zero, T1 turns off and C3 is recharged via R4. As soon as the

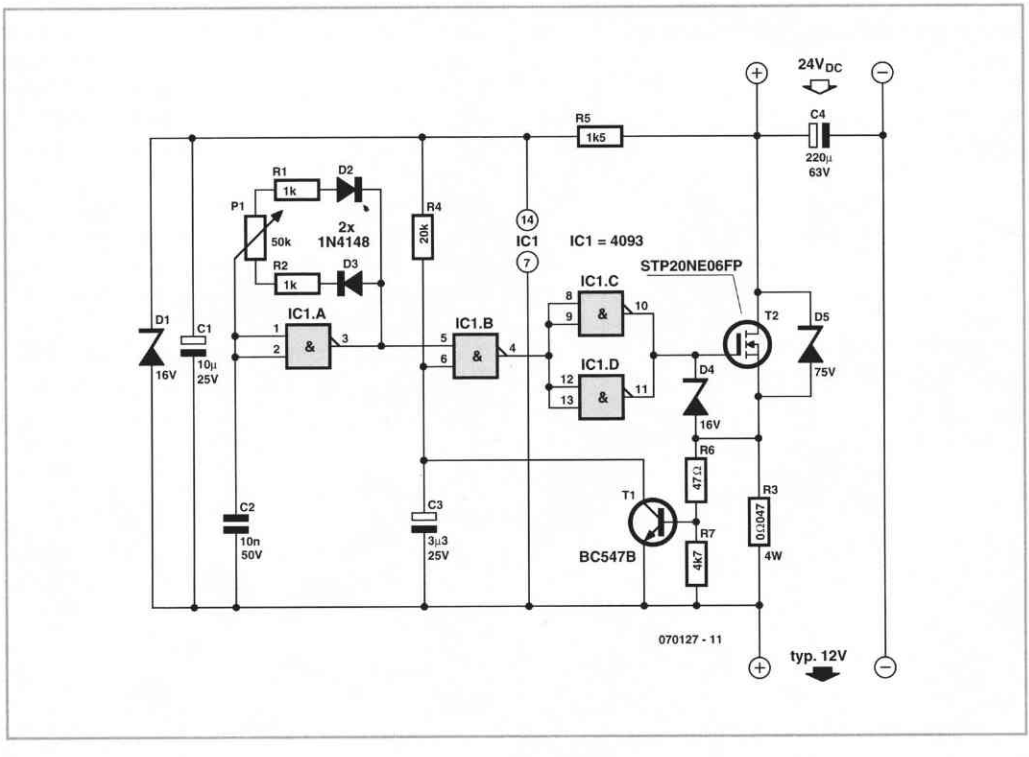

input threshold of IC1.B (half the supply voltage) is exceeded, the PWM signal once again starts to drive T2. Thus even if there is a continuous short circuit on the output there will be occasional pulses of output current.

R5, D1 and C1 reduce the input voltage of 24 V to a value of 16 V more suitable for powering the CMOS 4093 Schmitt trigger IC. D4 and D5 protect T2 from voltage spikes, which are practically unavoidable in this circuit because of the inductance of the wiring. Any standard Nchannel FET able to withstand 100 V can be used for T2.

With the component values shown the circuit is suitable for use with 12 V lamps at up to 60 W. The current limit, set by R3 (47 mΩ) is around 12 A.

The current limit is essential because cold lamps present a very low resistance when voltage is first applied. The mark-space ratio is set to approximately 1:3 (25% on-time) using P1. The circuit can be modified for use at higher currents, and it can also be used as the basis of a simple and efficient speed controller or light dimmer.

(070127-I)

285 Light Sensing with an LED

SENSORS

Andreas Grün

Many robotic applications require a sensor to measure light levels. The conventional approach as shown in **Figure 1** uses an A/D converter to measure the voltage drop across resistor R1 produced by the photo current through a photo transistor.

The fixed value of R1 limits the light range which can be measured; a high resistor value is suitable for measuring low light levels while a low resistance is good in bright conditions. The resolution of the A/D converter also plays a part in determining the range of light levels that can be measured.

A little-used property of a standard LED is its reverse-biased photocurrent mode. An LED also produces a light-induced photocurrent but at a much reduced value compared to a photo-transistor.

Direct measurement of the current is not so easy but another property of the diode can be exploited which is described in [1]. In this paper it explains that a useful property of a reverse-biased LED is its relatively large capacitance, the technique is to charge up this capacitor and then allow the photocurrent to discharge it. The time taken for the capacitor to discharge is dependant on the amount of light falling on the LED (**Figure 2**). Charging

1

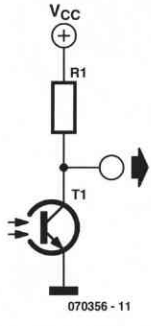

2

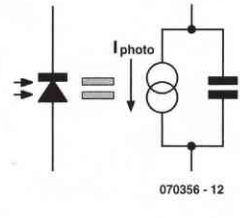

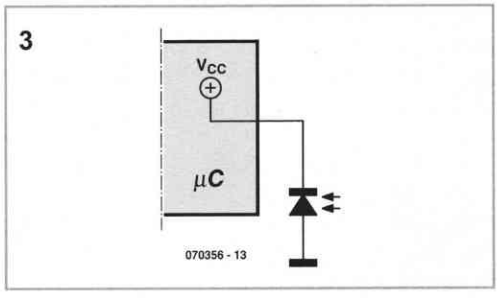

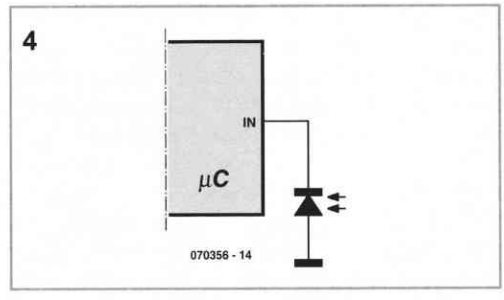

and time measurement can be easily performed using a single I/O pin of a microcontroller and switching it between output mode and high-impedance input mode. The measurement is performed in two stages:

1 The pin is configured as an output and set to high to charge up the LED capacitance (**Figure 3**).

2 The pin is configured as an input Pin (any pull-up resistor is disconnected) and the time is measured until the input voltage level falls below the lower input threshold level (**Figure 4**).

The Example program is a listing for an Atmel AVR processor which measures light intensity. The program toggles all the output bits

Listing (example program)

```
#include <avr/io.h>
#include <avr/interrupt.h>
#define LEDPIN 0x40          // LED on PB6

int main()
{
  unsigned char cr=0,cb=0;
  DDRB = 0x00;               // PORTB input
  DDRA = 0xff;               // PORTA output for display LEDs
  PORTA = 0;                 // off
  PORTB = LEDPIN;            // PB6 hi

sei();

while(1)
{
  if((PINB & LEDPIN) == 0)          // discharge complete
  {
    PORTB = LEDPIN;                 // PB6 hi
                                    // multiple times to get enough charging time
    DDRB |= LEDPIN;                 // PB6 output and hi, charges LED
    DDRB |= LEDPIN;                 // PB6 output and hi, charges LED
    DDRB |= LEDPIN;                 // PB6 output and hi, charges LED
    DDRB |= LEDPIN;                 // PB6 output and hi, charges LED

    DDRB &= ~LEDPIN;                // PB6 input, still charging w/ pullup
    PORTB = 0;                      // switch off pullup
    PORTA ^= LEDPIN;                // toggle PORTA for display LEDs
  }
}
return(0);
}
```

from port A after each cycle so that it produces an output square wave with approximately 50 % duty cycle at a frequency proportional to the measured illumination. The frequency varies from millihertz (in a darkened room) up to several hundred kilohertz when light shines directly onto the LED. This measurement range would be difficult to achieve using an A/D converter. Narrow beam LEDs have a corresponding narrow 'detection angle' making them more directional which may be beneficial in some applications. Different LEDs are sensitive to specific colours which can also be useful in some robotic applications.

(070356-I)

Web Link
[1] *www.merl.com/publications/TR2003-035/*

286 zBot: 10-A Power Stage

ACTUATORS

... for DC Motor

Jens Altenburg

If you look at the chassis of the zBot vehicle, you'll find two parts requiring intelligent control: the steering servo and the DC motor [1].

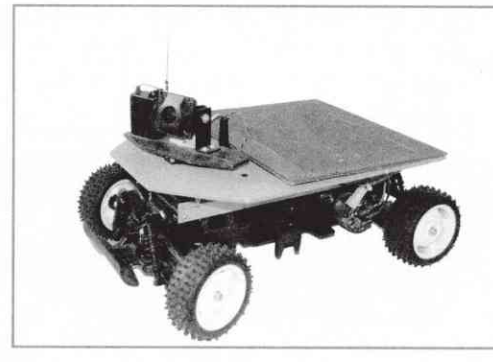

The so called H-bridge is the normal circuit for electronic control of revolution speed and direction. The DC motor of a Tamiya car is powerful enough to propel zBot at up to 20 miles per hour. The motor then consumes more than 10 A, so we choose high-current power MOSFETs for the driver stage. There are lots of different devices to choose from.

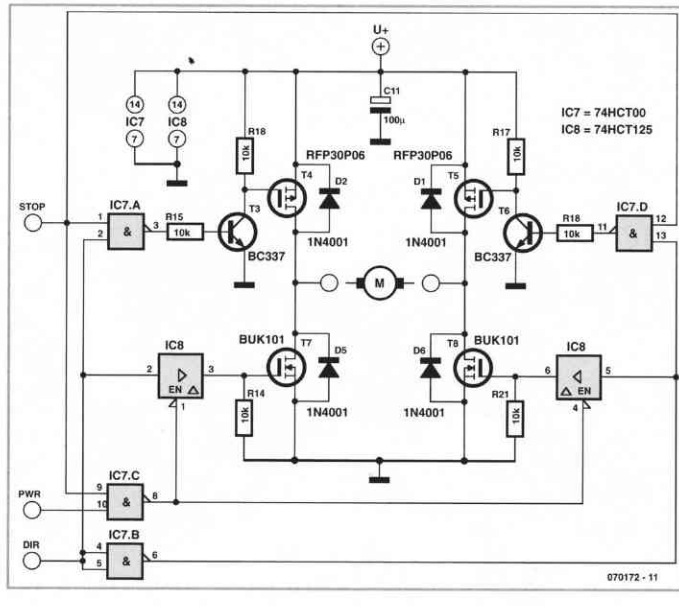

The MOSFET we require has to supply the maximum motor current and, importantly, it has to be switched with gate voltages of about 5 V. In this case, the microcontroller switches the power stage ('low side') directly. For high side driving level shifters are necessary.

The schematic of the H-bridge power stage shows a

few inverters, NAND gates and two tri-stateable drivers. These logic functions are very important as the easier way, i.e.., directly controlling all four MOSFET has a fatal disadvantage.

In case of a software crash it could happen that two ore more MOSFETs are switched on incorrectly, for example, T4 and T7. In that case, the current through the transistors is limited by the internal resistors of the MOSFETs (about 10 mΩ) only. Such a fatal error would destroy the MOSFETs. The logic functions configured here effectively avoid illegal states.

To control the DC motor, three signals are needed: DIR, PWM and STOP. DIR controls the direction of the motor revolution, PWM the speed, and STOP brakes the motor.
The software module for the DC motor is called dcm.c.

(070172-I)

[1] The complete document called Zbot — the Robot Experimental Platform is available for free downloading from the Elektor website. The file number is 070172-11.zip (July/August 2007).

287 Fast Charger for NiMH Batteries

POWER SUPPLIES, BATTERIES AND CHARGERS

Antoine Authier
& Karel Walraven

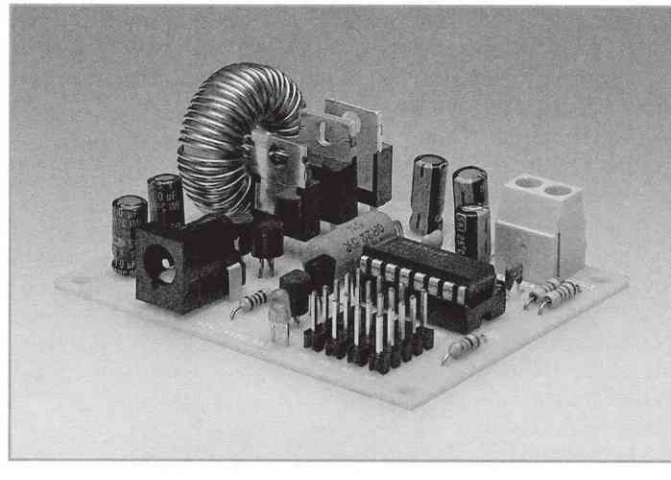

At the time of writing, the latest AA NiMH (Nickel Metal Hydride) batteries have a capacity of up to 2900 mAh. Using an original-type conventional battery charger (supplying 125 mA), the charging time will be extremely long.

The charger we propose here should accelerate the recharging process of NiMH batteries, which hare becoming more and more common (we must do our bit for the environment).

The design is based on the MAX712 made by Maxim (Integrated Products to be precise, which was bought by Dallas Semiconductor; quite a long story), operating in switched mode, it can supply a maximum fast charge current calculated as

$$I_{charge} = \frac{250\,mV}{R1}$$

or not less than 1 A if R1 = 0.25 ohms. Under these conditions, the battery will be charged in just over two hours.

The Maxim circuit is not only intelligent, but it also includes an ADC (analogue to digital converter), a system to detect charge completion, a timer, and a temperature monitoring module. The four configuration pins that are included allow users to set the parameters as they please. These pins are used to set the

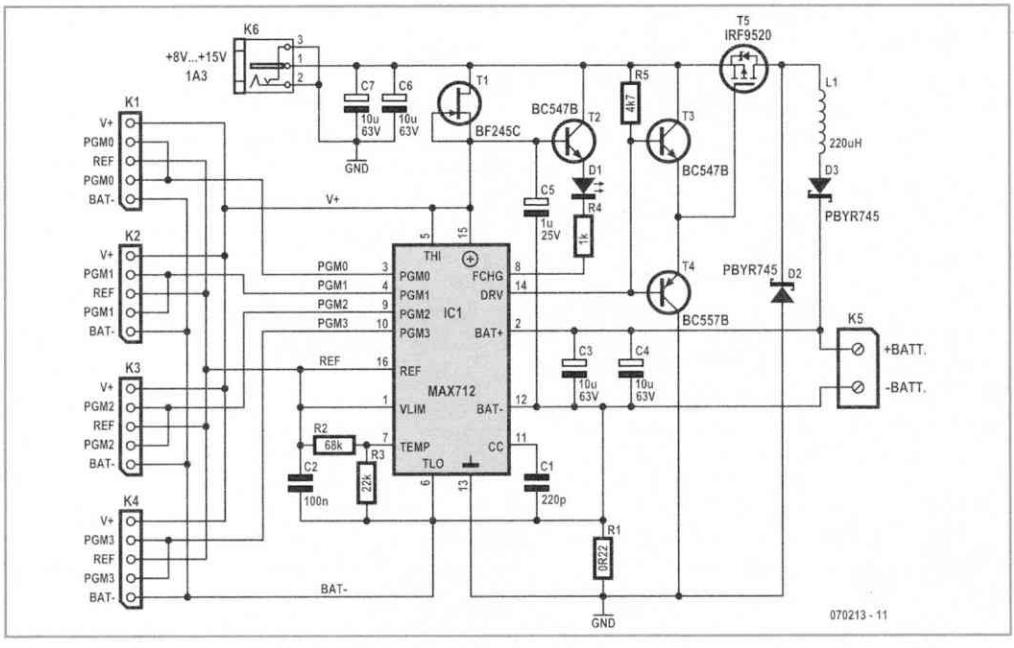

parameters for the number of cells to be charged, the maximum charging period, as well as the method to detect when it is fully charged (inflexion point or negative slope). You can refer to the datasheet to find out more. The MAX712 is intended for NiMH batteries, with charge completion at the inflexion point of the voltage curve ($\partial V/\partial t = 0$).

The maximum power supply voltage is 15 V. The power supply voltage must be at least 2 V above the maximum charging voltage in order to compensate for voltage fluctuations during charging. Therefore, for a maximum charging voltage of 1.6 V per cell, a 15-V power supply voltage is used to charge 8 series-connected batteries. A 12-V voltage level (supplied, for example, by a car battery) is used to recharge six cells. The power supply must be able to supply 1 A. It is important to be certain of its specification. If the requirement is not fulfilled, the integrated circuit will not operate correctly and may not correctly detect completion of the fast-charge (entailing a risk of damage that could affect the connected batteries).

Setting the circuit parameters

- The PRGM0/PRGM1 pins are used to regulate the number of cells to be charged. A note concerning the use of a battery cradle: during recharging: each contact can represent a 1-Ω series resistance, which is

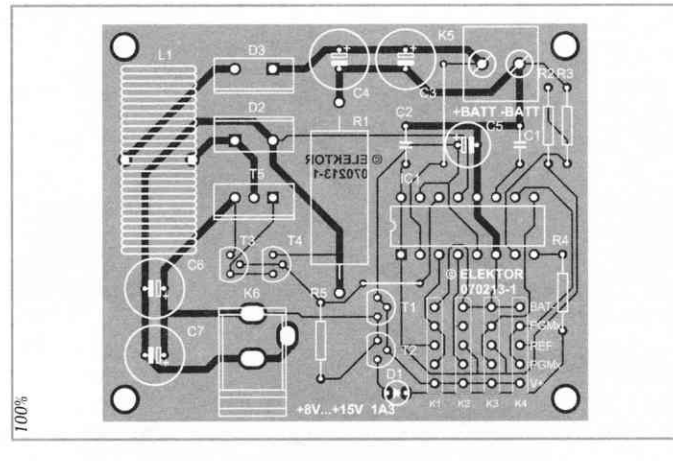

COMPONENTS LIST

Resistors
R1 = 0.22 Ω 5W
R2 = 68 kΩ
R3 = 22 kΩ
R4 = 1 kΩ
R5 = 4kΩ7

Capacitors
C1 = 220 pF
C2 = 100 nF
C3, C4, C6, C7 = 10 µF 63V radial
C5 = 1 µF 25V radial

Inductor
L1 = 220 µH suppressor choke

Semiconductors
D1 = LED
D2, D3 = PBYR745
T1 = BF245B or -C
T2, T3 = BC547B
T4 = BC557B
T5 = IRF9520
IC1 = MAX712CPE

Miscellaneous
K1-K4 = 5-way SIL pinheader
K5 = 2-way PCB terminal block, lead pitch 5mm
K6 = DC supply jack, PCB mount
PCB no. 070213-1, see Elektor Shop

seen as a 1-V potential difference at 1 A. The power supply voltage may not be adequate for this configuration – therefore, it is preferable to verify this detail before beginning the project.

- For security reasons, it is preferable to properly configure the maximum charging period with the PRGM2/PRGM3 pins.
- On this setup, the temperature control circuit for the batteries is deactivated.

At the end of the fast-charge, the circuit will power the batteries with a maintenance charge (trickle). Let's examine the circuit's electronics. T1 is uses as a current source supplying the 8 mA necessary to power the MAX712. D3 ensures that the battery does not discharge into the circuit in case it is not powered.

The LED D1 lights up when the circuit is in fast-charge mode. T5 may be mounted on heatsink, if necessary. The characteristics of coil L1 are not critical; a traditional 100 µH/5 A suppressor choke will work fine. The same holds true for diodes D2, D3 and the MOSFET transistor T5; they too are not critical in this application. You can use any Schottky diode that can withstand 3 amps and include any MOSFET with a lower drain resistance.

A compact PCB was designed for the circuit. Mounting the components should be all plain sailing, but do not forget the two wire links on the board. Inductor L1 is a toroid 'suppressor choke' with a good size. Connectors K1-K4 allow different charging parameters to be set up.

Since the calculation principle is the same as for the NiCd charger with the MAX713 on page 517, we refer you to the calculation example proposed there. Use the same tables to set the parameters of this circuit as the ones given in that article.

(070213-I)

288 Stepped Volume Control

MISCELLANEOUS ELECTRONICS AND DESIGN IDEAS

Raj K. Gorkhali

Louder music, sirens or speech in response to higher ambient noise levels? This simple circuit has the answer, and it may enable your robot to be at least as noisy or loudmouthed as the others in an arena.

The circuit consists basically of a microphone, a level detector, a 4-state counter and four

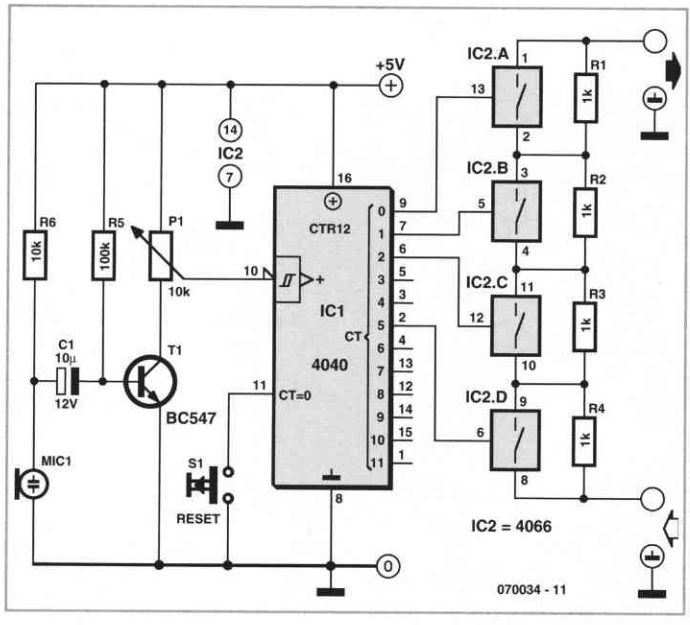

analogue switches connected to a resistive ladder network.

Looking at the circuit diagram, the signal from electret microphone M1 is amplified by T1 whose collector voltage appears across a potentiometer. M1 gets its bias voltage through R4. Depending on the setting of P1, the 4040 counter will get a clock pulse when a certain noise level (threshold) is exceeded. The counter state determines the configuration of the four electronic switches inside the 4066 and so the series resistance effectively seen in the audio signal line.

The circuit should be powered from a 9-V regulated supply or a battery and will consume a few milliamps only.

Switch S1 allows the counter to be reset, switching all 4066 switches to off, i.e., the highest attenuation will exist in the audio path as in that case none of the 1-kΩ resistors are shorted out.

To calibrate the circuit, disconnect the 4040 clock input (pin 10) from the wiper of P1, and temporarily ground it through a 100 kΩ resistor.

Now pulse the clock input by briefly connecting it to the +9 V line; you will see the counter outputs change state and with them, the bilateral switches in the 4066.

(070034-I)

289 CO Sensor

SENSORS

The Figaro TGS5042 sensor is a carbon monoxide sensor that is used primarily in industrial applications such as smoke detectors, fire detection equipment and ventilation controllers for indoor car parks and the like. The sensor is quite suitable for use in battery-powered applications, and it has several advantages over conventional sensors. The electrolyte is environmentally friendly, and the housing is leak-proof. The sensor can measure CO concentration up to 1%, and it has a temperature range of –40 °C to +70 °C. The housing has the same form as an AA battery.

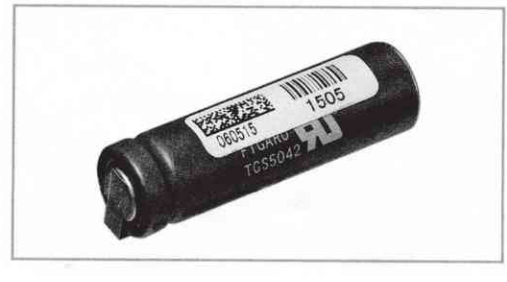

A few specifications:

- Suitable for use in battery-powered equipment

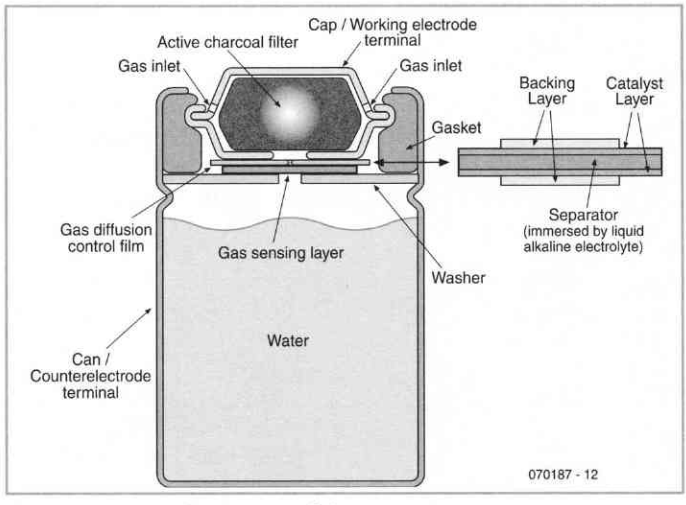

Figure 1 *Internal structure of the sensor.*

Figure 1 shows the internal structure of the TGS5042 sensor. The gas-sensitive layer for CO is located between a stainless-steel ring (counter electrode) and a nickel-plated cap (working electrode). The cap is packed in a sort of film and several supporting layers. All of this is packaged in a cylindrical stainless-steel housing. The lower compartment is filled with water, and the cap end is filled with an activated charcoal filter.

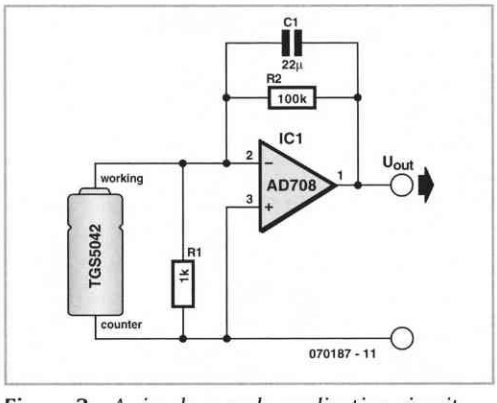

Figure 2 *A simple sample application circuit.*

Figure 2 shows the schematic diagram of a basic application circuit for the TGS5042. The sensor generates an extremely small current, which is converted into a voltage by an instrumentation amplifier formed by IC1 and R2. Resistor R1 is necessary to prevent polarisation of the sensor, which might otherwise occur when the circuit is switched off.

It is essential to avoid applying a voltage to the sensor under any conditions. Doing so would permanently damage the sensor. The voltage across the sensor must always be less than 10 mV.

- High sensitivity and accuracy for CO
- Linear relationship between CO concentration and output voltage
- Low sensitivity to ethanol
- Low sensitivity to other gasses that may be present

Some potential applications for the sensor are:

- Residential CO detectors
- CO monitors for industrial applications
- Ventilation control for indoor car parks

(070187-I)

290 PIC12C508 Stepper Motor Controller

ACTUATORS

C. Tavernier

When we're not using a stepper motor to ensure precise positioning of a robot element, it can be used as a traction motor, in place of the standard modified servos presented

elsewhere in this book. Under these conditions, there's no longer any need to 'count the steps' the motor has to make, as all we want is to make it rotate continuously in one direction or the other.

Several solutions are open to us for driving the motor, a number of which are presented in this issue: using a specialized stepper motor driver IC, using one or more suitably-programmed microcontroller parallel ports, or building a driver based around conventional logic ICs.

However, these solutions are far from satisfactory when using a stepper motor for traction. They all require pulses to be generated continuously for as long as we want the motor to run, either requiring an additional programmable oscillator, or using up resources from the robot's main microcontroller.

So we've decided to suggest another approach with this stepper motor driver specifically designed for making the motor turn in one direction or another, under the control of a simple logic level.
And as the propulsion motors in robots usually go in pairs, we're even going to offer a dual driver, by diverting a very common and inexpensive IC from its original function.

Since a stepper motor used for propulsion doesn't need to be accurate in terms of positioning, and hence, in the precision of the steps, simple single-pole models are eminently suitable. So, our circuit is designed for motors of this type.

This lets us control the motor via two TTL- or CMOS-compatible logic inputs. When these two inputs, labelled L and R, are logic high or floating (they have their own pullup resistors), the motor stays still, but in braked mode, since it's a stepper motor. When the L input is taken to logic low, the motor rotates in one direction (arbitrarily, to the left, whence the label L) while if the R input is taken low, it turns the other way. If both inputs are taken to ground at the same time,

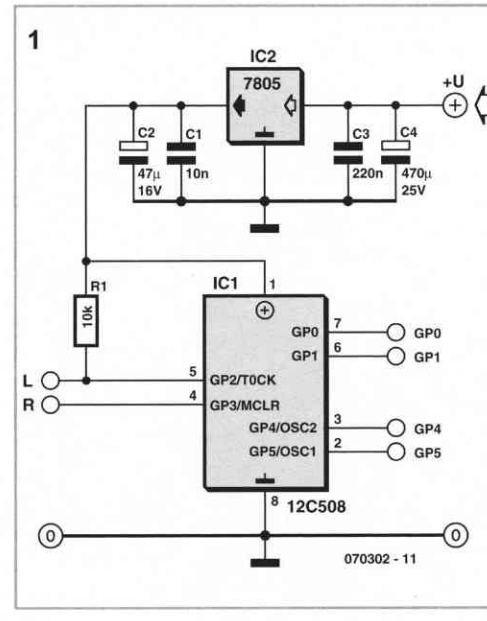

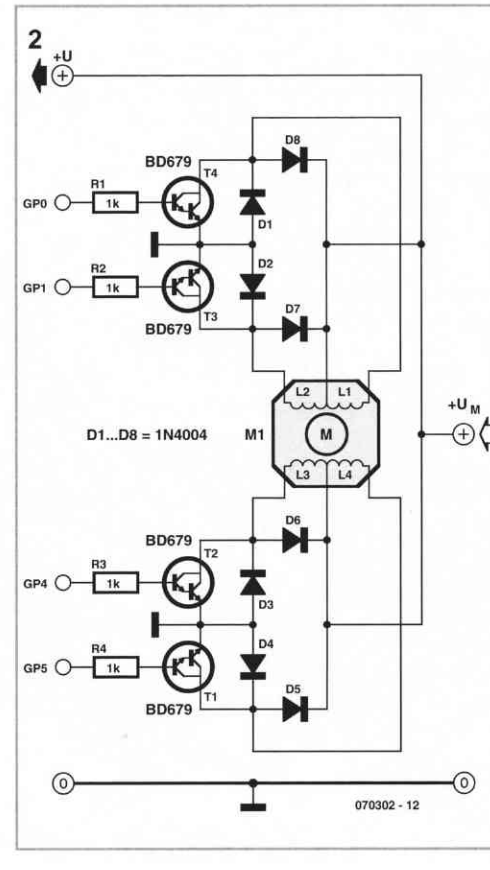

the R input has priority, and so the motor turns in that direction.

The motor's speed of rotation is fixed, but, since we are giving you the source listing of the software used for this application, it's very easy for you to modify this if it doesn't suit you, or indeed even to include the possibility of external adjustment if necessary.
The circuit of the 'intelligent' part of our controller is shown in **Figure 1**, as you can see it uses a PIC12C508 microcontroller from Microchip. Used here in internal clock and reset circuit mode, it needs no external components for these functions, so all its port lines are available.
Parallel ports GP2 and GP3 are used as inputs, and as GP2 does not have an internal pull-up resistor, this is performed by R1. Parallel ports GP0, GP1, GP4, and GP5 are used as outputs for generating the pulses for the motor windings. These can be amplified by two types of power stages, depending on the type and number of motors to be driven; we'll take a look at those circuits in a moment.

The 12C508 needs to be powered from 5 V, derived from the motor supply by means of a conventional 3-terminal voltage regulator IC2.

If the controller is only intended for a single motor, or if the motor to be driven draws more than 500 mA per winding, the power stage shown in **Figure 2** can be used. It employs conventional bipolar transistors that, given their characteristics, are able to switch currents of 3 A. Diodes D1–D8 clip the spurious spikes generated by the abrupt switching of the current in the motor windings and protect the transistors.

However, if the motor used draws less than 500 mA, and more importantly, if you need to drive two motors of this type, an elegant and ingenious solution exists, as shown in **Figure 3**.
This uses a standard ULN2803, usually used to drive relays, but which includes eight medium-power Darlingtons along with their protection diodes. So, this IC is able to properly drive any kind of single-pole stepper motor, as long as the voltage required doesn't exceed 50 V and the current per winding is under 500 mA.
In addition, as the ULN2803 contains eight identical stages, it can be preceded by two controllers like the one in Figure 1 and in this

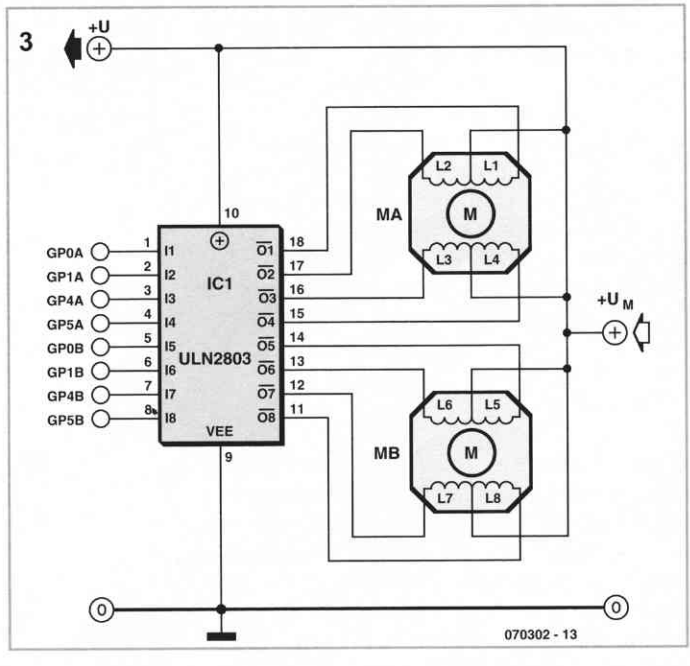

Table 1: Programming step duration by modifying a constant used in the program

Binary Step constant	Step Duration
10010010	1 ms
10010011	2 ms
10010100	4 ms
10010101	8 ms
10010110	16 ms
10010111	32 ms

way drive two robot propulsion motors: one on the left and one on the right, marked MA and MB in this figure.

Constructing one or other of these versions is very straightforward. The PIC 12C508 needs to be programmed with the file that you'll find in object form, as well as in source form, in case you'd like to modify it, on the Elektor website, as well as on the author's own site.
If you build the transistor power amplifier, note that T1–T4 don't need a heatsink as long as the motor consumption doesn't exceed 1 A. Otherwise, bolt them onto a small aluminium plate a few cm^2. To simplify mechanical construction, it can be common to the four transistors, but in this case you'll need to use the standard insulating accessories of mica washers and shouldered washers, as the collectors of these transistors are connected to the metal parts of their cases.

If you construct the ULN2803-based version, there are no special precautions to be observed, other than to not exceed the IC's maximum current capacity of 500 mA.

As we are providing you with the full source listing of the software programmed into the 12C508, you'll be able to modify it to suit your needs. If you are unfamiliar with PIC microcontroller assembler, here are the details you'll need for the most important modification you might want to make: changing the speed of the control pulses to the motors, and thus, their speed of rotation. The control word may be found in **Table 1**.
To do this, all you have to do is modify the binary constant on the line:

```
MOVLW B'10010101'
```

just above the line containing OPTION in the source listing. With the original value, the duration of one step is 8 ms, but the table above indicates what constant to use according to the step duration that you may want.

www.tavernier-c.com (070302-I)

291 Simple D/A Converter for Robots

SENSORS

Tilo Gockel

Sometimes it's necessary to add a D/A converter to a microcontroller for a specific application. This can be fairly simply accomplished by interfacing an off-the-shelf D/A converter to the microcontroller's bus. An even simpler and more cost-effective solution based on an application note from Microchip [1] is shown here.

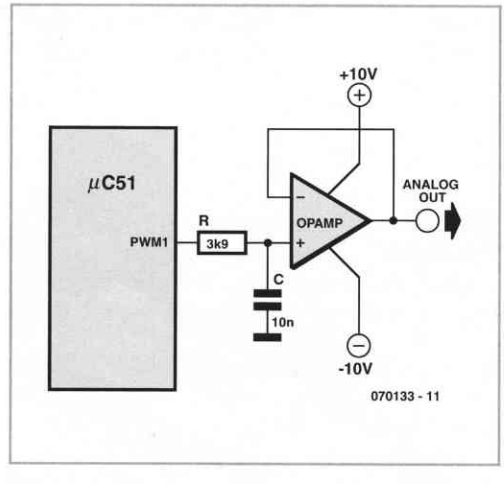

A microcontroller produces a PWM (pulse width modulated) digital output signal which is filtered by a low-pass RC filter. Although the PWM signal has a fixed repetition rate the on-to-off ratio is varied from 0 to 100 % which, after filtering gives an analogue output signal proportional to the ratio. A single digital output from a port pin (driven from an on-chip timer for example) can therefore form the basis of an analogue output signal.

Guidelines to calculate values for the RC low-pass filter are given in the application note. Using the values suggested (3.9 kΩ and 10 nF) gives a –3 dB corner frequency of around 4 kHz. When driven by a PWM frequency of approximately 20 kHz the filter will be suitable for outputting audio tones and voice signals with a bandwidth of 4 kHz. This simple filter will attenuate the 20 kHz fundamental PWM frequency by 14 dB which may not sound like much but the human ear has its own high frequency roll-off (the characteristics of which change as we age) so frequencies this high will be barely audible.

Any standard operational amplifier, for example the TL071 can be used in this application. Lower frequency signals all the way down to DC can also be handled by this circuit and in this case the low-pass filter corner frequency can be reduced further which will give better attenuation of the PWM fundamental and reduce ripple on DC output signals.
One typical application of the circuit is speed control of a DC motor in accordance with the industry standard ±10V. The circuit will connect to the motor via a suitable power driver stage. In this case the electromechanical properties of the motor itself will act as a low pass filter.

(070133-I)

Web Link
[1] *http://ww1.microchip.com/downloads/en/AppNotes/00538c.pdf*

292 Positioning with Photodiode Arrays

SENSORS

Pascal Choquet

Industrial production-line robots require high-resolution sensors to measure the position of robotic actuators so that the tools can be accurately guided onto the work piece. A photo diode array together with an external light source is often used as a sensor in this application. This chip contains a line of photo diodes together with a series of sample and hold (S/H) circuits which take a snapshot of the readings of each photo diodes at the same instant and then outputs these integrated analogue values serially from a single output.
The S/ H circuits are important because the sensitivity of each element to the light quanta is dependent on the integration period; without the S/H the last element would show the highest sensitivity.
The accompanying table lists the most important properties of some common arrays. The sensitivity is dependant on the active diode surface area and the integration time.

From the outside these arrays look very simple, apart from the two supply connections there are only three signals for connection to a microcontroller: A clock input (CLK), a start impulse (SI) input and an analogue output signal (AO). AO should be loaded with a 330 Ω resistor to ground. To readout the array values the controller firstly generates the clock signal and then sets SI high (with sufficient set-up time) before a rising clock

Table: Phottodiode Array properties

Array	MLX90255	TLS1301	TLS1401	TLS208R
Pixel (* see text):	128 (+ 4*)	102	128	512
Pitch (DPI):	385	300	400	200
Weighting:	cosinus	hetzelfde	hetzelfde	hetzelfde
Length x width (µm):	200 x 66	85 x 77	63,5 x 55,5	120 x 70
Output (V):	0,125...2,4	0...2,0	0...2,0	0...2,0

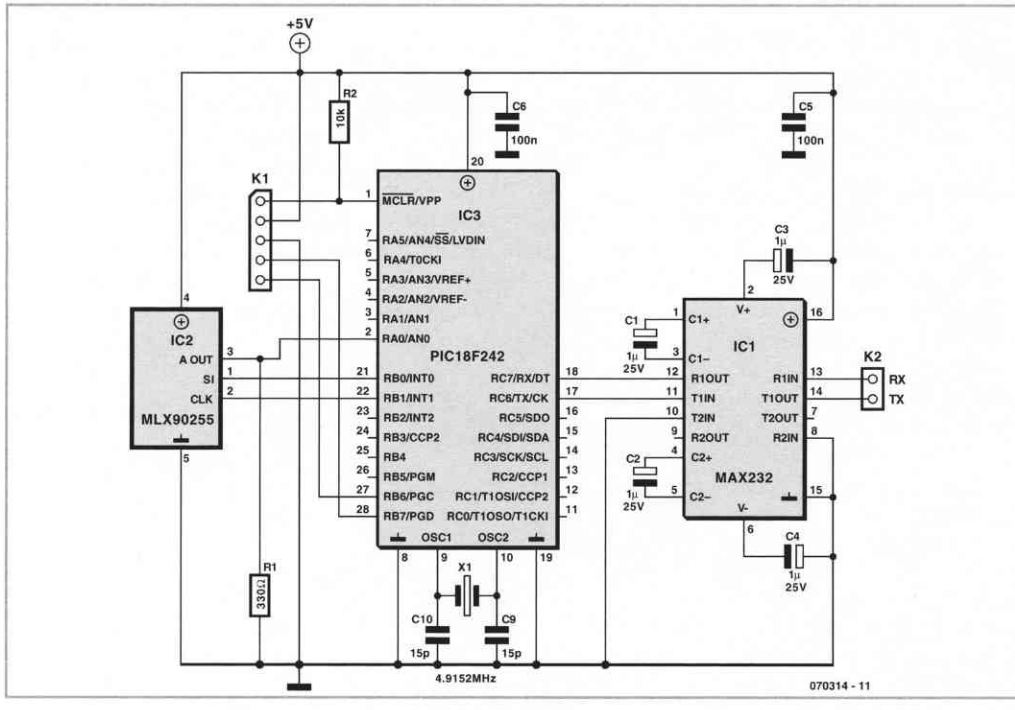

edge. On successive falling clock edges the value of each individual pixel will be output at AO. The microcontroller reads each level and stores its value.

A feature of the MLX90255 type array is that the first two values read out are dummies, the first of the 128 real values appears at the third clock edge. The two values after the 128th value are also dummies, the read out therefore requires 132 clock edges in total to read all the data and the final 133rd edge reinitialises the shift register. The gain of the pixels at either end of the array is about 15 % greater than those in the centre (cosine weighting) this compensates for the light loss experienced at the edges when the array illumination is provided by a single LED.

The integration period begins at the 18th clock edge and continues until the next SI signal. The output values are the result of the previous integration period so if the array is not continuously scanned then it is necessary to make two complete scans to get meaningful results. The first scan cycle after power up is used to initialise digital levels on the chip, the values read are invalid and should be discarded. The integration time is equal to the pixel count minus 18 divided by the clock frequency. The sensitivity can be easily controlled by the microcontroller.

The circuit diagram shown here consists of the photodiode array together with a basic PIC microcontroller and a driver chip for an RS232 serial interface connection. The author has produced a program written in C which can be used in the controller. The source files (070314-11.zip) are available to download free of charge from the Elektor website. A scan cycle is initiated using a terminal program by entering 'Strg S'. The values are separated with semicolons so they can be easily used in an Excel table.

Photodiode arrays can be used in robotics for imaging based on the pinhole camera principle, they have also been used in line-following applications where they offer good resolution and can be mounted relatively far away from the floor. Together with a prism or optical grating the array can be used to perform simple yet precise colour recognition.

(070314-I)

293 USB Converter

Jörg Schnyder

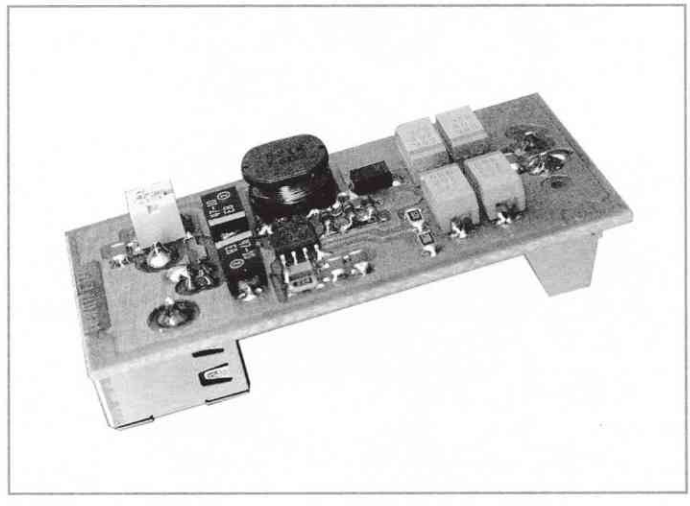

Does this sound familiar: you buy a small piece of equipment, such as a programming & debugging interface for a microcontroller, and you have to use a clunky AC wall adapter to supply it with power?

It's even worse when you're travelling and there's no mains socket anywhere in sight. Of course, you can use the USB bus directly as a power source if the supply voltage is 5 V. If you need a higher voltage, you can use the USB converter described here. This small switch-mode step-up converter can generate an output voltage of up to 15 V with a maximum output current of 150 mA.

The LM3578 is a general-purpose switch-mode voltage converter. **Figure 1** shows its internal block diagram. Here we use it as a step-up converter. The circuit diagram in **Figure 2** shows the necessary components. Voltage conversion is achieved by switching on the internal transistor until it is switched off by the comparator or the current-limiting circuit. The collector current flows through coil L1, which stores energy in the form of a magnetic field.

When the internal transistor is switched off, the current continues flowing through L1 to the load via diode D1. However, the voltage across the coil reverses when this happens, so it is added to the input voltage. The resulting output voltage thus consists of the sum of the input voltage and the induced voltage across the coil. The output voltage depends on the load current and the duty cycle of the internal transistor. Voltage divider R5/R6 feeds back a portion of the output voltage to the comparator in the IC in order to regulate the output voltage. C5 determines the clock frequency, which is approximately 55 kHz.

Network R4, C2 and C3 provides loop compensation. The current-sense resistor for the

1

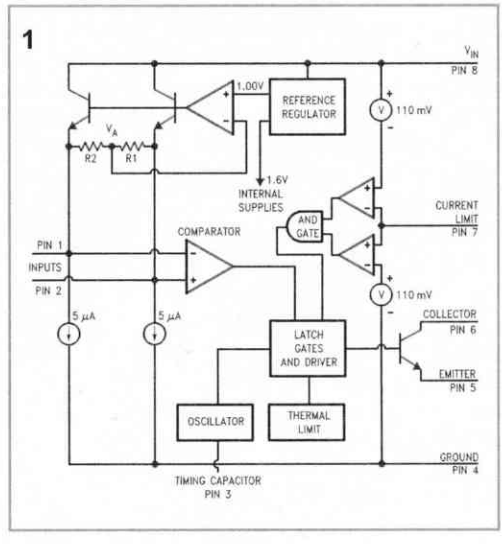

2

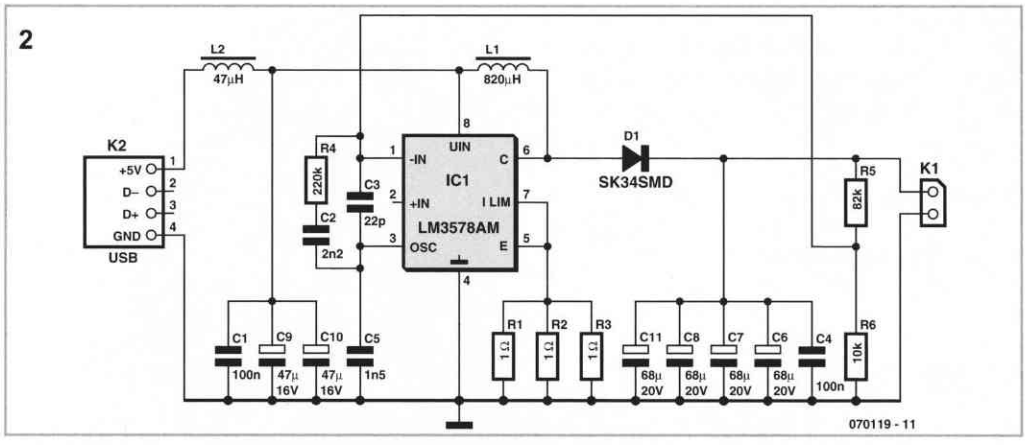

current-limiting circuit is formed by three 1-Ω resistors in parallel (R1, R2 and R3), since SMD resistors with values less than 1 Ω are hard to find. The output voltage ripple is determined by the values and internal resistances of capacitors C11, C8, C7 and C6.

The total effective resistance is reduced by using several capacitors, and this also keeps the construction height of the board low. L2, C1, C9 and C10 act as an input filter. Ensure that the DC resistance of coil L2 is no more than 0.5 Ω. Use a Type B PCB-mount USB connector for connection to the USB bus.

A terminal strip with a pitch of 5.08 mm can be used for the output voltage connector. Of course, you can also solder a cable directly to the board. Two additional holes are provided in the circuit board for this purpose.

As we haven't been able to invent a device that produces more energy than it consumes, you should bear in mind that the input current of the circuit is higher than the output current.

As a general rule, you can assume that the input cur-

R5 and R6 for other output voltages	
6 V	R5 = 47 k, R6 = 9,1 k
12 V	R5 = 110 k, R6 = 10 k
15 V	R5 = 130 k, R6 = 9,1 k

3

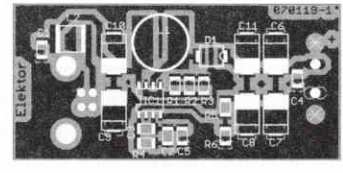

75%

COMPONENTS LIST
(for U_B = 9 V)

Resistors
(SMD 1206)
R1, R2, R3 = 1 Ω
R4 = 220 kΩ
R5 = 82 kΩ
R6 = 10 kΩ

Capacitors
(SMD 1206)
C1 = 100 nF
C2 = 2nF2
C3 = 22 pF
C4 = 100 nF
C5 = 1nF5
(tantalum SMD 7343)
C6...C8, C11 = 68 µF 20V
C9, C10 = 47 µF 16V
C10 = 47 µF 16V

Inductors
L1 = 820 µH *(SMD CD105)*
L2 = 47 µH *(SMD 2220)*

Semiconductors
D1 = SK34SMD (Schottky)
IC1 = LM3578AM *(SMD SO8)*

Miscellaneous
K1 = 2-way PCB terminal block, lead pitch 5mm (optional)
K2 = USB-B connector
PCB layout, free download from Elektor website, 070119-1.pdf

rent is equal to the product of the output current and the output voltage divided by the input voltage and divided again by 0.8. Specifically, with an output current of 100 mA at 9 V, the input current on the USB bus is approximately 225 mA.
Finally, **Figure 3** shows a small PCB layout for the circuit. All of the components except the connector and the terminal strip are SMDs.

(070119-I)

Web Link
Author's homepage:
www.systech-gmbh.ch

294 Optimised STK200/300 Programmer

MICROCONTROLLERS

for AVR Micros

Hesam Moshiri

The STK200/300 programmer is found in nearly every programmer software for Atmel AVR microcontrollers. The programmer shown here differs from other, similar, circuits in not requiring any extra power supply for itself, while still offering STK200 as well as STK300 programmer functionality.

In case you did not know, AVR microcontrollers can be programmed in-circuit with only five wires: Clock, MOSI, MISO, Reset and Ground. To these should be added the +5 V supply voltage taken from the microcontroller on the target board.

The programmer schematic contains nothing more than one buffer IC type 74HC244, one 25-pin male sub-D connector for hooking up to the parallel printer port ('Centronics') on the PC, a 100 kΩ pull-up resistor on the MISO line and a .1 µF decoupling capacitor on the +5 V supply rail.
With some tinkering, the complete circuit can be fitted in the sub-D connector housing. A short length of flatcable and a 6-way IDC socket at the target board side complete the programmer. After programming, you simply disconnect the programmer cable from the target board.

The STK200 or STK300 programmer hardware is available in lots of microcontroller programmer software, for example, BASCOM and CodeVision.

(060374-I)

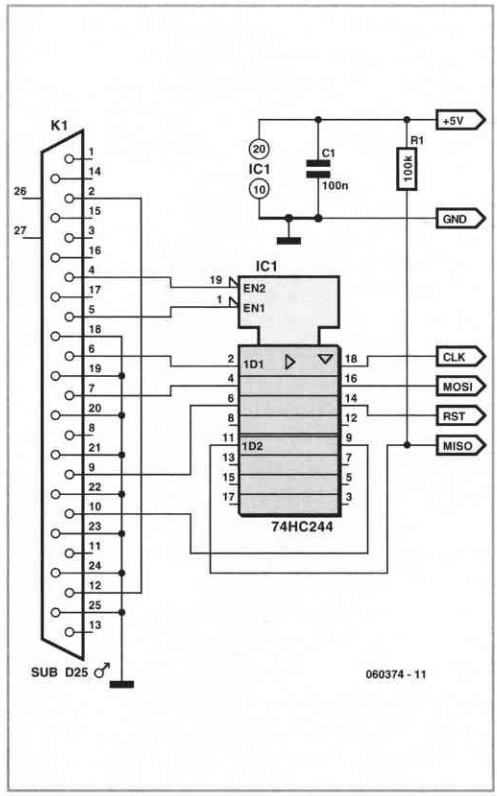

295 zBot: Solar/Battery Power Supply

Jens Altenburg

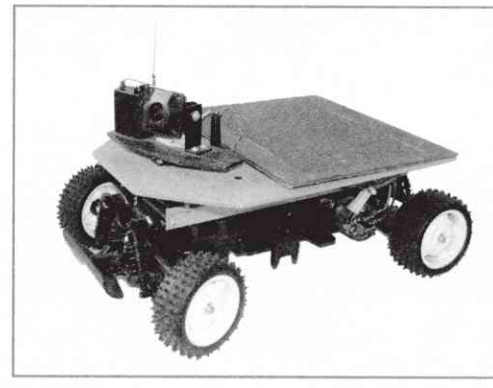

One of the most important problems of mobile robot platforms is associated with the power supply. With exception of some special systems, batteries, dry or rechargeable, are the most commonly seen sources of electrical power in robots.

The power supply system of zBot [1] consists of two parts, the main accumulator and the auxiliary battery. The main power source was realised with a NiCd or NiMH battery pack. Its size was adapted to fit the battery holder of the Tamya chassis (six 1.2V/1400 mAh C cells). The main power is activated for DC motor driving and for the servos.
The auxiliary system, two Alkaline AAA batteries, is for the power supply of the microcontroller only.
A third (optional) power source is the solar panel. It is not really necessary for initial experiments but it helps to keep the robot autonomous longer.

The circuit of zBot's main power supply system includes a special feature: the charge control circuit based around a MAX472. For effective operation, we have to know the exact capacity of the battery. Imagining the rechargedischarge voltage diagram, we know that the voltage is virtually stable for most of the discharge time and suddenly breaks down when the battery runs out of capacity. This time is very short, so it could happen that the robot could be lost.

A simple voltage control doesn't give us the information we need. The only way to obtain exact values is monitoring the discharging. The MAX472 gives two values, the current

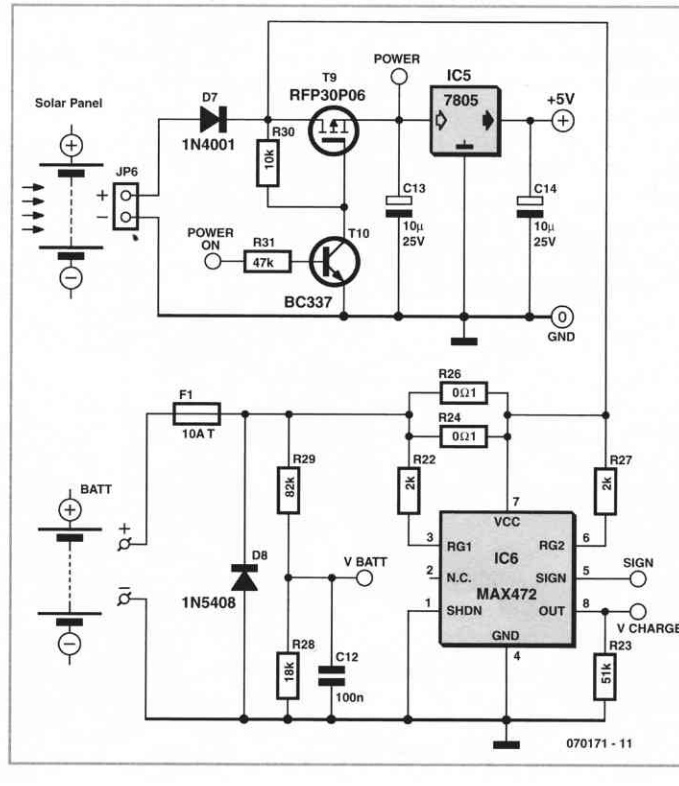

through R24//R26 as a proportional voltage at pin 8, and the current direction through the resistors (SIGN). Both values allow calculation of the charging (solar panel) or discharging of the battery pack.
The auxilliary power is shown in the CPU unit. The two alkaline batteries support the CPU, the wireless radio modem and the navigation system (compass) only.

The reason for the division of the power supply is simple. With the help of the auxiliary system, zBot communicates with the operator wirelessly. In this way, the independent power source increases the security of the system.

(070171-I)

[1] The complete document called Zbot – the Robot Experimental Platform is available for free downloading from the Elektor website. The file number is 070172-11.zip (July/August 2007).

296 IR Telemeter

SENSORS

with a PIC or a Basic Stamp

C. Tavernier

Although the simplest robots may be content to simply detecting obstacles, many robots that require precision in their positioning need to be able to measure distances accurately. To achieve this, it is necessary to use a telemeter, which can be infrared or ultrasonic. IR is very suitable for measuring short distances (a few centimetres up to a few tens of centimetres), while ultrasound is more suitable for distances from a few tens of centimetres to several metres.

Although it is still possible to construct a telemeter using standard resources, these days it's not really worthwhile because of the availability of ready-to-use integrated modules that are all relatively accurate, cheap, and compact. Taking a look at IR telemeters, the Sharp range is currently the largest and most readily available, insofar as we wish to stick with products at prices compatible with an 'amateur' robot.

This range, whose part numbers all begin with GP2..., includes telemeters that provide on/off outputs (though these aren't really telemeters as such!), information in analogue form, and information in digital form. Though the versions providing analogue information would appear to be the easiest to use, it's absurd to use them in a robot driven by a microcontroller, which will immediately con-

1

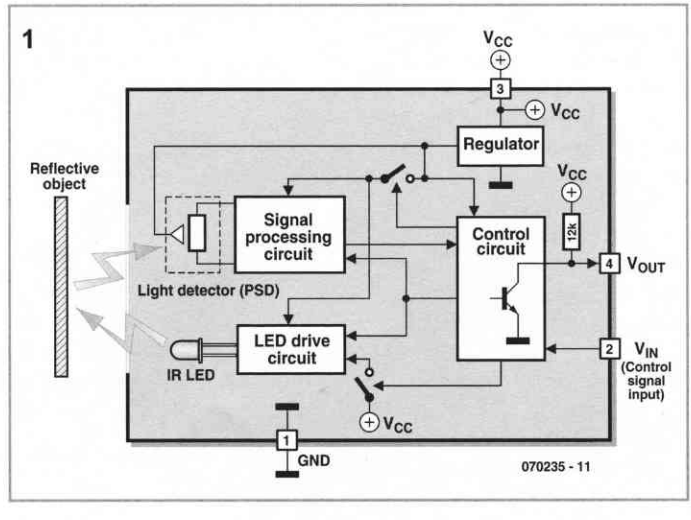

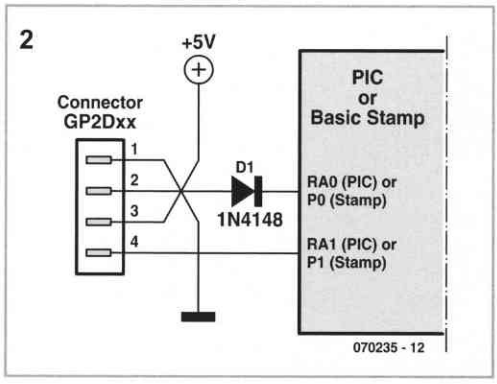

vert this analogue voltage into a digital signal via its built-in converter so as to be able to make use of it. So it is better to have digital information available right from the outset, even if it might seem a little harder to read at the telemeter output.

In these circumstances, two types are currently readily available: the GP2D02, capable of measuring from 10 cm to 80 cm approximately, and the GP2D021, capable of measuring from 4 to 30 cm approximately. These two types are fully compatible both mechanically and electrically, and so everything we are about to write is equally applicable to both of them.

The principle of an IR telemeter is relatively simple: an LED emits an IR beam that, if it encounters an object, is reflected back towards a photodiode. Left at that, such a system is an on/off type and is really more an obstacle detector than a true telemeter. Although certain of the Sharp telemeters do work along these lines, the two types we've chosen are capable of performing true distance measurement, as the rays reflected by the object are no longer picked up by just a simple photodiode, but by a CCD array.

As a result, the angle of incidence of the reflected beam reaching this array varies according to how far away the detected object is, and hence allows true distance measurement, provided there is a minimal amount of signal processing to exploit the information generated by the CCD sensor.

This is the case in the Sharp telemeters of this type, the internal block diagram of which is shown in **Figure 1.** In those telemeters with a measurement validation input (as in the models chosen), the LED is only powered under its control, allowing a very significant reduction in quiescent power consumption. In the other telemeters, it's on all the time.

The CCD sensor is followed by a signal processing circuit that allows an output to be generated as either an on/off type signal for the simplest telemeters, an analogue signal, or lastly, 8-bit digital information, as in the models that interest us.

So as to be compatible with a maximum number of robotics solutions, we've opted to show you how to use such a telemeter with either a Basic Stamp or a PIC microcontroller programmed in Basic or machine code.

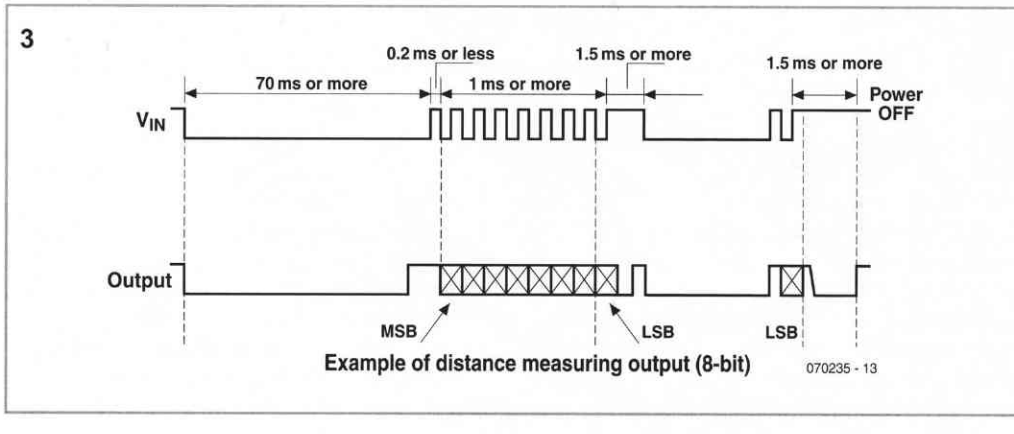

Listing 1: use of GP2Dxx with a Basic Stamp

```
Vin         con     0           ' Definition of control input
Vout        con     1           ' Definition of data output
Measr       var     Byte        ' Allocation of one byte for the result

Measr = 0                       ' Initialization of variable « Measr »
Read :
Vin = 0                         ' Validation of telemeter
Wait :
IF Vout = 0 THEN Wait           ' Wait until result is available
SHIFTIN Vout, Vin, 2, [Measr]
Vin = 1                         ' Put telemeter to sleep
Pause = 1                       ' Pause in case of

' The result of the measurement is available in the variable 'Measr'
```

Listing 2: use of GP2Dxx with a PIC controller

```
Read
BCF       PortA.0               ' Validation of telemeter
NOP
Wait
BTFSS     PortA,1               ' Wait until result is available
GOTO      Wait
BSF       PortA,0               ' Vin goes High
CLRF      Measr                 ' Initialization of the variable « Measr »
MOVLW     8                     ' Get ready to read 8 bits
MOVWF     Count
BCF       Status,C              ' Zero the carry
NOP
Readbit
BCF       Porta.0               ' Make clock Low
NOP
NOP
RLF       Measr,f               ' Rotation of preceding bit
BTFSC     PortA.1               ' Read data bit
BSF       Measr,0
BSF       PortA.0               ' Make clock High
NOP
NOP
          DECFSZ Count,f        ' Count down number of bits to read
GOTO      Readbit

' The result of the measure is available in the variable 'Measr'
```

The telemeter application circuit can be summed up as shown in **Figure 2**, whether it's with a PIC or a Basic Stamp. The GP2D02 or GP2D021 detector is powered all the time, but because it has a control input, it consumes virtually nothing when there is no measuring taking place.

A glance at the timing diagram in **Figure 3** shows us that this input is used not just for validating the measurement, but also as a clock for transferring the reading to the V_{out} terminal. Hence it needs to be controlled by the associated microcontroller, but as it must not be subjected to a voltage above 3 V, diode

D1 isolates it from the microcontroller output when the latter is high.
The timing diagram in Figure 3 should enable you to easily follow the listings of the very short programs we've written for using this sensor, whether in Basic, for the Basic Stamp and PICs programmed in Basic, or in PIC assembler, for those of you who prefer machine code.
As far as the Basic Stamp is concerned, just the instruction SHIFTIN is all it takes to read the result of the sensor's measurement. For the PIC, there will obviously need to be a few more instructions to generate the read clock and recover the relevant data. In both cases, these programs provide the digital data returned by the telemeter following the measurement in the variable 'Measr'. Then it's up to your robot's management program to use this value directly, or to linearise it using a conversion table, if you want to perform actual distance measurement.

4

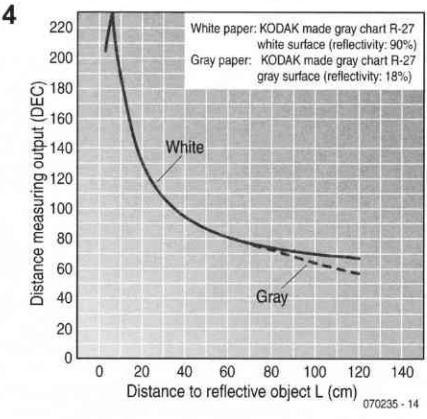

In fact – and this is perhaps the sole shortcoming of these telemeters – the information they provide is far from linear, as shown in **Figure 4**.

www.tavernier-c.com (070235-I)

297 Driving Higher Power DC Motors

ACTUATORS

B. Broussas

Driving the 'small' motors that may be used in robotics doesn't usually pose much of a problem. Servo motors actually have their own drive electronics, stepper motors can be easily driven by conventional power transistors or by ULN2803 ICs as has been shown elsewhere in this issue, as they rarely draw more than a few hundreds of mA. For small DC motors, simple transistors will suffice, unless you prefer for example the LB1630 from Sanyo, though limited alas to a current of 400 mA and a voltage of 6 V.
On the other hand, as soon as the motor starts drawing 1 A or more, or its supply voltage exceeds 20 V or so, the situation gets more complicated – all the more so because many of you don't much care for power electronics. So, this article hopes to give you a few ideas or research paths for driving such

1

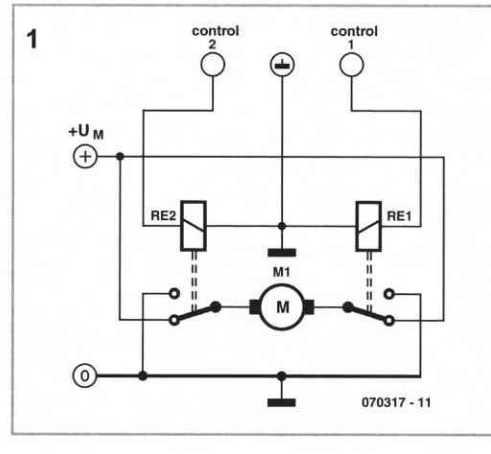

motors.
The first method for controlling a higher-power DC motor is none other than the good old relay, or to be precise, pair of relays. As long as you wire them as shown in **Figure 1**,

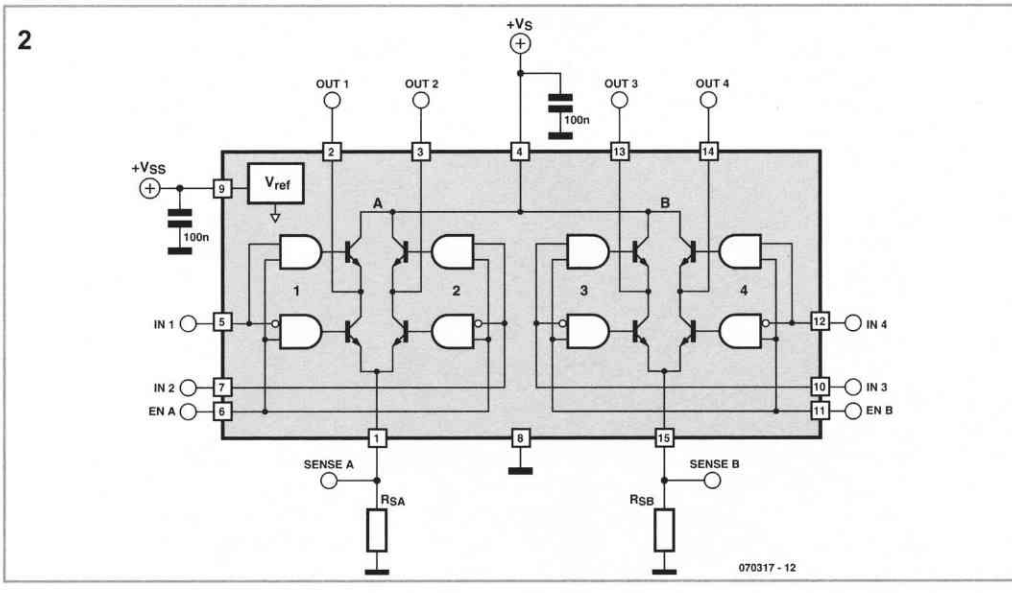

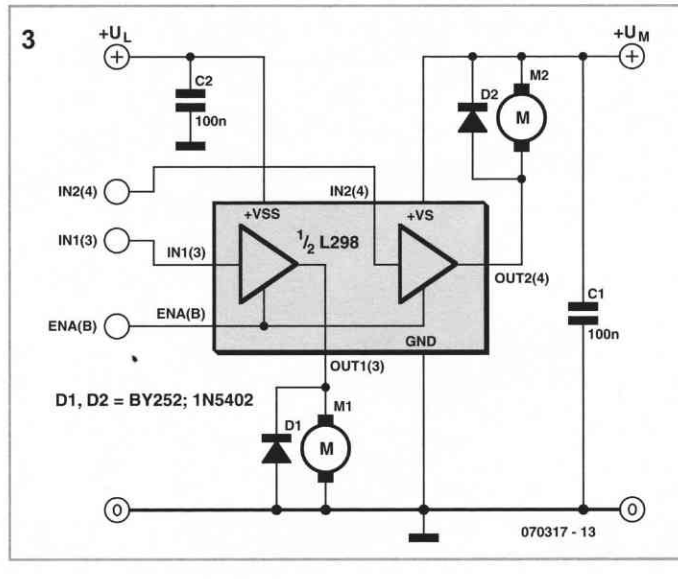

you have control over the operating direction, depending on which relay is engaged and which is not, as well as a stop control that acts as a very effective electrical brake, when both relays are in the same position. In this situation, the motor is short-circuited and is braked by its own back emf (electromotive force).

Relays capable of switching 10 A and yet only requiring 5 V and a few tens of mA for their coils are commonplace nowadays (see for example the Finder relays) and so can be used in this way without difficulty. If you don't like this electromechanical solution, we recommend you to use the bridge power IC, one worthy representative of which is the L298 from ST Microelectronics. As its internal block diagram shows (**Figure 2**), this IC includes four bridge power amplifiers, preceded by logic control circuitry.

Originally designed for driving 'big' stepper motors, this IC is suitable for a host of other applications, of which here are a few examples.

By virtue of the relative independence of the amplifiers it contains, it can be used to drive four motors, as long as you are content with a single direction of rotation. It is then possible to take one of these motor connections to earth or to the supply rail, as indicated in **Figure 3**. By juggling with the combinations of logic levels on the control and enable

Table 1				
EnA(B)	In1(3)	In2(4)	M1	M2
H	H	H	Braked	Running
H	L	L	Running	Braked
L	X	X	Freewheel stop	Freewheel stop

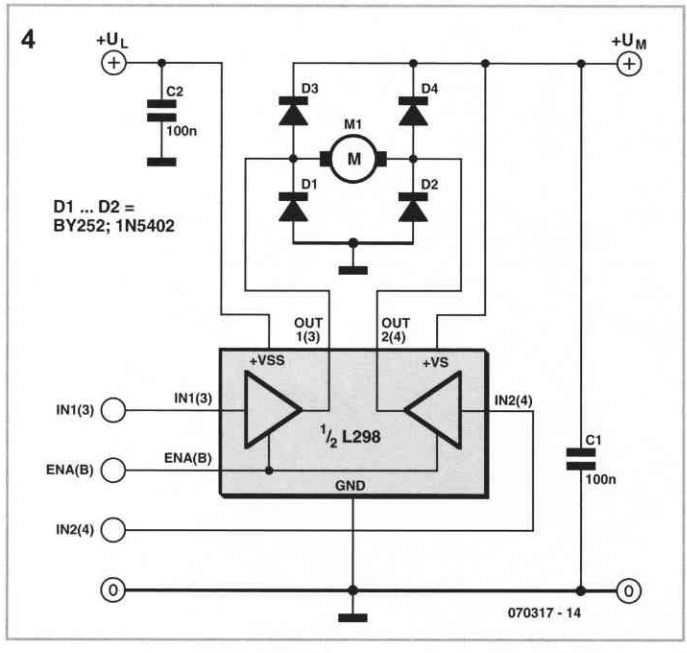

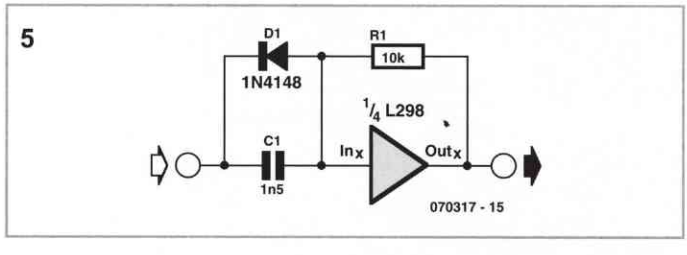

motors of a mobile robot. Although the circuit does have protection against overheating, be aware that you can increase its operating safety by monitoring the current drawn by the motors. To do this, all that you have to do is to fit a very low value resistor between the SENSE A or SENSE B inputs and earth. All the current drawn by the motor connected to the corresponding amplifier will then pass through this resistance, and by simply applying Ohm's law and measuring the voltage at these inputs, it is possible to monitor this current.

If you don't wish to use this monitoring, you are recommended to protect the IC against possible shorts of its outputs to earth, which are the most likely to occur in a robot (a motor terminal touching the metal chassis, for example!) In this case, STMicroelectronics recommends the circuit in **Figure 5**. This circuit trips in 10 μs and resets by itself when the short disappears.

The L298 is capable of withstanding a maximum supply voltage of 46 V and each of its power amplifiers can supply a current of 2 A, already a more than comfortable value, even for a relatively heavy mobile robot. If that isn't enough for you, it is also possible to connect the power amplifiers in parallel, as long as you go about it the right way. You then have a maximum output current of 3.5 A. To do this, you must adhere to the circuit in **Figure 6** and no other; that is to say, you must

inputs of the L298, you can even have two options for motor stopping, as indicated in the table below: the 'freewheel' or unbraked mode, or the braked mode, as seen previously with the relay circuit. **Table 1** shows the relevant logic level combinations.

If the direction of rotation of the motor has to be able to be changed, it is necessary to use a bridge or H connection, as shown in **Figure 4**. Note that it is possible to drive two motors in this way from one L298, since the IC contains four amplifiers. So, a single L298 is usually enough for the right and left propulsion

only parallel amplifiers 1 and 4 on the one hand, and 2 and 3 on the other.
Just before we reach the end of our article, do note that the L298 does not include built-in protection diodes, so it is vital to provide them externally as we have done in each of our figures, otherwise the L298 is guaranteed to be destroyed the first time the robot's wheels turn!
This IC is of course not the only one that can be used for driving higher-power DC motors for robotics applications. More recent and/or higher performance packages do currently exist. But the L298 does have the advantage of being readily available, inexpensive, and able to fulfil a wide range of needs, which to our mind more than justifies this presentation of its various modes of use. And if you are ever so slightly curious, you'll find copious application notes about it on the STMicroelectronics website (*www.st.com*), which will be a good source of additional ideas for implementing it.

(070317-I)

6

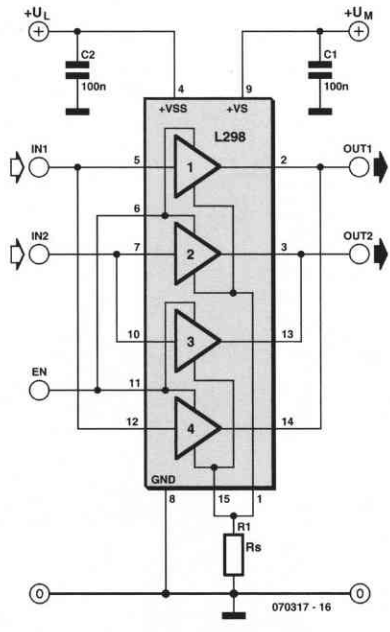

298 Sound Activated Switch

SENSORS

Hesam Hoshiri

Control by sound may be very useful, not just on a robot but also for a bit of home automation, for example a sound-activated light responding to a knock on the door or a hand clap. The light will be automatically switched off after a few seconds. An alternative use is burglar protection – if someone wants to open the door or break something the light will come on, suggesting that someone's at home.

The circuit can work from any 5–12 V_{DC} regulated power supply provided a relay with the suitable coil voltage is used.

When you first connect the supply voltage to the circuit, the relay will be energised because

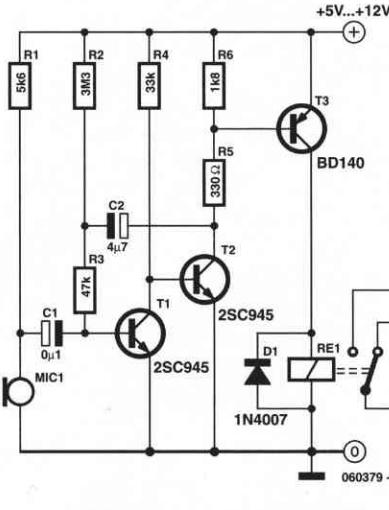

of the effect of capacitor C2. Allow a few seconds for the relay to be switched off. You can increase or decrease the 'on' period by changing the value of C2. A higher value results in a longer 'on' period, and vice versa. Do not use a value greater than 47 μF.

Biasing resistor R1 determines to a large extent the microphone sensitivity. An electret microphone usually has one internal FET inside which requires a bias voltage to operate. The optimum bias level for response to sound has to be found by trial and error.

(060379-I)

All relevant electrical safety precautions should be observed when connecting mains powered loads to the relay contacts.

299 PIR Sensor

SENSORS

Abraham Vreugdenhil

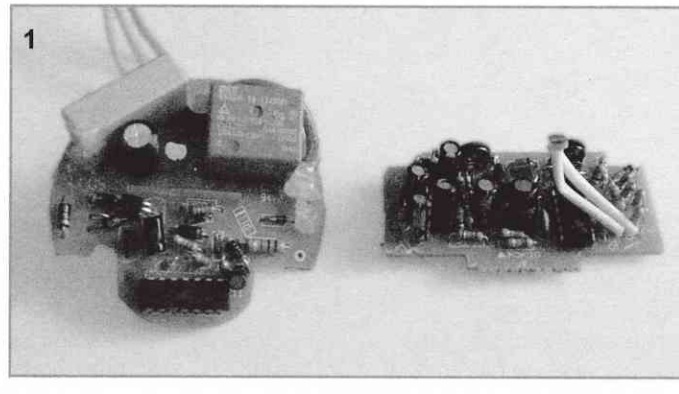

When designing a robot, a choice has to be made as to the types of sensors that it will have. This choice will be determined mostly by the purpose of the robot. But the degree of complexity required in using the sensor and the cost of the sensor also play a role, of course. Sensors that are favourable in these respects are for example bumpers and feelers with microswitches, IR distance sensors from Sharp and ultrasonic sensors. If we want to detect moving warm objects, such as people and animals, then PIR (passive infrared radiation) sensors from Eltec, in particular, become a consideration, such as the Eltec-442.
This is a very nice sensor, but the price is a problem unfortunately, more than 60 dollars. Conrad Electronics also have a PIR sensor available, the LHI958 (order number 178730) for just over £ 2.50. The disadvantage of this sensor is that an amplifier has to be added in order to obtain a usable output signal. The documentation for the sensor is not particularly clear about this.
Another solution is a sensor that we often meet in daily life: the well-known movement detector for outdoor lighting, which is available from any builder's market or hardware store for a reasonable price. These are offered for sale at less than £ 7.00. After disassembly of the sensor, the main board with its daughter board remain (**Figure 1**). The daughter board contains the PIR sensor and accompanying electronics. The connection

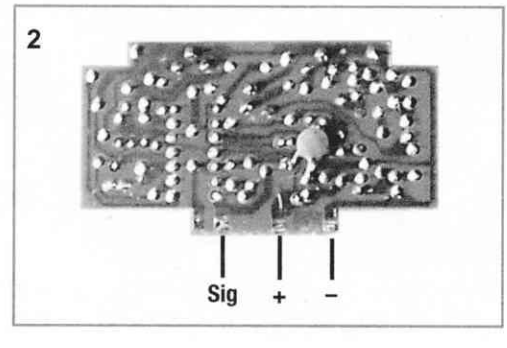

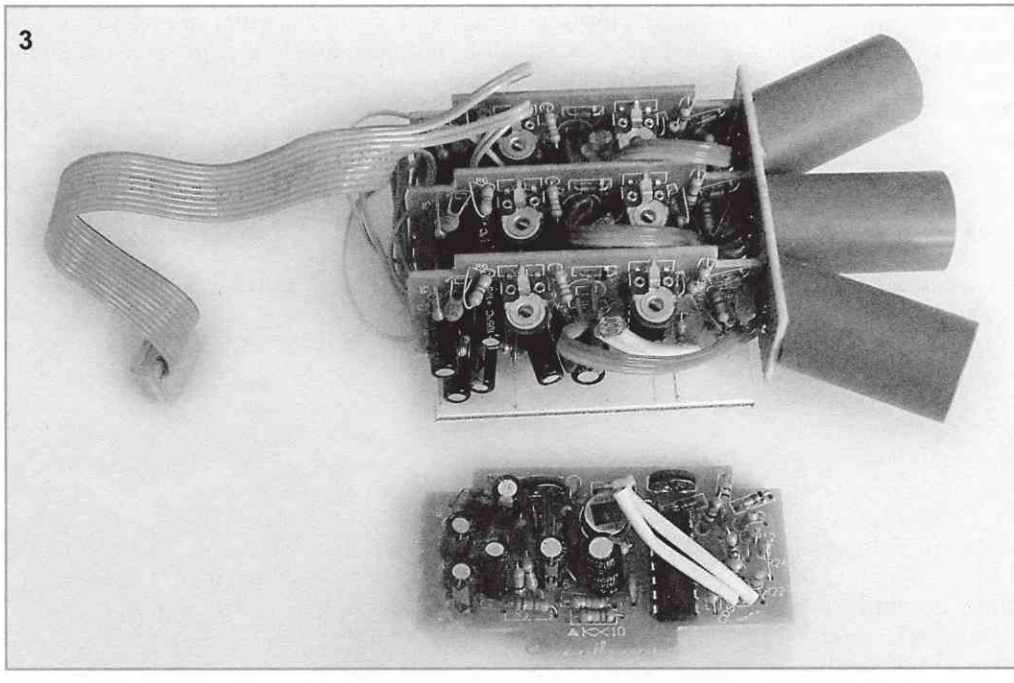

points for the power supply and output signal can be found on the back (**Figure 2**). The sensor is normally powered from 8 V, but it still works well at 5 V.

A robot will often be fitted with multiple PIR sensors that are mounted at different angles. To achieve this, we can mount three sensors on a piece of prototyping board and limit the view of each sensor with a short section of electrical conduit.
The length of the conduit determines the field of view. The sensors on their own have a field of view of 140 degrees, so the shielding is definitely required. It is advantageous if the fields of view of the sensors overlap. In this way three sensors can be used to make five detection zones. It is of course also possible to use more sensors so that a greater resolution is obtained.
In this manner it is reasonably cheap to build a nice PIR sensor unit. The one shown in the example (**Figure 3**) comprises three PIR sensors. This sensor unit is easy to build and works well.

(070189-I)

300 From Cassette Recorder to Robot Propulsion

ACTUATORS

B. Broussas

There are currently three principal methods for the propulsion of a mobile robot: the modified radio-control servo, the stepper motor, and the DC motor. All have advantages and disadvantages, which are important to be familiar with before making your choice.

The modified radio-control servo offers numerous advantages, the main one being that it offers relatively high tractive power with-

out needing a reducing gearbox, as this is already contained within the servo case. So all you have to do is mount it onto the robot and fix the wheels directly onto its shaft. What's more, a radio-control servo is powered from 4.8 V, which is particularly handy for robots using four 1.2 V rechargeable batteries.

The major drawback of the radio-control servo lies not so much in its pulse drive mode, for which various solutions are proposed elsewhere in this issue, as in the lack of precision in the behaviour of the servo with respect to the pulse width. Although theoretically the servo runs at maximum speed in one direction or the other for pulses of 1 or 2 ms and stops for pulses of 1.5 ms, experience shows that differences of 10–20% in the pulse width needed are sometimes encountered. These differences make it necessary to calibrate the propulsion control programs of robots fitted with servos on an individual basis, thereby ruling out any reproducibility from one model of robot to another.

Stepper motors do not suffer from these drawbacks, but don't usually include any built-in mechanical reduction, meaning you have to provide external reduction if you don't want to end up with too little torque. If you don't fancy building such a device yourself, it's possible to use the 'gearboxes' sold as kits by various robotics or modelling retailers, but experience shows these are usually designed for standard DC motors, and are unsuitable for comparatively bulkier stepper motors. Moreover, driving steppers obliges us to use either a specialized IC, or a collection of logic ICs in association with power transistors.

So if you are forced to fall back on external reduction, for example because you don't want to use a servo, the DC motor then becomes the natural choice, especially since certain 'gearbox' kits are sold with such motors. So, all that remains is to drive them correctly.

Although conventional transistor-based circuits are still usable, there is also one very simple solution, directly inspired by the (old)

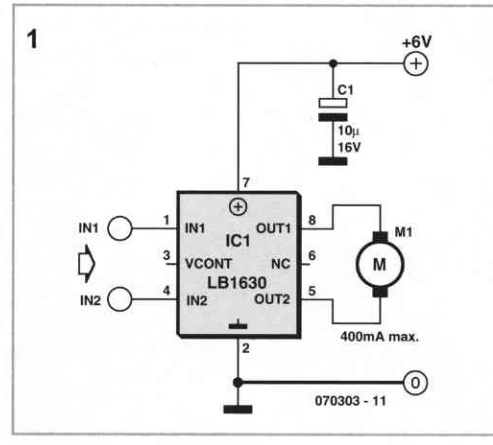

cassette recorders in which DC motors were widely used. It involves using an LB1630 IC made by Sanyo, which can be cannibalized from many cassette recorders that have been thrown out, or else bought new, from Lextronic for example (*www.lextronic.fr*).

Available in an 8-pin DIP package, the LB1630 is ridiculously simply to use, as shown in **Figure 1**. In fact, all it needs to be able to work is one external decoupling capacitor. It's controlled by two logic signals, which are TTL-compatible when the circuit is powered from a voltage of the order of 5 V. The supply must be between 2.5 and 6 V, and must not under any circumstances exceed 7 V, at risk of destroying the IC.

The current drawn by the motor being driven can be up to 400 mA maximum, though peaks up to 2 A are allowed, but only in the form of pulses whose duration may not exceed 50 ms at a duty cycle of 10%.

The protection diodes, vital when driving an electric motor using transistors, are built into the LB1630 and so don't need to be added to the circuit shown.
The two inputs IN1 and IN2 allow logic control of the motor, as per the **Table**.
Inputs IN1 and IN2 of the LB1630 just need to be in opposite states for the motor to turn one way or the other. So it's very easy to control using two parallel port lines from any microcontroller.

Truth table for LB1630 motor control IC				
IN1	**IN2**	**OUT1**	**OUT2**	**Motor**
H	L	H	L	Forward run
L	H	L	H	Reverse run
H	H	hi-Z	hi-Z	Stop
L	L	hi-Z	hi-Z	Stop

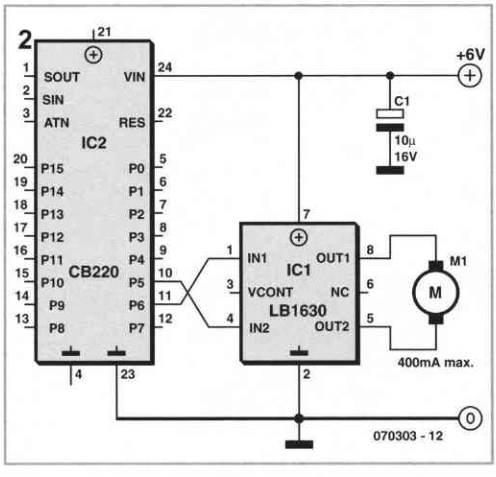

Independently of this 'on/off' type control to make the motor run in one direction or the other, the speed can also be controlled. All that is needed is to apply PWM pulses to one or the other of inputs IN1 or IN2.

Figure 2 shows one way of performing this sort of speed control using a Cubloc CB220, which has the advantage over the many other microcontrollers that can be programmed in Basic of being able to generate continuous PWM signals. With such a circuit, all you have to do is write, for example:

```
OUT 6,0
PWM 0, SPEED, 255
```

to make the motor run in one direction at a speed that can be adjusted by means of the variable SPEED, which can vary from 0–255, and:

```
OUT 6,1
PWM 0, (255-SPEED), 255
```

to make it run at the same speed but in the other direction.

Note too that, given that IN1 and IN2 of the LB1630 are logic inputs, several of them can be connected in parallel, so as to control several motors in an identical manner. But watch out! If you're controlling two traction motors positioned backto-back on either side of a robot, they'll need to turn in opposite directions to make the robot move forwards or backwards. In this case, you need to cross over the inputs to the LB1630s (IN1 of one goes to IN2 of the other and vice-versa) if you are controlling them together, or else wire the motors in opposite senses to the OUT1 and OUT2 outputs.

(070303-I)

301 Multi-purpose NiCd & NiMH Charger

POWER SUPPLIES, BATTERIES AND CHARGERS

C. Tavernier

Unless your robot is frugal enough to make do with primary cells without breaking the bank, or is environmentally-friendly and runs off solar panels, it will probably need to use rechargeable batteries as its energy source. Although very many chargers are currently available, they're not always suitable for our needs, in terms of the types and number of batteries they can handle. What's more, certain of them do not take very good care of the

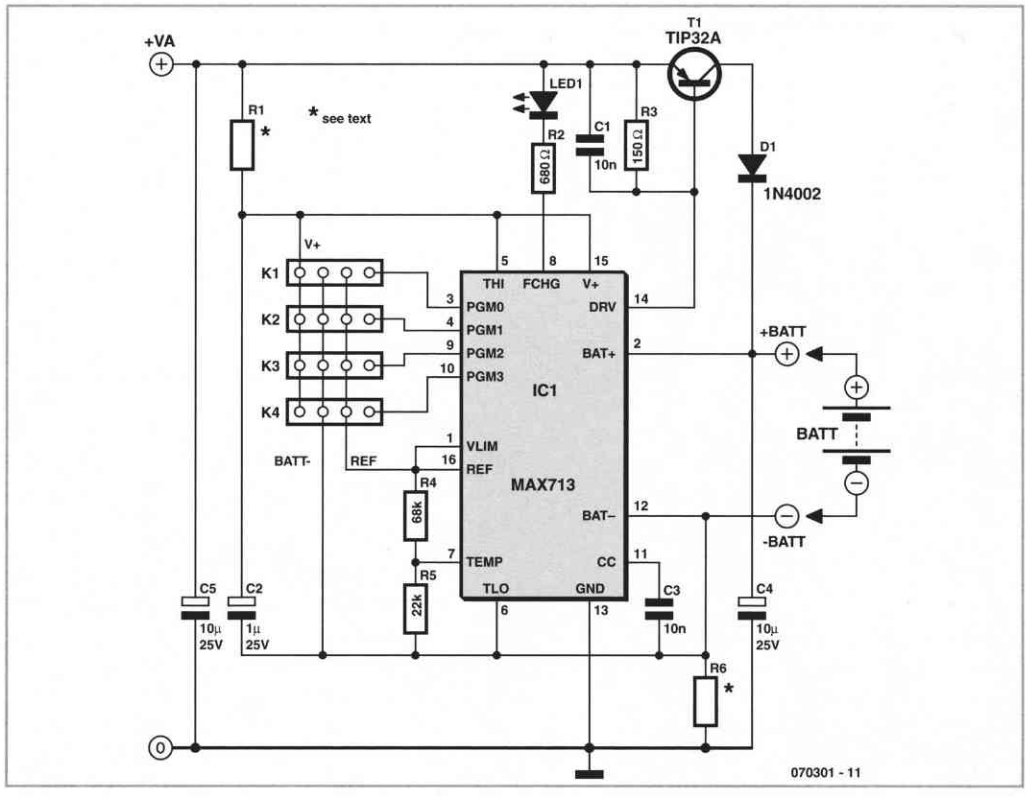

batteries entrusted to them, which can seriously shorten their life.

So this article proposes building your own tailor-made charger, using an IC that's already old, but still very much current: the MAX713 from Maxim. As all robots are different, we're not going to suggest a completely finished circuit, but will instead explain how to adapt it to suit the characteristics of the batteries you'll be wanting to recharge.

The MAX713's basic application circuit is shown in the figure, but as you can see, certain elements have no values shown. In addition, there are various configuration links. Via these various elements, the MAX713 lets you charge from one to 16 cells (a cell is a basic 1.2 V element), define the charging current, define the end-of-charge float current, and lastly, select the mode for detecting end of charge. As far as the latter is concerned, and so as to be compatible with any batteries you are likely to use in your robot, we've left out the temperature detection method, which requires a thermal sensor (NTC or equivalent) inside the battery. So resistors R4 and R5 in conjunction with the hard-wired links to inputs THI and TLO program the MAX713 into the mode that detects end of charge by voltage variation.

So now let's see how to determine the other elements that are still open to you, so you'll be able to build a charger that's just right for your needs. Note right away that the configuration links can either be hardwired on the PCB that you'll be designing for your charger, or else connected to multi-way switches to create a multi-purpose charger.

You first need to decide I_{fast}, the charging current for your batteries, whose capacity C is expressed in ampère-hours (Ah). This can be calculated from:

$$I_{fast} = \frac{C}{t}$$

where t is the desired charging time in hours.

Watch out! The MAX713 does not handle times over 4 hours. And take care not to pick a value for I_{fast} above 4C, which is currently the maximum current permitted for fastcharging NiCad and NiMH batteries. If you are able to choose a lower current, so much the better, it will prolong battery life. Program this charging time by wiring pins PGM2 and PGM3 of the MAX713 as per **Table 1**.

Then choose the number of cells to be charged at the same time.

For block batteries, you can find the number of cells by dividing the nominal voltage of the battery by 1.2 V. So a 9.6 V battery will contain eight cells. If the number of cells is 11 or more, the circuit can't be used as is, and in that case it's better to charge your batteries in two goes. Program this number by wiring pins PGM0 and PGM1 of the MAX713 as per **Table 2**.

Table 1: programming charge time via PGM2 & PGM3

Maximum charge time (min.)	PGM3	PGM2
22	V+	REF
33	V+	BATT–
45	NC	REF
66	NC	BATT–
90	REF	REF
132	REF	BATT–
180	BATT–	REF
264	BATT–	BATT–

Table 2: programming number of cells via PGM0 & PGM1

Number of cells	PGM1	PGM0
1	V+	V+
2	NC	V+
3	REF	V+
4	BATT–	V+
5	V+	NC
6	NC	NC
7	REF	NC
8	BATT–	NC
9	V+	REF
10	NC	REF
11	REF	REF
12	BATT–	REF
13	V+	BATT–
14	NC	BATT–
15	REF	BATT–
16	BATT–	BATT–

Then choose the unstabilized DC supply voltage for your charger (V_A in the figure) so that it is at least 1.5 V higher than the maximum voltage of the battery to be charged. If your battery has less than four cells, this rule no longer applies, as the MAX713 supply has to be a minimum of 6 V.

Then determine the maximum power dissipated in T1 using the following equation:

$$P_D = (V_A - V_{BATTmin}) \cdot I_{fast}$$

where $V_{BATTmin}$ is the minimum voltage of the battery to be charged. Choose T1 accordingly, if necessary fitting it with an appropriate heatsink.

Then determine the value of resistor R1 so the current drawn by the MAX713 will be 5 to 20 mA, using the equation:

$$R1 = \frac{V_A - 5}{I}$$

where I is between 5 and 20 mA.

Lastly, determine the value of resistor R6 by using the equation:

$$R6 = \frac{0{,}25}{I_{fast}}$$

and its power by using

$$P_{R6} = 0.5 \cdot I_{fast}$$

(theoretically $0.25 \cdot I_{fast}$ in fact, but it's best to use a safety factor of 2, hence the modified equation). Your charger is now operational, and is extremely simple to use; but because of the processors inside the MAX713, it is essential to make the connections to PGM0 to

PGM3 before applying power to the circuit, otherwise they may not be taken into account correctly. This is no problem for a hard-wired circuit, but if your charger uses configuration switches at this point, you'll need to power down and power up again to confirm any configuration changes made via these switches.
The LED lights when the charger is in fast-charge mode (at the current Ifast determined above). It goes out when fast-charging is over and the charger goes into float charge mode. The current generated in this mode is sufficiently low that the battery may be left connected to the charger indefinitely if necessary.
To make sure our explanation is crystalclear, here by way of example are the calculations for a charger for a pack of four 1.2 V NiMH batteries with a capacity of 1,800 mAh that we want to recharge in two hours.

- Calculate I_{fast}:
  I_{fast} = C/t, i.e., 1.8 /2 = 0.9 A or 900 mA.
- PGM2 and PGM3 connections:
  PGM2 tied to BATT– and PGM3 tied to REF, as we want a charge time of 2 hours, i.e. 120 minutes (in fact, we'll get a maximum of 132 minutes).
- PGM0 and PGM1 connections:
  PGM0 to V+ and PGM1 to BATT– since our battery comprises four cells.
- Determine V_A:
  V_A = 6.3 V minimum. We'll choose 9 V, to obviate any problems with possible supply voltage variations.
- Power dissipated in T1:
  PD = (9 – 4*)·0.9, i.e. 4.5 W. So we'll choose, for example, a TIP32A, giving us an excellent safety margin (P_{Dmax} = 40 W).
  (* fully discharged battery voltage estimated at 4 V)
- Calculate R1:
  R1 = (9–5)/0.01**, = 400 Ω. We'll use the closest preferred value, i.e. 390 Ω.
  (** : a current of 10 mA was chosen)
- Calculate R6:
  R6 = 0.25/0.9 = 0.27 Ω
- Calculate the power in R6:
  PR6 = 0.5·0.9 = 0.45 W. So a 0.50-W type is going to be fine.

As you can see, it's taken us all of five minutes to produce a charger tailored perfectly to our needs. Now it's your turn...

www.tavernier-c.com (070301-I)

Web Link
MAX713 spec. sheet:
www.maxim-ic.com/quick_view2.cfm/qv_pk/1666

302 Light-seeking Robot

SENSORS

B. Broussas

Whatever the interest of the many types of robot that can be built today, the mobile robot is still an unmissable stage through which any robotics amateur has to pass, for at least two reasons. The mobile robot presents a concentration of the difficulties, and hence solutions, that may be encountered in robotics. You have to deal with problems of mechanics and kinetics in order to manage its movements, problems of sensors, which can be extremely diverse depending on what we want to detect, or on the other hand avoid, behavioural intelligence problems for processing the information provided by these sensors, etc.

But the second reason why the robotics amateur needs to pass through the 'mobile robot' stage is often much less prosaic, as it's simply aimed at impressing the people around you (parents, friends, girl/boyfriend). What could be more impressive than this 'thing' straight

out of a 50s sci-fi movie, moving around all by itself following a line on the ground, avoiding chair legs, or responding to a signal from its master?
So, robotics novices of all kinds, you will have realized that a mobile robot is what we're going to suggest constructing. And so you'll be able to see quickly just what your own hands are capable of creating, we've chosen some solutions that are simple, but no less successful in producing a certain effect.

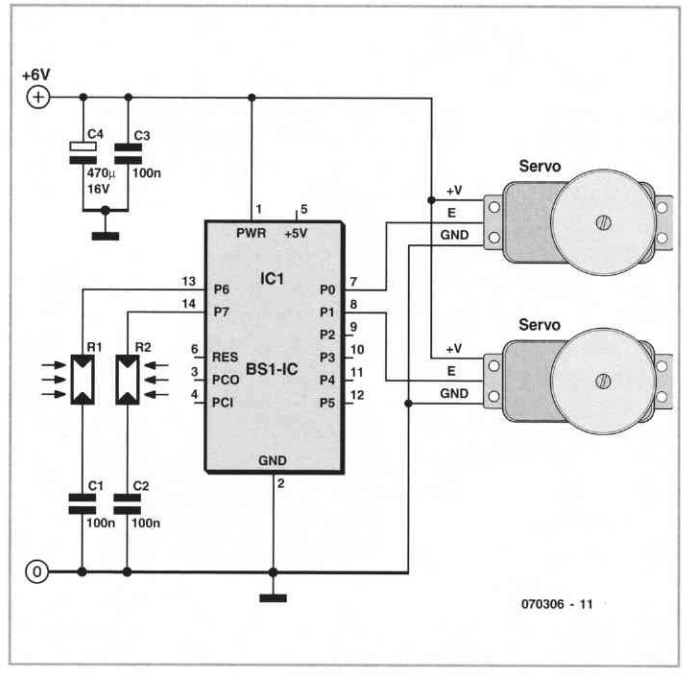

Quite simply, it's a light-seeking robot – a sort of moth (on wheels) if you prefer, since, just like its counterpart in the living world, it is always going to head for the brightest source it can find in the room where you let it loose.

To simplify construction and enable you to be up and running in just a few hours, or less, after reading this article, we suggest you take advantage of a mechanical base that's available in a kit. Having opted for propulsion using modified servo motors, we suggest two different bases: the Rogue Blue base from Rogue Robotics (*www.roguerobotics.com*) or the Carpet Rover 2 base from LynxMotion (*www.lynxmotion.com*). Of course, if you are good at mechanics, there's nothing to stop you building such a base yourself. It just needs to be propelled by two modified radio-control servos, and so will need a jockey wheel at the front and/or rear.

The modification to convert the servos into propulsion motors is explained elsewhere in this issue, but if you have any doubts about doing it yourself, as of quite recently you can also now buy such servos already pre-modified by their manufacturer. Take a look at Lextronic for example for this (*www.lextronic.fr*).

For our robot's 'brain', to show you it's not always necessary to use the very latest 32-bit microcontroller, we've decided to use the smallest of the Basic Stamps, the Basic Stamp I.

Listing

```
PINS = 0
DIRS = %00001111
SYMBOL RightStop = 150
SYMBOL LeftSTop = 150
SYMBOL Move = 30
SYMBOL LightDif = b2
SYMBOL RightLDR = b6
SYMBOL LeftLDR = b7
Main :
  POT 7, 128, LeftLDR
  POT 6, 128, RightLDR
  LightDif = RightLDR – LeftLDR
  b0 = RightStop + Move - LightDif
  b1 = LeftStop - Move + LightDif
  PULSOUT 0, b0
  PULSOUT 1, b1
GOTO Main
```

The complete circuit looks like **Figure 1**. The two ports P0 and P1 of the Basic Stamp I are used to drive the right and left propulsion servos. The brightness is measured using two photoresistors or LDRs (still called CdS cells in some literature) connected to ports P6 and P7 of the Basic Stamp I. The odd mode of connection used here makes it possible to use an instruction specific to the Basic Stamp I, the instruction `POT`, which measures the charging time of a capacitor connected to one of its ports, i.e. thereby the resistance of the LDR and thus the brightness falling on it.

For the robot to be able to head towards the brightest part of the room where it is operating, these two LDRs must be mounted pointing forwards, separated from each other by a small piece of cardboard or opaque PCB in such a way they can't both receive the same illumination.

The assembly can be powered by four 1.5 V batteries. This voltage is applied directly to the servos and to the unregulated PWR input of the Basic Stamp I.

Watch out! Under no circumstances connect the servo supplies from the Basic Stamp I's + 5 V output – its built-in 5 V regulator wouldn't appreciate it!

The software part of our robot is at least as simple as the hardware part, as you can judge from the listing on the previous page.

This listing is very easy to analyse. After an initial phase to define the labels used and the reservation of the RAM in the Basic Stamp I, we go on to measure the light using the instruction `POT`. This instruction returns, in the variable `LeftLDR` (or `RightLDR`), a number representing the resistance of the LDRs connected to P6 and P7 divided by a constant called a scaling factor. You may need to adjust this parameter to suit the characteristics of the LDRs you use.

The values thus obtained are subtracted one from the other to yield information about the difference in lighting between the two cells. The calculation of the pulse lengths to be applied to the servos can then be performed, noting that `RightStop` and `LeftStop` are the values making it possible to make the servos stop, and that `Move` is a parameter intended to set the basic speed of the servos, to which is added or subtracted the result of the difference in illumination.

Hence, for example, if `LightDif` has the value 50, b0 will be 150 + 30 – 50, i.e. 130, while b1 will be 150 – 30 + 50, i.e., 170. Given that the resolution of the `PULSOUT` pulse is 10 μs, the program will thus generate 1.3 ms pulses for one servo and 1.7 ms ones for the other, causing the robot to turn towards the direction of the LDR that is receiving the most light. So this program is fully functional, but, given the spread in the characteristics of both the servos, with respect to their drive pulses, and the resistance of the LDRs, it will undoubtedly be necessary for you to tweak certain numerical parameters again to obtain satisfactory results. To do so, note that:

- `RightStop` and `LeftStop` are equal to 1/10 of the pulse width that makes the right and left servos stop.
- `Move` lets you define the rotational speed of the servos when the robot is going straight ahead. It is equal to 1/10 of the difference between the pulse width for stop and the pulse width desired for moving straight ahead.
- The coefficients 128 used in the `POT` instructions can also be adjusted between 1 and 255 in order to obtain satisfactory behaviour of the robot, given the LDRs used and the ambient light in the place where the robot is operating.

Note too that if your robot seems to shy away from the light instead of moving towards it, you've probably reversed the wiring between the right and left servos or right and left LDRs (all this is relative, of course, depending on what you call front and back on the robot).
Now it's over to you...

(070306-I)

303 zBot: Wireless Link

COMMUNICATIONS

Jens Altenburg

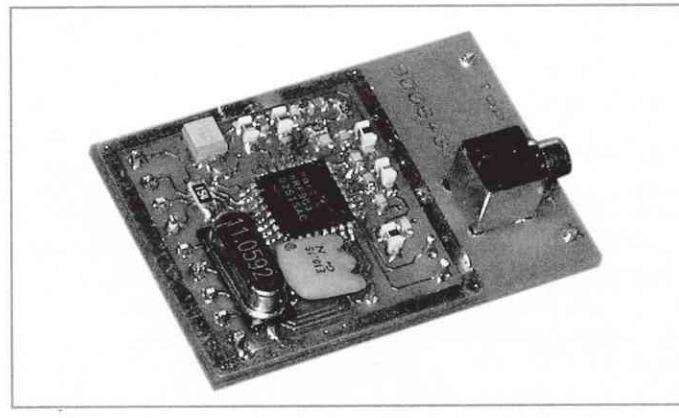

There exist a lot of wireless communication modules, all approved for use within the ISM radio bands (industrial/scientific/medical), for example, 433 MHz, 866 MHz and recently also 2.4 GHz. You get simple and cheap ones with low transmission data rates, and you can find excellent high-speed systems. "How much (will the thing set me back)?" is the most frequently asked question if you search for an RF module. Low-speed non-intelligent modules are cheap; high-speed intelligent ones, pretty expensive. That's easy but it doesn't help.

The CT-Video GmbH (markets a special module with high-speed digital data transmission capability and no intelligence, at a reasonable price. The module is based on a fully integrated transceiver with a digital interface. It is used in zBot [1] with good results.

The module comes as a small fully assembled and tested board. The board includes the complete RF sections. It works in the 433 MHz ISM band and has a transmit power of 10 mW coupled with a receiver sensitivity of about –108 dBm.

For implementing the module in your own projects, a software module is available, too. The module only needs a few resources of the micro, some GPIOs (general purpose input output pin) and one UART channel. The UART has to be programmed to give a baud rate of 76.8 kbits/s. The baud rate needs to be accurate, if not, you'll suffer an effect that manifests itself as low receiver sensitivity.

The software module for the wireless radio is a file called rf433.c.

(070173-I)

[1] The complete document called Zbot – the Robot Experimental Platform is available for free downloading from the Elektor website. The file number is 070172-11.zip (July/August 2007).

304 Overheat Detector Alarm/Switch

SENSORS

T. K. Hareendran

At the heart of this circuit is a precision integrated temperature sensor type LM35 (IC1), which provides an accurately linear and directly proportional output in mV, over the zero to +155 degrees C temperature range. The LM35 develops an output voltage of

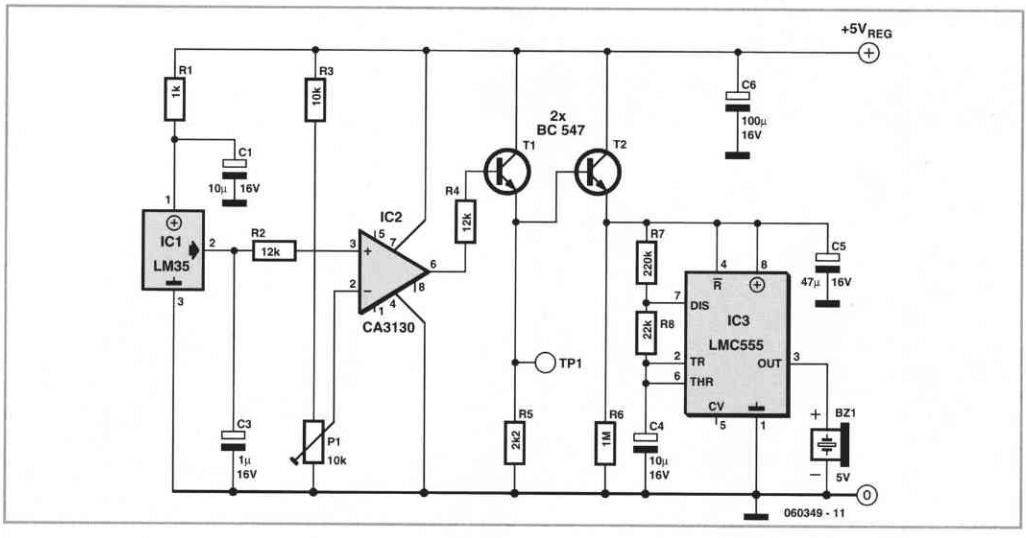

10 mV/K change in measured temperature. Designed to draw a minimal current of its own, the LM35 has very low self heating in still air.

Here the output of the LM35 is applied to the non-inverting input of a comparator wired around a CA3130 opamp (IC2). A voltage divider network R3-P1 sets the hreshold voltage, at the inverting input of the opamp. The threshold voltage determines he adjustable temperature trip level at which the circuit is activated.

When the measured temperature exceeds he user-defined level, the comparator pulls its output High to approx. 2.2 V causing transistor T1 to be forward biased instantly. T2 is also switched on, supplying the oscillator circuit around IC3 with sufficient voltage to start working. The 555 set up in astable mode directly drives active piezoelectric buzzer Bz1 to raise a loud alert. Components R7, R8 and C4 determine the on/off rhythm of the sounder.

A transistor based relay driver may be driven off the emitter of T1 (TP1). Similarly, replacing the piezo sounder with a suitable relay allows switching of high-power flashers, sirens or horns working on the AC mains supply.

(060349-I)

305 Bat's Ear

SENSORS

Alexander Wiedekind-Klein

To be precise, this ultrasonic distance measuring device is more than just an ear, since it generates pulses of sound at 40 kHz as well as listening for their reflections. The circuit in **Figure 1** is divided into two parts. At the top is the 40 kHz oscillator and a 'push-pull' output stage built around IC1.C and IC1.D. The oscillator is switched on and off according to the 5 V logic level on a control input (pin 2 of K1). P1 is adjusted to set the oscillator frequency exactly equal to the resonant frequency of the ultrasonic transducer, nominally 40 kHz.

Reflected signals are amplified by IC2.A and IC2.C, rectified by D1 and buffered by IC2.D. This circuit forms the analogue front end, and

1

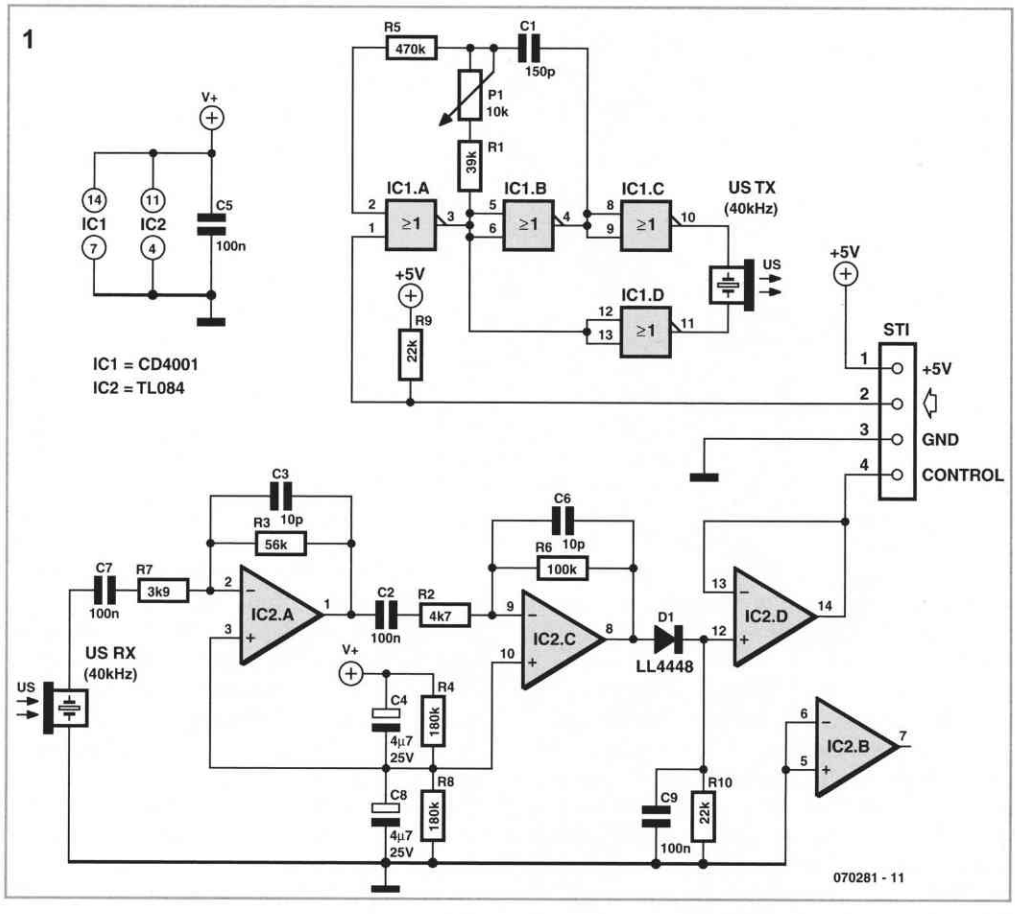

is connected to a microcontroller for subsequent signal processing. We will look below at the factors that need to be borne in mind when considering the digital signal processing algorithm to be used.

2

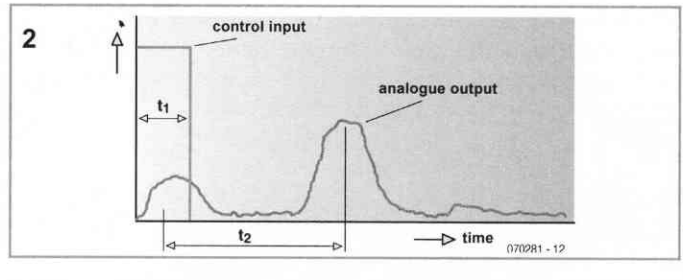

3

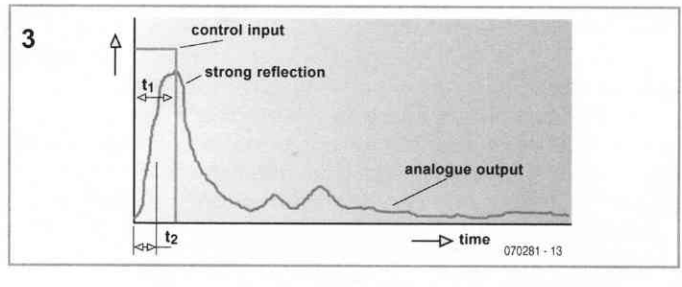

After a burst of ultrasound lasting approx. 2.5 ms is transmitted we sample the envelope of the received signal as delivered by the analogue front end for approximately 50 ms. In this time, sound travels approximately 16 m, and so we have a maximum range of

8 m, because the sound must travel to the distant object and back.

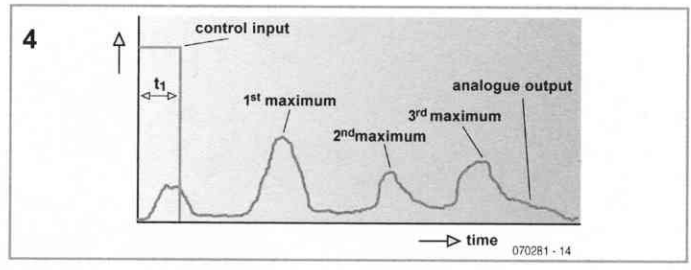

Figure 2 shows a typical received signal. The green rectangular pulse represents the signal at the control input (pin 2 of K1), which switches on the oscillator for the 2.5 ms pulse period. During this time (t1) we can already see some signal at the output of the receiver, as it is impossible to avoid some direct reception of the transmitted pulse. This effect has to be taken into account in subsequent processing.

The second peak in the signal, after time t2, is a reflection from an object. The time is proportional to the distance to the object. Measurement of time t2 commences at the middle of the transmit burst (i.e., approximately 1.25 ms after the oscillator is enabled), and finishes when the amplitude of the reflected signal reaches its peak value.

In air the distance to the object measured in centimetres is easy to calculate: to a good approximation it is equal to the time to the reflection in milliseconds multiplied by 16. For example, a time of 10 ms for t2 corresponds to a distance of 160 cm.

If an object is very near, the reflected sound will be very loud and be received after a very short time, possibly while the pulse is still being transmitted (**Figure 3**). In this case it is best to measure the time taken for the received signal to reach half its maximum amplitude from when the oscillator is switched on. This time can then be used to form an estimate for the distance to the object.

If there is a number of reflecting objects at different distances there will be several reflected pulses of different amplitudes (**Figure 4**). In this case it quickly becomes apparent that if we used a simple threshold detector in place of the microcontroller it would be impossible to get reliable results. A microcontroller with 'intelligent' software could, for example, be programmed to calculate the distance to the nearest object or to report the distances to several objects simultaneously.

Since the only connections to the circuit are a +5 V supply and ground, a control signal for the transmitter and the analogue envelope signal returned by the receiver to the processing hardware, it is straightforward to wire up four copies of the circuit mounted at right angles to one another. In a robotics application this would give the robot the ability to detect objects in any position relative to itself.

(070281-I)

306 Servo Control from a PC

MICROCONTROLLERS

Bas Lijten

Driving multiple servos via a microcontroller can be quite a problem for many people. Fortunately, a servo controller is available which can be controlled from a PC: the SSC-32. The SSC-32 is an open-source controller which is connected to the serial port. It has 32 outputs, which makes it possible to control 32 servos simultaneously. Each output can also be used as a general purpose output with TTL levels. In addition, the microcontroller has four digital inputs and there is an extra socket for fitting an EEPROM. This was not being

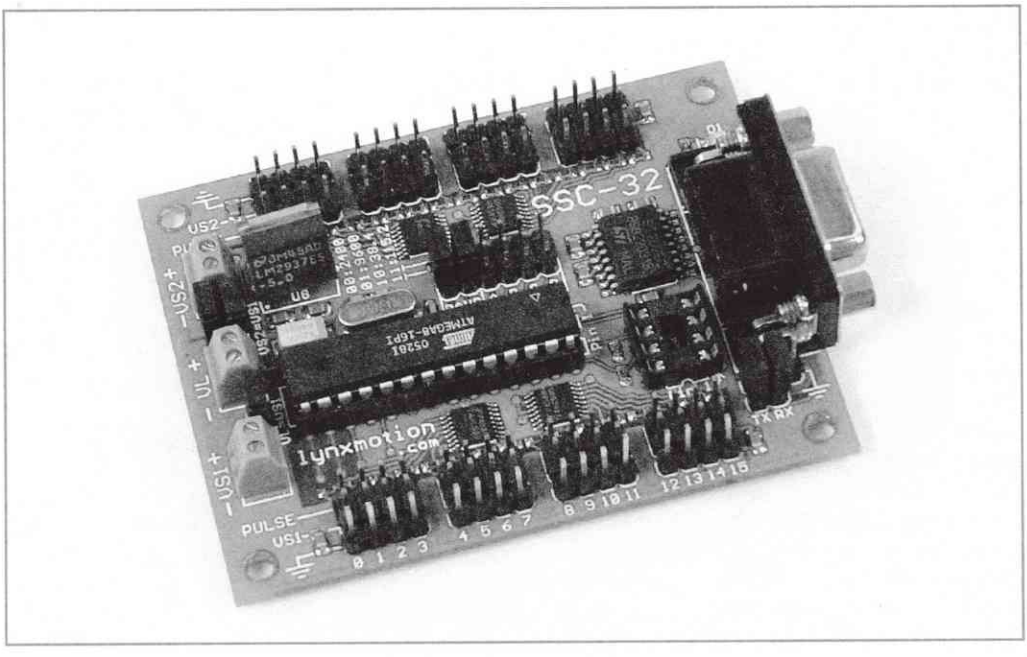

used at the time of writing, but it is likely that it will be used in future updates of the firmware.

The servos that are connected to the controller can be controlled in a very simple way. Only the numbers of the servos to be controlled, the pulse width (position) and the speed or time need to be known in order to make a servo move. If a speed is specified then the servo will move to the required position at that speed. If a time is specified then the servo will take that amount of time to move to the new position.

The introduction already mentioned that the servos can be controlled simultaneously. This is possible by means of a 'Group Move' command. This is done by setting the numbers of the servos, the pulse width and the time that the movement should take to reach the new position all in one command. In this way all servos move simultaneously.

This Group Move feature can be especially handy if, for example, you would like to make a robot arm move with a fluid motion. The controller carries out its own calculations, such as the speed at which the servos have to turn.

The controller also contains functions to drive a hexapod, a robot with 6 legs. In this way there is no need to come up with an algorithm for the PC to let the robot walk, because the functions are already there to make the robot move its left or right side with a single command.

The code is freely available since the microcontroller contains open-source software. As a result you can add, improve and remove functionality yourself. Not happy with the hexapod code? You can then 'easily' rewrite it.

In the same way you can also add functionality. For example code to move a robot arm to a particular location in a Cartesian coordinate system. By doing so there is no need to control individual servos from the PC but simply send one coordinate to move the arm the correct way.

Because the controller is both easy to drive and easily modified by an experienced programmer it is very suitable for anyone who would like to spend some time with robotics.

(070373-I)

Manufacturer of the controller:
www.lynxmotion.com

307 Football with Robots

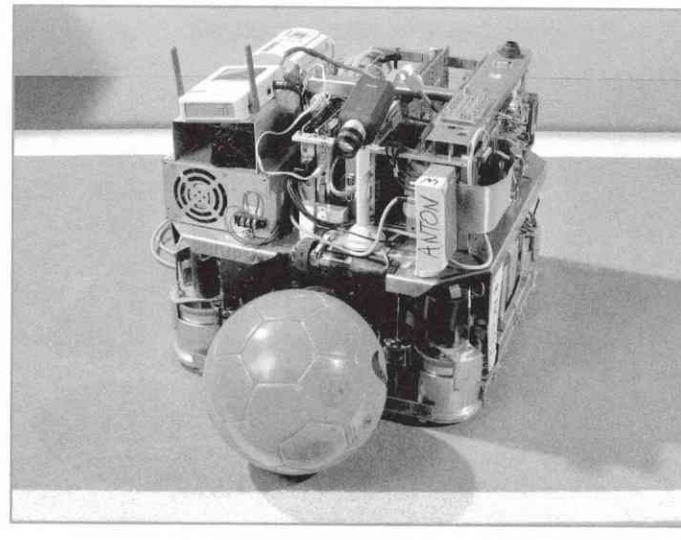

In this robotics part of '310 Circuits' we can hardly afford to overlook the RoboCup. The RoboCup is a collective international project with the objective of fostering research in artificial intelligence, robotics and related fields. Football has been selected as the basis, and the ultimate objective is to have a team of fully autonomous humanoid robots in 2050 that can defeat the world football champions.

Four leagues are open to participants: the simulation league, the small and midsized league, the four-legged league, and the humanoid league. A team from Philips is participating in the mid-sized league (MSL).
The robots in the MSL must be DIY constructions and must be autonomous. This means that all their intelligence must be on-board, and nobody is allowed to control the robot from the sideline.
The Philips robots are equipped with the following components to enable them to play football:

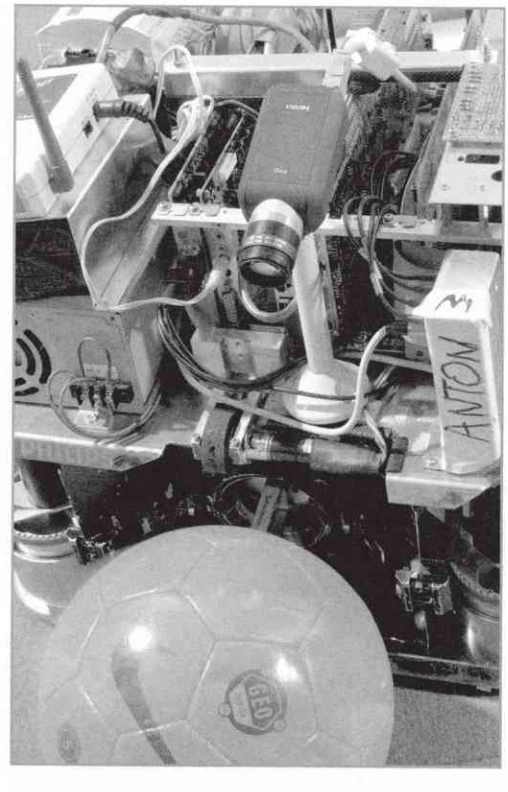

- two Vision cameras (1 fixed camera at the front and 1 omnidirectional camera)
- a PC
- a PLC controller
- a wireless network interface
- four wheel units
- four sensors for detecting the white lines
- a ball handler
- a shooting mechanism
- batteries

The Vision cameras are the eyes of the robot. The robot filters the incoming images, using

colour to recognise the ball, the goals, the corner posts and other robots. The camera at the front helps with precise orientation. The robot uses the omnidirectional camera, which is oriented upward toward a special mirror, to keep an eye on its surroundings so it can see where it is and what is happening around it.

The PLC controller monitors the status of the robot: are the batteries still OK, is the shooting mechanism working properly, etc. The robots on the team communicate with each other via the wireless network, so they don't try to steal the ball from each other.

The built-in PC runs on Linux and processes all the data used by the robot to determine where it is and what its best plan is for getting the ball and scoring. The white-line sensors help the robot determine where it is.

The PC drives the four wheels of the robot via a special module. Each wheel can be turned and driven independently. This means that the robot can make a pirouette while heading toward the ball.

The purpose of the ball handler is to keep the ball as close to the robot as possible without actually grasping it. Grasping the ball is against the rules. The ball handler lets the robot move sideways and backwards without losing the ball. It also helps the robot shoot the ball straight forward. It holds the ball directly in front of the shooting mechanism, which can 'kick' the ball at approximately 30 km/hr. The energy for the shot comes from a spring, which can be wound up in a couple of seconds and is released when the software gives the order to shoot.

A total of eight robots participate in each game (four on each side). They play on a field with dimensions of 8 by 12 metres, and the game begins with looking for the ball after the referee gives the starting signal. After the ball is found, the trick is to travel toward the opponent's goal in order to score, and of course to try to avoid losing the ball to an opposing player. Naturally, the robots also try to

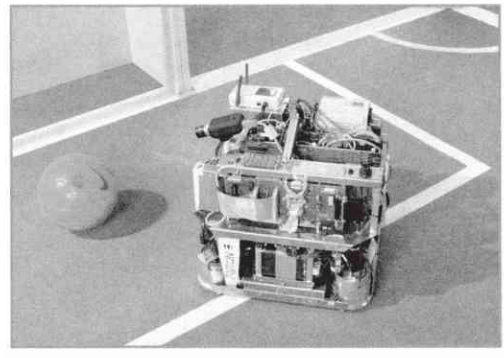

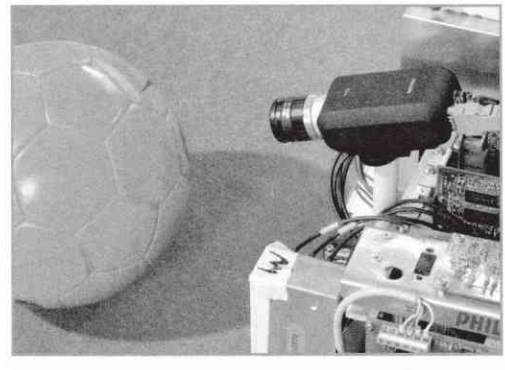

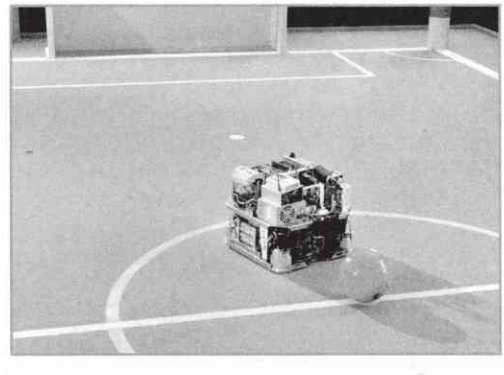

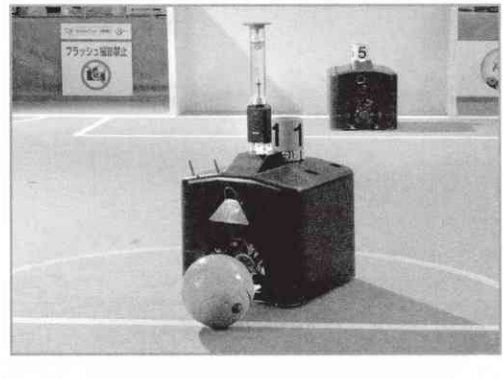

steal the ball from the robot of the opposing team before it can score a goal.

As the robots operate entirely autonomously, their behaviour must be programmed in advance. A collision is punished by a yellow card, and a repeat offence yields a red card, which means the robot has to leave the field. The robot shoots at the goal as soon as the goal opening is large enough. However, winning takes more than just firing off hard shots; speed and tactics are at least equally important.

(070359-1)

308 Driving Stepper Motors

ACTUATORS

Using a Basic Stamp or a PIC programmed in Basic

C. Tavernier

When we want to motorize a robot, two main solutions are open to us: the DC motor, used alone or in a converted radiocontrol (RC) servo system, as explained elsewhere in this book; and the stepper motor. Although the DC motor is very suitable for everything to do with propulsion, the stepper motor is more suitable when it comes to performing precise positioning, as required for a robot arm, a sensor moving in one plane, etc.

But while controlling a DC motor is relatively simple (it turns as soon as it is powered), controlling a stepper motor is a little more tricky. They only turn when their various windings receive pulses, which have to be presented in a quite specific order to make the motor turn one way or the other.

Because of this pulsed drive, these motors don't turn continuously, but in fact advance at each pulse by one basic step – whence their name. The size of these steps can vary between 1.8 and 7.5°, depending on the type of motor used. This stepped advance makes it possible in principle for the program controlling the motor to know its position very accurately. But for this to remain true, we have to take care not to exceed the motor's maximum allowable loading, as in that case the motor might fail to advance for every pulse received, and thus 'skip' some steps.

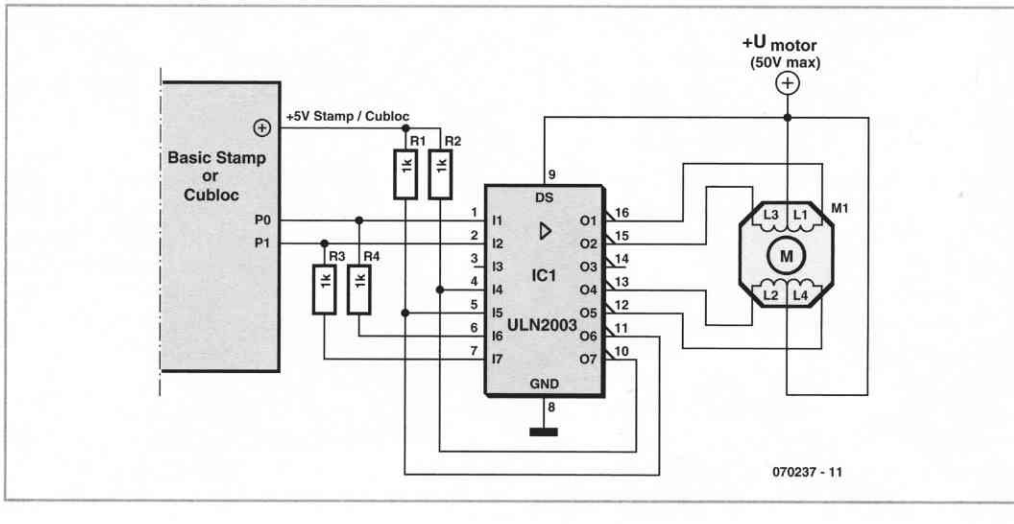

Another far from negligible advantage of the stepper motor is that if it is powered but does not receive any pulses, it remains blocked where it is. So we have a sort of electric brake – though of course still on condition that the motor's load capacity is not exceeded, as mentioned above.

There are currently two families of stepper motor: single-pole and double-pole. The former are simpler to drive, as all you have to do is apply voltage or not to their windings, while in 2-pole motors, the voltage applied to these windings has to be regularly inverted, slightly complicating the circuitry that's required.

Table 1 indicates the order in which a single-pole motor's windings must be powered to make it turn. Going through the columns of this table from 1 to 4, the motor turns clockwise, while reversing the order changes the direction of rotation. Each column of this table corresponds to one mechanical step of the motor – remember, that's between 1.8 and 7.5 degrees depending on type.

```
' Control of a unipolar stepper motor
' The step number is put in w1
' The rotation direction is defined by b0

' Variable's definition

Symbol direction = b0
Symbol incr = w1
Symbol index = w2
Symbol delay = b6

' Initialization

dirs = %00000011
pins = %00000001
b1 = %00000001

' Here the application program must initialize
' incr, direction and delay with the required values

if direction = 0 then incrincr
b1 = b1 ^ %00000011

incrincr:
        for index = 1 to incr
                pins = pins ^ b1
                b1 = b1 ^ %00000011
                pause delay
        next
```

Table 1

Step number	1	2	3	4
Winding 1	1	1	0	0
Winding 2	0	0	1	1
Winding 3	1	0	0	1
Winding 4	0	1	1	0

There are numerous specialist ICs on the market for driving stepper motors, and various solutions are on offer in this issue of Elektor, but if your robot uses a Basic Stamp or a PIC microcontroller programmed in Basic, there is an extremely simple and cheap solution for making it drive this type of motor.
All we actually need to do is use a perfectly ordinary ULN2003 or ULN2803, respectively seven-way or eight-way integrated power Darlingtons normally used to drive relay coils.

The required software is very simple, thanks to a couple of tips suggested by Parallax (the manufacturer of the Basic Stamp).

The first is to note that the status of windings 1 and 2 on the one hand, and windings 3 and 4 on the other, is always opposite, as indicated in the attached table. Because of this, the motor can be driven using just two of the Basic Stamp outputs, as shown in the very simple circuit we are suggesting.

Windings 1 and 3 are driven from two lines of the Basic Stamp port, after amplification by the ULN2003 (or 2803). Windings 2 and 4 receive these signals after inversion, performed

using two of the spare amplifiers in the ULN2003 (or 2803), which is overkill but perfectly practical. Note the presence of the two essential 1 kΩ pull-up resistors, connected to the outputs of the amplifiers in the ULN2003 (or 2803), as the Darlingtons are only open-collector.

The second tip suggested by Parallax consists of directly calculating the sequence of signals to be applied to the Basic Stamp's P0 and P1 outputs, rather than getting these data from a table. All that's actually needed is a simple XOR logic function, as shown in the **program listing**.

This short example of code may be included as is into a more complete application. As can be seen, it makes the stepper motor connected as shown in the figure turn through the number of steps previously loaded into w1. The direction of rotation is determined by the contents of b0. If b0 is anything other than 0, the motor turns one way; if not, it turns the other way. This program also lets us define the wait time between each step, by means of the data used in the PAUSE instruction; the only proviso is not to reduce this delay too much, taking into account the motor being used and the load it is driving.

To be as general as possible, note that this example of code has been written in Basic Stamp I language. So it is fully transposable, without restriction, to any other type of Basic Stamp, as well, of course, as to any PIC programmed in Basic, since the majority of Basic compilers for PICs are compatible with the Basic Stamp I language. It can likewise be easily migrated to a PicBasic or a Cubloc from Comfile Technology.

www.tavernier-c.com (070237-I)

309 DIY Wheels

TIPS & TRICKS

Marcus Bindhammer

You don't have to reinvent the wheel for your robot, but you may have to make your own somehow if you can't or don't want to buy them ready made. The handicrafts aspect of making your own wheels is relatively undemanding, and one hand (but not a left hand...) is enough.

Use a compass to draw circles with a diameter of 50 mm on a piece of 5-mm plywood, and then cut or saw the discs out. Drill a 3-mm hole in the centre of each disc.

As you can see from the drawing, an M3 screw with a length of at least 30 mm must be fitted in the hole. Now secure the screw using a washer and nut, and then clamp it in the chuck of a drill press. Using a small block of wood wrapped in sandpaper, you can quickly sand the disc into a nice circular shape.

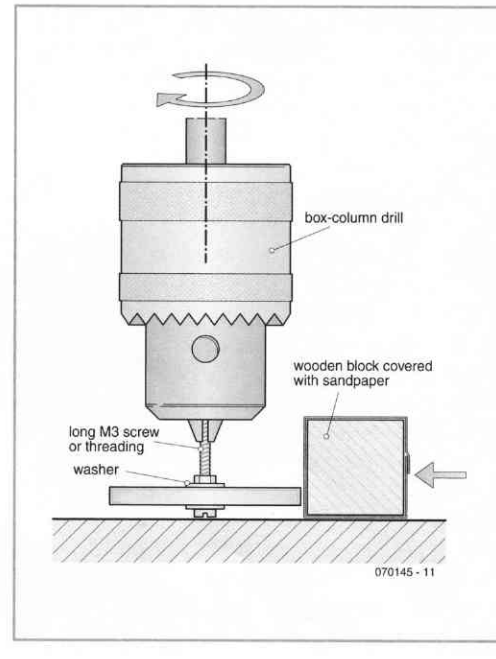

Finally, fit a length of toothed rubber belt around the circumference of each disc (old video recorders are a good source) or glue flat elastic bands to the running surfaces. After you remove the screws, all you have to do is fit the wheels on the axles and secure them with a bit of superglue.

(070145-1)

310 KiCad: a High-level Tool

MISCELLANEOUS ELECTRONICS AND DESIGN IDEAS

Electronic CAD available to all

Rémy Halvick

For the month of November, 2005, we had electronic CAD as the theme of Elektor magazine. The issue came with a free DVD packed with software, most of it operating as a Windows demo version. One of the programs stood out due to several unique features. Actually, KiCad is a software package distributed for free under a GPL license, operating in Linux, Windows and Mac OS X environments. As an added treat, this marvel is available in a remarkable number of languages!

Things have greatly changed since the time when electronics hobbyists (professional and/or amateur), peered over schematic diagrams for many hours, drawing circuits with pencil and paper, then produced it all over again for a 'clean' version. Businesses were the first to have the means to utilise CAD software such as Orcad or Protel, on powerful systems with staff especially trained for this task. For a long time, this was too expensive for amateurs.

Electronics fans today are much more spoiled — they can utilise programs that use little resources, at reasonable prices; some even come as 'light' version for free, but with restrictions that seriously limit would-be users.

KiCad was of course included on the free 'Kaleidoscope' DVD. It was developed by a professor/researcher, Jean-Pierre Charras, from the Joseph Fourier University in Grenoble, France, in order to learn programming in C++, as he claims. The first rough drafts were begun in 1992 in DOS, the most recent versions are available as downloads on the university website (see the links at the end of this article).

The supported OSs are numerous in addition to Windows (2000, XP, and W98 with slight restrictions), the others were delivered, tested and ready to operate with Mandriva and CentOS distributions. It also was just integrated into the Debian distribution, thanks to the efforts of a few dynamic volunteers. Users have also compiled sources in numerous other OSs: Solaris, FreeBSD, etc. Mac OS X remains an exception, because, even if KiCad can be compiled on these machines, its operation is currently still

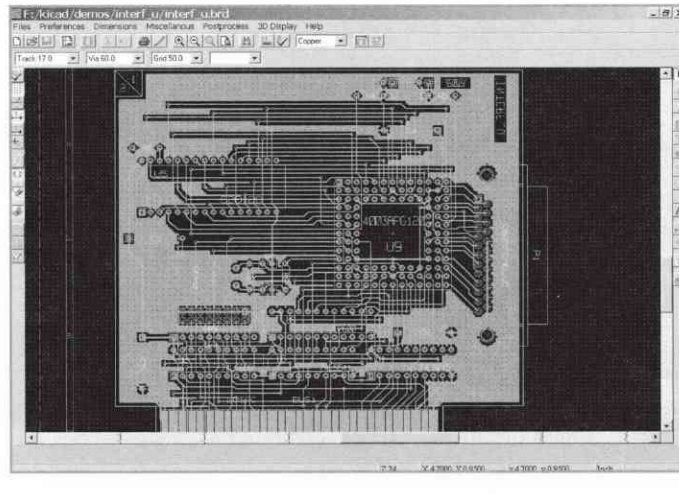

hampered by a bug from the Open Source wxWidgets graphic library, used by KiCad. Let's hope that this problem will be resolved soon: the new version will be distributed as soon as that happens, and the same is true for those that operate in Linux and Windows.
KiCad is available in the following languages: French (original language), English, German, Spanish, Portuguese (Brazilian), Italian, Slovenian, and Hungarian for the user interface (GUI).
The user manuals are available in the primary four languages. Versions in German, Hungarian, Polish, Korean and Russian are at various stages of translation. Tutorials are also appearing in several languages: French, English, Brazilian. All of these documents have are created by volunteers who believe in Open Source and free software.
If the price of this software package defies all competition, that does not mean that you will have an 'inferior' tool. Even though KiCad is far from being an overly complicated software package like Orcad and Altium, its qualities are nonetheless remarkable: you can judge by the screenshots. The graphic interface, simple and very easy to learn, is intuitive and powerful, thanks to one of the many features that uses a 3-button mouse. The keyboard shortcuts are limited in number but efficient. The various output formats (printer, Postscript, Gerber, hole-making and automatic placement files) are flawless and adapt to all printers, as opposed to some DOS software.
This software package is composed of:

- KiCad: project manager, from which one can launch the following programs.
- EeSchema: simple or hierarchical schematic capture.
- CVPCB: used to link components with their schematic footprints.
- PCBNEW: design of printed circuits.
- Gerbview: display of Gerber files.



Figure 1 *KiCad is project-based, just like similar products on the market.*

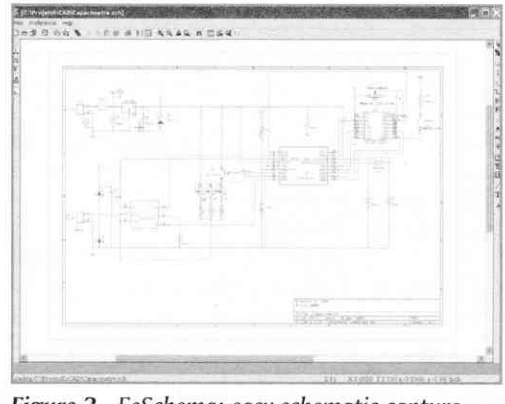

Figure 2 *EeSchema: easy schematic capture.*

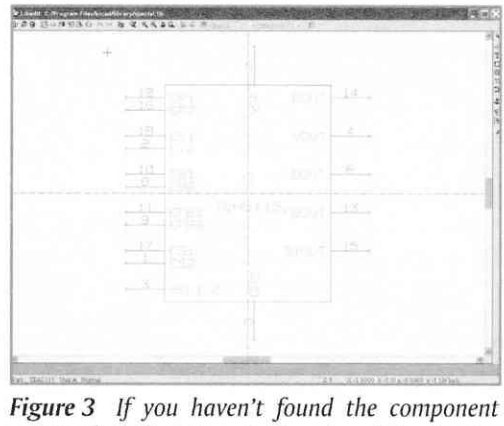

Figure 3 *If you haven't found the component you need on the Internet, there is nothing to stop you from designing it with Libedit!*

Installation

KiCad is available on the DVD that accompanied *Elektor Electronics*, November 2006. More recent versions can be downloaded from the websites devoted to KiCad (see links 1 and 2). At the time this article was written, the current version is dated August 28, 2006. Archives in .tgz or .zip format are about 70 MBytes. To install the software package, you

just need to decompress the archive in C:\Program Files\ (or /usr/local for Linux users), and to place a link pointing to the executable KiCad file in the sub directory X:\kicad\winexe (or /usr/local/kicad/linux). That is the extent of it – no further torture will be inflicted on your precious PC.

KiCad

The KiCad project manager (**Figure 1**) allows you to create or select a project; meaning mainly schematics and a printed circuit. In this way, you also have access to the language selection options for the graphic interface and online help.

EeSchema

EeSchema (**Figure 2**) lets you input a simple or tree (hierarchical) structure. The screenshot is used to get an idea of the simplicity of the interface which does not, however, sacrifice functionalities. The menu toolbar only has three sections: File, Preferences, and Help. In addition to the traditional open/save/print options, the File menu allows you to generate drawing files in PostScript, HPGL, and SVG formats.

In Preferences, you can select which libraries to be used (which will appear when adding components), as well as various options: colour, display and grid pitch (scale), orientation and incremental values for repetitive tasks; all of these options may be modified, of course, if the need should arise, although the default options satisfy most needs. The help menu is very standard.

Three icon bars give you access to most of the tools which you will need. The one on the left lets you manage the graphic 'look': grid display, its pitch, measurement units (millimetres or inches), cursor shape, orientation of the lines (by 45° increments or any orientation); the icon (**A**) lets you display the hidden power connections to the parts.

Due to their small size, we propose icons in a magnified version in ***Figure 8*** *with the reference letter. The icon H is actually a double icon.*

The upper bar has various tools: file manipulation (open, save); button (**B**) allows you to



Figure 4 *CVPCB: choice of component case.*

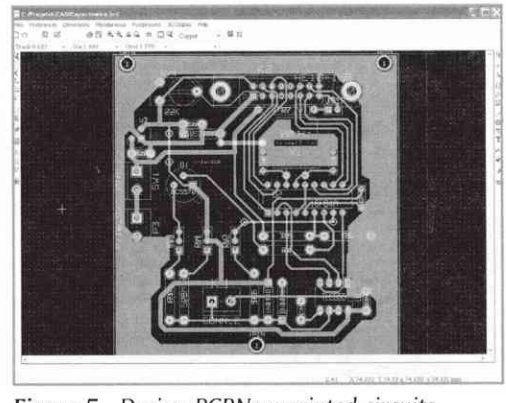

Figure 5 *Design PCBNew printed circuits.*

choose the page format (A4 to A0 and A to E, as well as a custom format defined by the user) and to fill in the various sections of the of the schematic. The next version of KiCad, which apparently is about to be released, will add an Undo/Redo function to **EeSchema**. The next two icons relate to the **Libedit** component display /editor (**Figure 3**); in fact, you can create any special symbol that you might need for your schematic. The **CVPCB** and **PCBnew** icons follow after the traditional editing tools (cut, copy, paste) and print; we will examine their role a little later. The 4 following tools deal with display: + and – zoom, drawing refresh and auto zoom which lets you have a better look by reframing the entire schematic. These functions are also accessible from the F1 to F4 function keys. When the diagram becomes cluttered, sometimes it is difficult to find R59 or U12; you can then use the search tool by clicking on (**C**).

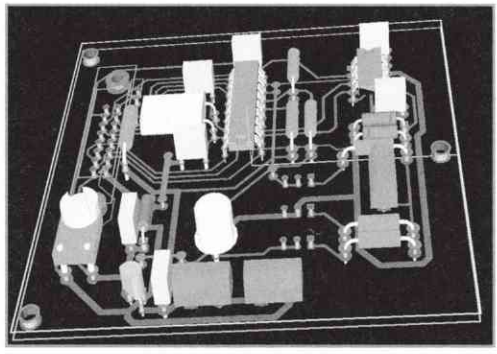

Figure 6 *3D display of the capacitance meter as described in Elektor.*

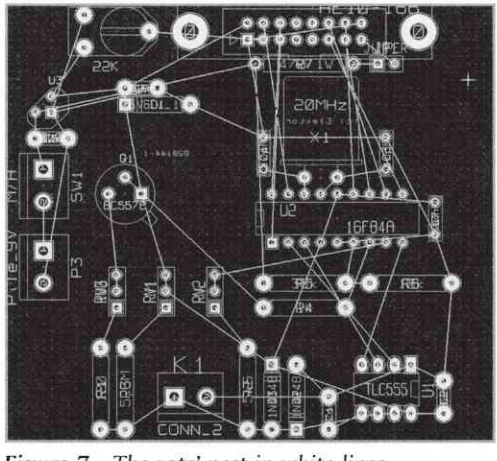

Figure 7 *The rats' nest in white lines.*

The following icon (**D**) allows you to generate a netlist in different formats; you can even have yours by creating a plug-in! Before arriving at this point, you would have taken care to number the components, thanks to the automatic annotation tool (**E**).
The next-to-the-last tool in the top toolbar (**F**) is very useful: it deals with verifying that the electrical rules are respected or DRC (Design Rules Check). The principle is the following: each component pin is defined while it is being drawn as input, output, open-collector, 3-state, etc. The DRC tool will carry out various plausibility checks: output connected to the power supply, unconnected gate input and others; you can define the checks as well as their result: error, warning or no error in the options tab. This is used to avoid gross errors and forgotten connections.

The last icon is for generating the list of components (BOM = bill of material), which will help you with your shopping, especially if you export it to a spreadsheet in order to optimise supply sources.

The right icon bar groups the different drawing tools: adding component (the gate), connection by wire or bus, labels, commentaries and other embellishments that will improve the presentation of your schematic.

The rest of the required commands are accessible from the contextual menus, with one right mouse click. That is one of the strong points of Kicad, which, by proposing the tools at the time they are needed, makes it possible to preserve a clear and easy to grasp interface. Nothing like those heavyweights with their dreadfully cluttered user interface, almost impossible to master by anyone who is not a specialist. These contextual commands are dependent on the part you choose to click on, using the right button. For example, clicking on a component opens the following possibilities: move, orient, edit, copy, or delete the component, front/rear zoom, auto function, recalculate the drawing, select the scale. The menu is adapted depending on whether you clicked on a component, a wire, a text field, etc.

The mouse also makes it possible to display a zone that you will select by clicking with the wheel: without a doubt, efficient and practical!

The status bar, at the bottom of the window, gives you the following information: zoom factor, absolute and relative coordinate of the cursor and measurement units (inches or millimetres).

CVPCB

CVPCB, accessible from EeSchema or KiCad, makes it possible to link a case to each component from the net list that you will have created in EeSchema (**Figure 4**). There, also, in addition to the print libraries that come as standard (through-hole or SMC components), you can download many others on the Inter-

net. If you use KiCad intensively, you can eventually use the automatic association system component case that makes it possible to automate this task.

PCBNew

You gain access to PCBNew from the KiCad project manager (recommended), or directly using the icon (G) (**Figure 5**). This printed circuit design software is made in the image of EESchema: simple, easy to get used to and easy to use; that does not mean its performance is lagging, here are some examples: 16 copper layers, 12 technical layers (lithography, resist coating, dimensioning, etc.) components, through-hole or SMC, work done to one/ten-thousandth of an inch, dynamic rats-nest, Design Rules Check, ground plane, and it has a very capable high-performance internal router that can operate in a single-sided layer! What more can an amateur ask for? And a 3D view of the board surface just for the visual pleasure. It is shown in **Figure 6**!

But let us begin by the beginning: PCBNew. The general philosophy of this graphic interface is the same as the one for EeSchema: simple, easy approach, but also as efficient, thanks to an intensified utilisation of the mouse and the contextual menus, and the defining of the two operating modes: placement (**H** left) and routing (**H** right). These two modes will affect the contextual menus that will be shown.

We will not insult you by reviewing file menus and preferences, except to remind you of the output formats: PostScript, HPGL, Gerber 274X, and Excellon, in addition to your favorite printer. The 'Dimensions' menu is used to define... the dimensions by default of the traces, vias, pads and texts. The 'Miscellaneous' section groups IC detailing accessories.

The post processors enable the automatic placement file generation of components and hole-making files. This gives you the possibility of having your IC made by a professional, by sending him the necessary files. The '3D' and 'Help' menus speak for themselves. Under the different menu bars you will find

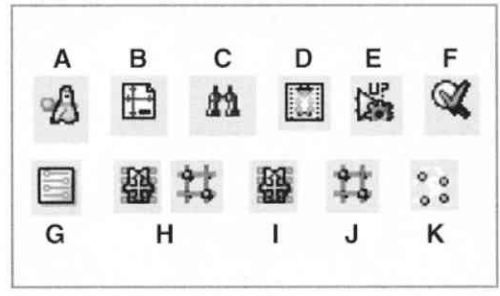

Figure 8 The main icons on a large scale and in low resolution (the originals are a standard size, 16 x 16 pixels).

scrolling lists that allow you to easily change the width of the trace, dimensions of the vias, grid pitch number of the layer and zoom.

The icons located on the left of the window are related mainly to what is represented on the screen: display of the polar coordinates in the status bar, measurement units, shape of the cursor, display of the rats-nest (representation by segments of the connections to be routed), automatic erasing of traces that you have re-routed, display of pads and traces in full lines or in contours, in high-contrast display.

The upper icon toolbar, just like in EESchema, groups the file commands and the selection of the sheet format. The next icon allows you to access the module editor (or footprints) of the components in the unlikely case that the libraries supplied and those available on the Internet are insufficient. Its operation very much resembles the one of the LibEdit component editor, which means you should feel more comfortable with it.

We have no specific comment on the following print and tracing icons except that they resemble the ones in EESchema.

(**D**) is the starting point for designing a printed circuit: reading the netlist. Your components are found 'in bulk' next to your sheet. To spread out the components in order to be able to then gather them, go to placement mode (**I**). With one right click, do global move and place → Move all of the modules: and all

of your components will be carefully aligned. If you prefer, after having defined the contours of your printed circuit (select the PCB contour layer and define a closed figure that pleases you), then Global move and place Autoplace all of the modules. It will do half of your work by optimising the length of the connections. Any intermediary state is conceivable with the interactive auto placement options.

It is already time to move from placement mode to routing mode with the icon (**J**). With one right click, do Global autorouting → Select layer coupling.

It is usual to choose a one-sided circuit board; in other words, the top layer will be in copper, just like the lower layer. The autorouting feature (global autorouting → Autoroute all modules), will greatly lessen the work, if it does not route your entire board. All that remains is to finish in manual mode, or to move a few components and re-route the overall project.
Manual routing is accomplished, of course, with the mouse, and you will quickly notice that PCBNew knows how to place your traces in a well-disciplined fashion, without laboriously defining the smallest change in orientation. Displaying the rats' nest (**K**), (see **Figure 7**) enables quick and reliable work. If straps are required, they will be shown on the traces on the component layer (in red on Figure 6). Once the routing has been finished, you can add centring targets, dimensioning, and any other graphics such as a logo, copyright symbol, etc.

A wise precaution consists of carrying out a DRC check, in order to ensure that no routing error or short-circuit still exists. All that is left is for you to do is to print or plot, to start with on paper, in order to determine the factor of the precise scaling, setting it to the scale requested by your printer. You can then print a transparent to isolate your IC or to generate the files requested by your supplier. Of course, professionals may demand much more from KiCad; a certain number of companies are already using it around the world.

Internet Links

[1] Kicad 1 homepage
www.lis.inpg.fr/realise_au_lis/kicad/index.htmlx
[2] Kicad 2 hmepage
iut-tice.ujf-grenoble.fr/kicad/index.html
[3] An active group!
http://groups.yahoo.com/group/kicad-users/
[4] Libraries, user guides
www.kicadlib.org/
[5] KiCADWiki
http://kicad.bokeoa.com/wiki/index.php/Main_Page
[6] Utilities
www.rohrbacher.net/kicad/quicklib.php
[7] Goodies from Brazil: footprints, utilities, etc.
www.reniemarquet.cjb.net/kicad.htm
[8] KiCAD, from the professional point of view
http://xtronics.com/reference/kicad.html
[9] Developers
http://developer.berlios.de/projects.kicad
[10] Kicad hosted in a free world
http://kicad.sourceforge.net/en/index.shtml
[11] Kicad, from the Russian point of view.
http://ru.wikipedia.org/wiki/Kicad

In conclusion

KiCad is a real windfall for the creative electronics fans among you. It thus becomes possible to create, exchange and modify schematics and printed circuit board designs at will. No more searching for a jack connector with unobtainable placement or 'butchering' a circuit in order to adapt it ever so slightly. With KiCad, you have total freedom, especially if, as we hope, electronic magazines publish more or less finalised versions of schematics and/or PCBs of proposed projects on the Internet, rather than a fixed PDF.

That would signify that anyone and everyone can adapt, convert or even transform them at will (maybe with a simulator in the future?... But hush! nothing has been done on that yet!).

Better yet, be assured that in case of problems, help will be available to you rapidly on the user's forum (link [3]).

(060373-I)

A Electrical Safety

In all mains-operated equipment certain important safety requirements must be met. The relevant standard for most sound equipment is Safety of Information Technology Equipment, including Electrical Business Equipment (European Harmonized British Standard BS EN 60950:1992). Electrical safety under this standard relates to protection from

- a hazardous voltage, that is, a voltage greater than 42.4 V peak or 60 V d.c.;
- a hazardous energy level, which is defined as a stored energy level of 20 Joules or more or an available continuous power level of 240 VA or more at a potential of 2 V or more;
- a single insulation fault which would cause a conductive part to become hazardous;
- the source of a hazardous voltage or energy level from primary power;
- secondary power (derived from internal circuitry which is supplied and isolated from any power source, including d.c.)

Protection against electric shock is achieved by two classes of equipment.

Class I equipment uses basic insulation ; its conductive parts, which may become hazardous if this insulation fails, must be connected to the supply protective earth.
Class II equipment uses double or reinforced insulation for use where there is no provision for supply protective earth (rare in electronics – mainly applicable to power tools).

The use of a a Class II insulated transformer is preferred, but note that when this is fitted in a Class I equipment, this does not, by itself, confer Class II status on the equipment.

Electrically conductive enclosures that are used to isolate and protect a hazardous supply voltage or energy level from user access must be protectively earthed regardless of whether the mains transformer is Class I or Class II.

Always keep the distance between mains-carrying parts and other parts as large as possible, but never less than required.

If at all possible, use an approved mains entry with integrated fuse holder and on/off switch. If this is not available, use a strain relief (Figure, note 2) on the mains cable at the point of entry. In this case, the mains fuse should be placed after the double-pole on/off switch unless it is a Touchproof® type or similar. Close to each and every fuse must be affixed a label stating the fuse rating and type.

The separate on/off switch (Figure, note 4), which is really a 'disconnect device', should be an approved doublepole type (to switch the phase and neutral conductors of a single-phase mains supply). In case of a three-phase supply, all phases and neutral (where used) must be switched simultaneously. A pluggable mains cable may be considered as a disconnect device. In an approved switch, the contact gap in the off position is not smaller than 3 mm.
The on/off switch must be fitted by as short a cable as possible to the mains entry point. All components in the primary transformer circuit, including a separate mains fuse and separate mains filtering components, must be placed in the switched section of the primary circuit. Placing them before the on/off switch will leave them at a hazardous voltage level when the equipment is switched off.

If the equipment uses an open-construction power supply which is not separately protected by an earthed metal screen or insulated enclosure or otherwise guarded, all the conductive parts of the enclosure must be pro-

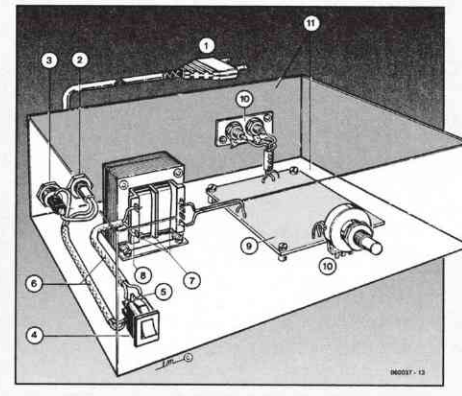

1 Use a mains cable with moulded-on plug.
2 Use a strain relief on the mains cable.
3 Affix a label at the outside of the enclosure near the mains entry stating the equipment type, the mains voltage or voltage range, the frequency or frequency range, and the current drain or curent drain range.
4 Use an approved double-pole on/off switch, which is effectively the 'disconnect device'.
5 Push wires through eyelets before soldering them in place.
6 Use insulating sleeves for extra protection.
7 The distance between transformer terminals and core and other parts must be ≥6 mm.
8 Use the correct type, size and current-carrying capacity of cables and wires – see table on the next page.
9 A printed-circuit board like all other parts should be well secured. All joints and connections should be well made and soldered neatly so that they are mechanically and electrically sound. Never solder mains-carrying wires directly to the board: use solder tags. The use of crimp-on tags is also good practice.
10 Even when a Class II transformer is used, it remains the on/off switch whose function it is to isolate a hazardous voltage (i.e., mains input) from the primary circuit in the equipment. The primary-to-secondary isolation of the transformer does not and can not perform this function.

tectively earthed using green/yellow wire (green with a narrow yellow stripe – do not use yellow wire with a green stripe). The ear th wire must not be daisychained from one part of the enclosure to another. Each conductive part must be protectively ear thed by direct and separate wiring to the primary ear th point which should be as close as possible to the mains connector or mains cable entry. This ensures that removal of the protective earth from a conductive par t does not also remove the protective earth from other conductive parts.

Pay particular attention to the metal spindles of switches and potentiometers: if touchable, these must be protectively earthed. Note, however, that such components fitted with metal spindles and/or levers constructed to the relevant British Standard fully meet all insulation requirements.

The temperature of touchable parts must not be so high as to cause injury or to create a fire risk.

Most risks can be eliminated by the use of correct fuses, a sufficiently firm construction, correct choice and use of insulating materials and adequate cooling through heat sinks and by extractor fans.

The equipment must be sturdy: repeatedly dropping it on to a hard surface from a height of 50 mm must not cause damage. Greater impacts must not loosen the mains transformer, electrolytic capacitors and other important components.

Do not use dubious or flammable materials that emit poisonous gases.

Shorten screws that come too close to other components.

Keep mains-carrying parts and wires well away from ventilation holes, so that an intruding screwdriver or inward falling metal object cannot touch such parts.

3-core mains cable to BS6500 1990 with three stranded conductors in thick PVC sheath			
Max. current	3 A	6 A	13 A
Conductor size	16/0.2 mm	24/0.2 mm	40/0.2 mm
Nom. cond. area	0.5 mm^2	0.75 mm^2	1.25 mm^2
Overall cable dia.	5.6 mm	6.9 mm	7.5 mm
Insulated hook-up wire to DEF61-12			
Max. current	1.4 A	3 A	6 A
Max. working voltage	1000 V rms	1000 V rms	1000 V rms
PVC sheath thickness	0.3 mm	0.3 mm	0.45 mm
Conductor size	7/0.2 mm	16/0.2 mm	24/0.2 mm
Nom. cond. area	0.22 mm^2	0.5 mm^2	0.95 mm^2
Overall wire dia.	1.2 mm	1.6 mm	2.05 mm
3-flat-pin mains plug to BS 1363A			

As soon as you open an equipment, there are many potential dangers. Most of these can be eliminated by disconnecting the equipment from the mains before the unit is opened. But, since testing requires that it is plugged in again, it is good practice (and safe) to fit a residual current device (RCD, sometimes called residual current breaker – RCB – or residual circuit current breaker –RCCB), rated at not more than 30 mA to the mains system (sometimes it is possible to fit this inside the mains outlet box or multiple socket).

These guidelines have been drawn up with great care by the editorial staff of Elektor magazine. However, the publishers do not assume, and hereby disclaim, any liability for any loss or damage, direct or consequential, caused by errors or omissions in these guidelines, whether such errors or omissions result from negligence, accident or any other cause.

B Contents A...Z

!

10,000 × with One Transistor 227
12 V Bidirectional Motor Control 341
12 V Fan Directly on 230 V 198
123 Game - all MCU-free 66
1-Wire Thermometer with LCD 101
22-bit A/D Converters 241
2.4 GHz Antenna for Robotic Vehicles 418
3 Amp PWM DC Motor Controller 446
3-A Wide-input Adjustable Switching Regulator 343
48-V Microphone Supply 13
84×48-pixel Graphics Display 276
89LPC9xx USB Programming 183

A

Active Antenna 108
Active Rectifier 121
A/D Converter for Robots 462
Adjustable Current Limit for Dual Power Supply 54
Alternative Halogen Supply 87
An Inclinometer for your Robot 386
An Obstacle Detecting Robot 374
Antenna Height and Range 190
Antieu-robot 345
A Robot that won't Lose its Bearings 421
A Robot with an Elephant's Memory 371
Assistance for BASCOM Programmers 315
Attitude Sensor 327
Audible Flasher Warning 144
Automatic Car Battery Charger 78
Automatic Range Hood 208
Automatic Range Switching 257
Automatic S/PDIF Selector 142
Automatic Windshield Washer Control 129
Auto-off for Audio Gear

B

Babybot 383
Balancing Robot 367
Bat's Ear 524
Battery Discharge Meter 27
Battery Saver 271
BBC Radio-MP3 for Seniors 85
Bell Alarm 88

Bicycle Speedometer with Hub Dynamo 15
Binary Clock 307
Bolo 399

C
Call Acknowledged! 255
Camera = Data Store 44
Car & Motorcycle Battery Tester 300
Catapult for Robots... or Other Uses 389
Chaotic LED Fireflies 348
Charlieplexing 39
Cheap 12 V/230 V Invertor 259
Cigarette-lighter Battery Charger 156
Clap Controlled Switcher 385
CMUCam1 Vision System 458
Colour Tamer 420
Compass Sensor for Lego Mindstorms NXT 478
Complete Stepper Motor Driver 405
Computer Off Switch 22
Contrast Control for LCDs 52
Controlling Servos 486
CO Sensor 496

D
DC-coupled Audio Amplifier 49
DCF77 Preamplifier 44
Deep Discharge Protection for Rechargeable Cells 449
Delphi Floating Strings 338
Deluxe '123' Game 182
Design for Märklin Light Signals 264
Detector with Amplification 226
Digital Rev Counter for (Older) Diesels 135
Dimmable LED Light 203
Direction Sensitive Light Barrier 199
Direction-sensitive Light Barrier 328
Discrete PWM generator 173
Discrete Robot 332
DIY Wheels 532
Driver for 20 LEDs 141
Driving Higher Power DC Motors 510
Driving Stepper Motors 530
Driving Stepper motors: KISS 351
DRM Receiver Upgrade 147
DTMF-controlled Home Appliance Switcher 19
Dual Battery 396

E
Earth Fault Indicator 310
Easy Home Remote Control 45
E-blocks = cheaper PLC design 287
Eight-channel Scope Input 111
Electronic Torricelli Barometer 26
Electronic Touch Switch 105
Energy-efficient Backlight 244
Environmentally-friendly Mosquito Repeller 215
Expansion for Universal Interface 155

F
Fast Charger for NiMH Batteries 493
Five-output Video Distribution Amplifier 104
Flowcode for Garden Lighting 11
FL Twilight Switch 273
FM Microbug 86
Fog Lamp Sensor 150
Fog Lamp Switch 303
Football with Robots 528
Formula Flowcode Buggy 439
From Cassette Recorder to Robot Propulsion 515
Fuse Saver 180

G
Gas Flow Meter 201
Geiger Counter 150
Gentle Breeze 178
Golf Tally 254
GPS Receiver 73
Gratis Symmetrical Opamp Supply Voltages 306

H
Hard Disk Switch 114
Hard-Wired Code Lock 172
Harmonic Generator with Single Opamp 60
High-intensity LED Warning Flasher 25
High-voltage Regulator with Short Circuit Protection 126
How to! connect your project to the PC 124
Hunter 413
Hybrid Headphone Amp 158
Hyper-Simple Battery Capacity Tester 250

I
Increased Range for DVM 12
Indicator for Weller Soldering Stations 83
Intelligent Interface for 1 to 8 Servos 161
Intelligent Presence Simulator 163
IR Close Object Detector 349
IR Communications using a UART 438
IR Remote Control Tester 273
IR Remote Control with the R8C 346
IR Telemeter 507
ISO Standard for Car Radios 234

K
KiCad: a High-Level Tool 533

L
Lamp in a Wine Bottle 238
Laser Alarm 120
LDO Regulator with Soft Start or Tracking 411
LED Phototherapy Unit 192
LED Spinning Top 228
LED Switching Regulator 194
LED Tester 82
LED Thermometer 325
Light Gate with Counter 338
Lighting Governor 304
Light-seeking Robot 520
Light Sensing with an LED 490
LiPo Manager 262
Lithium Charger 465
LM35 to ADC 311
Logic Goats 293
Low Cost USB Demo Board 393
Low Loss Step Down Converter 266
Low-Voltage Step Down Converter 274
LPC900 Programmer 407

M
Magnetic Flip-Flop 160
Mains Indicator 323
Mains Slave Switcher I 97
Mains Slave Switcher II 248
Measuring Battery Charge 319
Microlight Fuel Gauge 217
Miller Capacitor 63
Mini Bench Supply 166
Mini High-voltage Generator 179
Minimalist Oscilloscope 53
Minimalist Motor 364
Mini Power Inverter 363
Mobile Phone Data Cable = Interface Converter 125
Model Railway Turnout Control 77
Modulated Light Barrier 236
MotoBox 424
Multicolour Flashing LED 216
Multicolour HD LED 304
Multimedia RIAA Preamplifier 34
Multimeter as Lightning Detector 128
Multi-purpose NiCd & NiMH Charger 517
Multitasking Pins 237
Mysterious Self Charging 295

N
New KW1281 Interface 230
New Lego Mindstorms NXT Motor Block 403

O
On/off Infrared Remote Control 240
Opamp VHF FM Transmitter 17
Operating Hour Counter 37
Optical Pulse Generator 69

Optimised STK200/300 Programmer 505
Outside Light Controller 251
Overheat Detector Alarm/Switch 523

P
Paralleling LiPo Batteries 435
Paraphase Tone Control 282
Phantom Supply for TV Antenna 40
Philips ME Construction Kits 469
Phono Splitter 224
PIC Indicator Relay 377
PIC12C508 Stepper Motor Controller 497
Piezo-powered Lamp 48
Pipe Descaler 134
PIR Sensor 514
Pitch Meter for Model Helicopters 106
Play the Guitar – Recycle Tip 68
Portable Thermometer 294
Positioning with Photodiode Arrays 501
Post-box Monitor 35
Power MOSFET Bridge Rectifier 232
Power Supply for USB Devices 335
PR4401/02 off the Beaten Track 176
Presence Simulator 32
Preset Circuit for Servos 252
Programmable Servo Driver 145
Programmer Board for the R8C/13 41
Programming the Propeller IC 284
Propeller Prototyping Board for BoeBot 378
Protection for Telephone Line 165
Pseudo-random Glitter 90
Put that Light Out! 111
PWM Control for Permanent Magnet Motors 239
PWM Voltage Dropper 489

Q
Quad Power Supply for Hybrid Amp 23

R
R8CKey 242
R8C Measures Negative Voltages 453
Radio Control Signal Frame-rate Divider 193
Radio Remote Control for PDAs and Smartphones 401
RC Mains Sockets with Feedback 296
RC Servo Tester/Exerciser 169
RC Switch 317
Reaction Race using ATtiny13 33
Rear Fog Lamp for Vintage Cars 197
Receiver for RC5 Remote Controls 483
Recycling Flasher Lights 313
Remote Control Mains Switch 186
Removed Pulse Detector 452
RFID Door Opener 152
RGB Lights 275
Robot Footballer 464
Robot MOPS 436
Robot Voice 384

S
Satnav for Robots 430
SCSI Adapter 80
Sensor for Line Following Robots 340
Serial Interface for the Propeller 448
Serial to Bluetooth 82
Servo Control 270
Servo Control from a PC 526
Servo to Motor Conversion 480
Simple Audio Power Meter 196
Simple Capacitive Touch Sensor 129
Simple D/A Converter for Robots 500
Simple Hybrid Amp 204
Simple LED Bike Light 247
Simple Li-Ion Battery Charger 335
Simple One-wire Touch Detector 191
Simple Slave Flash 281
SimpleProg 209
Simple USB AVR-ISP Compatible Programmer 113
Simulation Applets 265
Slave Flash Trigger I 63
Slave Flash Trigger II 131
Slug Repellent 71
Smart Chocolate Block 320
SMD Crystal Adapter 139
SMD Soldering Aid 336
Smooth Flasher 171
Software-defined Valve Radio 133
Solar Cell Array Charger with Regulator 16
Solar Cell Voltage Regulator 299
Solar Lamp using the PR4403 272
Solar Powered Automatic Lighting 212
Solar Powered Battery Charger 115
Solar Powered Uninterruptible PSU 188
Sound Activated Switch 513
Step Down Converter Controller 291
Stepped Volume Control 495
Stepper Motor Controller 174
Speed Pulse Generator for PC Fans 89
Stereo Robot Ears 471
Stroboscope with Trigger Input 119
Switch-Mode 555 Supply 482

T
'TEAclipper' Postage-stamp Programmer 342
Telephone Ringer 302
Temperature Sensitive Switch for Solar Collector 245
Temperature Sensor with 2-Wire Interface 297
Temperature Switch 65
Tent Alarm 50
The Gentle Touch 207
The OC171 Mystery (solved) 285
Thrifty 2-Hz Clock 333
Thrifty LED Protector 117
Thunderstorm Predictor 221
Tiny RGB 36
Tiny Simon 322
Toothbrush Timer 268
Torque is Cheap 467
Tracking Solar Panel 95
Transcutaneous Electrical Nerve Stimulator (TENS) 214
Trembly 366
TriBot 450
Turbo BDM Lite ColdFire Interface 223
TV Muter 185

U
Ultrasonic Distant Obstacle Detector 485
Underwater Magic 56
Universal LCD Module 92
Universal Thermostat 288
USB Converter 503
USB Fuse 210
USB/RS232 Cable 61
USB Standby Killer 140
USB Switch for Printers 262

V
Video Isolator 231
Voltage Regulator Design 334
Voltage Stabiliser 382

W
Walking Works! 455
Which Brain for my Robot? 353
Whiskers on Robots 444
Wireless Audio Transmitter 99
Wireless Pulse Sensor 404

Z
zBot: 10-A Power Stage 492
zBot: Solar/Battery Power Supply 506
zBot: Wireless Link 523
ZigBee Switching for Remote Control 301
ZigBee-based Wireless Motion Sensor 279



مراکز پخش:

۱ـ تهران، خیابان انقلاب، روبروی دانشگاه تهران، ابتدای خیابان ۱۲ فروردین، پلاک ۳۲۴، کتابفروشی هنر

تلفن: ۶۶۴۹۲۲۴۲

۲ـ تهران، خیابان انقلاب، روبروی دبیرخانه دانشگاه تهران، ساختمان جیبی، پلاک ۱۴۶۲، کتابفروشی عصر دانش

تلفن: ۶۶۹۷۱۲۵۱